**KUPIT-SHTABELER.RU**

# AMEISE PTE 1.1 Li-Ion

## Руководство по эксплуатации серии

Английский, историческая редакция 03.20

Серийная справочная инструкция PTE 1.1 из объединённого руководства PTE 1.1/PTE 1.5. Она не является размерным паспортом исполнения с вилами 800 мм. В оригинале сохранены также разделы PTE 1.5, их оснащение нельзя приписывать PTE 1.1.

### Контакты продавца

kupit-shtabeler.ru
zakaz@kupit-shtabeler.ru
+7 495 159-44-32

Магнитный ключ PTE 1.1 не заменяется клавиатурой другой модели. Размеры, массу, аккумулятор и зарядное устройство конкретной поставки проверяют отдельно по её маркировке и документам.

Со следующей страницы сохранены все оригинальные страницы изготовителя в исходном порядке. Технические указания, предупреждения, сведения об изготовителе и импортёре не изменены.

Обложка добавлена продавцом. Этот файл не является заполненным паспортом конкретной единицы, подтверждением её серийного номера, приёмки или сертификации.

# PTE 1.1 Li-Ion /
# PTE 1.5 Li-Ion

Operating instructions

en-GB

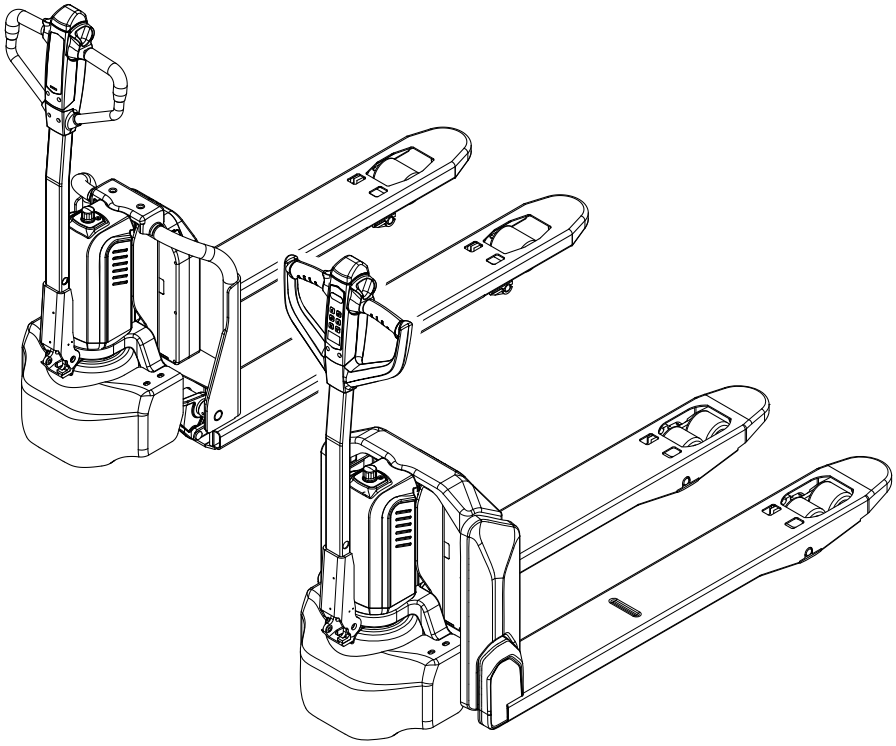

51780448

09.19

03.20

PTE 1.1 Li-Ion
PTE 1.5 Li-Ion

# Declaration of Conformity

**Manufacturer**

Noblelift Intelligent Equipment Co., Ltd., No. 528 Changzhou Road, 313100 Changxing, Huzhou, Zhejiang, People's Republic of China

**Imported by (for all countries except China) / Approved by (for China)**

Jungheinrich AG, Friedrich-Ebert-Damm 129, 22047 Hamburg, Germany

| Type | Option | Serial number | Year of manufacture |
|---|---|---|---|
| PTE 1.1 Li-Ion / PTE 1.5 Li-Ion | | | |

**Additional information**

**By order of**

**Date**

**en-GB EU Declaration of Conformity**

The undersigned hereby declare that the industrial truck described below in detail complies with the European Directives 2006/42/EC (Machinery Directive) and 2004/108/EEC (Electromagnetic Compatibility - EMC) including amendments as well as the legislative decree to transpose the Directives into national law. The signatories are, in each case, individually authorised to create the technical documents.

# Foreword

**Notes on the operating instructions**

The present ORIGINAL OPERATING INSTRUCTIONS are designed to provide sufficient instruction for the safe operation of the industrial truck. The information is presented in a precise and clear manner. The chapters are arranged by letter and the pages are numbered continuously.

The operating instructions detail different industrial truck models. When operating and checking the industrial truck, make sure that the particular section applies to your truck model.

Our industrial trucks are subject to ongoing development. We reserve the right to alter the design, features and technical aspects of the equipment. No guarantee of particular features of the equipment should therefore be assumed from the present operating instructions.

**Safety notices and text mark-ups**

Safety instructions and important explanations are indicated by the following graphics:

**⚠ DANGER!**

Indicates an extremely hazardous situation. Failure to comply with this instruction will result in severe irreparable injury and even death.

**⚠ WARNING!**

Indicates an extremely hazardous situation. Failure to comply with this instruction may result in severe irreparable injury and even death.

**⚠ CAUTION!**

Indicates a hazardous situation. Failure to comply with this instruction may result in slight to medium injury.

***NOTICE***

Indicates a material hazard. Failure to comply with this instruction may result in material damage.

➔ Used before notices and explanations.

| | |
|---|---|
| ● | Indicates standard equipment |
| ○ | Indicates optional equipment |

**Copyright**

Copyright of these operating instructions remains with JUNGHEINRICH AG.

**Jungheinrich Aktiengesellschaft**

Friedrich-Ebert-Damm 129
22047 Hamburg - Germany

Tel: +49 (0) 40/6948-0

www.jungheinrich.com

# Contents


A Correct Use and Application ..... 11

1 General ..... 11
2 Correct application ..... 11
3 Approved application conditions ..... 11
4 Proprietor responsibilities ..... 12
5 Adding attachments and/or optional equipment ..... 13
6 Removal of components ..... 13
7 Wind loads ..... 13

B Truck Description ..... 15

1 Application ..... 15
2 Travel direction definition ..... 16
3 Assemblies and Functional Description ..... 17
3.1 Assembly Overview ..... 17
3.2 Functional Description ..... 19
4 Technical Specifications ..... 21
4.1 Dimensions ..... 21
4.2 Performance data ..... 24
4.3 Battery ..... 25
4.4 Battery charger ..... 26
4.5 Weights ..... 26
4.6 Tyre type ..... 26
4.7 Engine Data ..... 27
4.8 EN norms ..... 27
4.9 Electrical Requirements ..... 27
5 Identification points and data plates ..... 28
5.1 Data plate ..... 30

C Transport and Commissioning ..... 31

1 Lifting by crane ..... 31
2 Transport ..... 33
3 Using the Truck for the First Time ..... 34
4 Changing the Access Code ..... 35
5 Mounting the tiller ..... 36

D Battery - Servicing, Recharging, Replacement ..... 39

1 Description of the lithium-ion battery ..... 39
2 Battery Decals ..... 40
2.1 Battery data plate ..... 41
2.2 Battery serial number ..... 41
3 Safety Instructions, Warning Indications and other Notes ..... 42
3.1 Safety regulations for handling lithium-ion batteries ..... 42
3.2 Potential hazards ..... 44
3.3 Battery lifetime and maintenance ..... 51
3.4 Charging the battery ..... 52
3.5 Storage / safe handling / faults ..... 53
3.6 Disposal and transport of a lithium-ion battery ..... 54

3.7 Hazard and Safety Instruction Phrases ... 57
4 Charging the battery ... 59
4.1 Correct Use and Application ... 59
4.2 Charge Status Indicator ... 60
4.3 Charging the Battery with External Charger ... 62
5 Battery removal and installation ... 64
5.1 Removing the battery ... 64
5.2 Battery installation ... 65

E Operation ... 67

1 Safety Regulations for the Operation of Forklift Trucks ... 67
2 Displays and Controls ... 69
2.1 Controls ... 69
2.2 Display symbols ... 73
3 Starting up the truck ... 74
3.1 Checks and operations to be performed before starting daily operation 74
3.2 Preparing the truck for operation ... 75
3.3 Parking the truck securely ... 77
4 Industrial Truck Operation ... 78
4.1 Safety regulations for truck operation ... 78
4.2 Emergency Disconnect ... 80
4.3 Brakes ... 81
4.4 Travel ... 83
4.5 Slow travel ... 84
4.6 Steering ... 85
4.7 Lifting, transporting and depositing loads ... 86
5 Troubleshooting ... 90
5.1 Troubleshooting ... 90
5.2 Faults and Error Messages ... 92
6 Operating the truck without its own drive system ... 97

F Industrial Truck Maintenance ... 99

1 Spare Parts ... 99
2 Operational Safety and Environmental Protection ... 99
3 Maintenance Safety Regulations ... 101
4 Lubricants and Lubrication Schedule ... 104
4.1 Handling consumables safely ... 104
4.2 Lubrication Schedule ... 106
4.3 Consumables ... 107
5 Maintenance and repairs ... 108
5.1 Preparing the truck for maintenance and repairs ... 108
5.2 Lifting and jacking up the truck safely ... 109
5.3 Removing the Covers ... 111
5.4 Cleaning ... 113
5.5 Checking the drive wheel and load wheels ... 115
5.6 Checking electrical fuses ... 116
5.7 Checking the hydraulic oil level ... 117
5.8 Restoring the truck to service after maintenance and repairs ... 118
6 Decommissioning the industrial truck ... 118
6.1 Prior to decommissioning ... 118
6.2 Action to be taken during decommissioning ... 119
6.3 Restoring the truck to service after decommissioning ... 119

7 Safety tests to be performed at intervals and after unusual incidents..... 119
8 Final de-commissioning, disposal..... 119

G Maintenance, Inspection and Changing of Maintenance Parts Requiring Replacement..... 121

1 Maintenance Contents PTE 15N..... 122
1.1 Owner..... 122
1.2 Customer Service..... 124
2 Maintenance Contents PTE 1.1..... 128
2.1 Owner..... 128
2.2 Customer Service..... 130

# A Correct Use and Application

## 1 General

The truck must be used, operated and serviced in accordance with the present instructions. All other types of use are beyond its scope of application and may result in damage to personnel, the industrial truck or property.

## 2 Correct application

***NOTICE***

The maximum load and load distance are indicated on the capacity plate and must not be exceeded.
The load must rest on the load handler.
The load must be fully raised, see page 86.

The following operations are in accordance with regulations and are permitted:
– Lifting and lowering loads.
– Transporting lowered loads.

The following operations are prohibited:
– Carrying and lifting passengers.
– Pushing or pulling loads.

## 3 Approved application conditions

**⚠ WARNING!**

**Operation under extreme conditions**

Using the system under extreme conditions can result in malfunctions and accidents.

▶ Usage under extreme conditions, in particular in very dusty or corrosive environments, is not permitted.

▶ Use in potentially explosive atmospheres is prohibited.

**The following operating conditions apply for PTE 1.1 Li-Ion and PTE 1.5 Li-Ion:**

- Operation in industrial and commercial environments.
- Use only on secure surfaces with sufficient capacity.
- Do not exceed the permissible surface and point load limits on the travel paths.
- Use only on travel paths that are visible and approved by the operating company.
- Slopes of max. 4 % may be negotiated with load, and 16 % without load.
- Do not travel across or at an angle on inclines. Travel with the load facing uphill.
- Minimum illumination level of the traffic lanes 50 Lux.

**There are differences with the following operating conditions:**

| Operating conditions | PTE 1.1 Li-Ion | PTE 1.5 Li-Ion |
|---|---|---|
| Use indoors | Yes | Yes |
| Use outdoors | No | Yes |
| Use on level surfaces | Yes | Yes |
| Use on uneven surfaces | No | Yes |
| Temperature range | +5°C to +40°C | |
| Minimum temperature for brief outdoor use (max. 30 minutes) | - | -20°C |

# 4 Proprietor responsibilities

For the purposes of the present operating instructions the “operating company” is defined as any natural or legal person who either uses the industrial truck himself, or on whose behalf it is used. In special cases (e.g. leasing or renting) the proprietor is considered the person who, in accordance with existing contractual agreements between the owner and user of the industrial truck, is charged with operational duties.
The proprietor must ensure that the industrial truck is used only for the purpose it is intended for and that danger to life and limb of the user and third parties are excluded. Furthermore, accident prevention regulations, safety regulations and operating, servicing and repair guidelines must be followed. The operating company must ensure that all users have read and understood these operating instructions.

***NOTICE***

Failure to comply with the operating instructions invalidates the warranty. The same applies if improper work is carried out on the truck by the customer or third parties without the permission of the manufacturer.

# 5 Adding attachments and/or optional equipment

The mounting or installation of additional equipment which affects or enhances the performance of the industrial truck requires the written permission of the manufacturer. Local authority approval may also need to be obtained.
Local authority approval however does not constitute the manufacturer’s approval.

# 6 Removal of components

It is forbidden to modify or remove truck components, particularly protective and safety equipment.

➔ If in doubt, contact the manufacturer's customer service department.

# 7 Wind loads

Wind forces can affect the stability of a truck when lifting, lowering and transporting loads with large surface areas.

Light loads must be especially secured when they are subjected to wind forces. This will prevent the load from sliding or falling.

Stop the truck in both cases.

# B Truck Description

## 1 Application

The PTE 1.1 Li-Ion / PTE 1.5 Li-Ion is designed to transport goods. It can lift open-bottom or stringer-board pallets beyond the area above the load wheels, as well as roll cages. The capacity is shown on the capacity plate, Qmax.

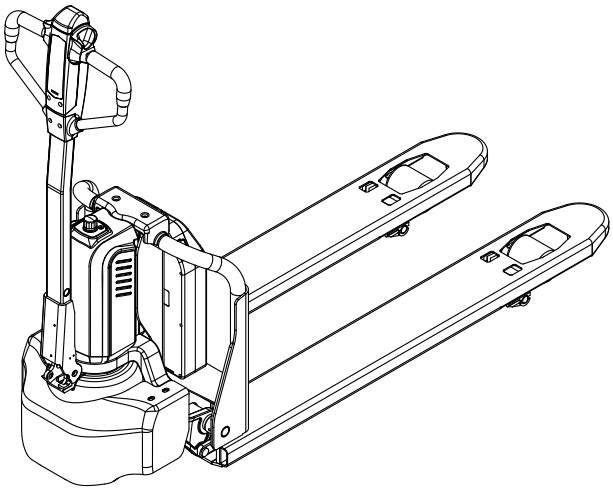

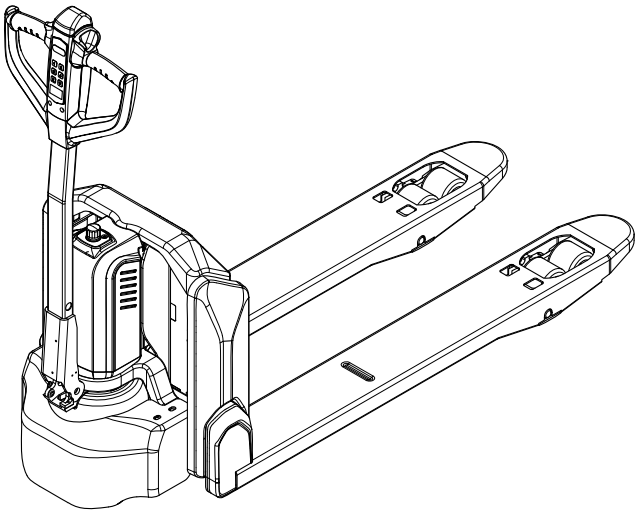

# 2 Travel direction definition

The following determinations have been made for travel direction specification:

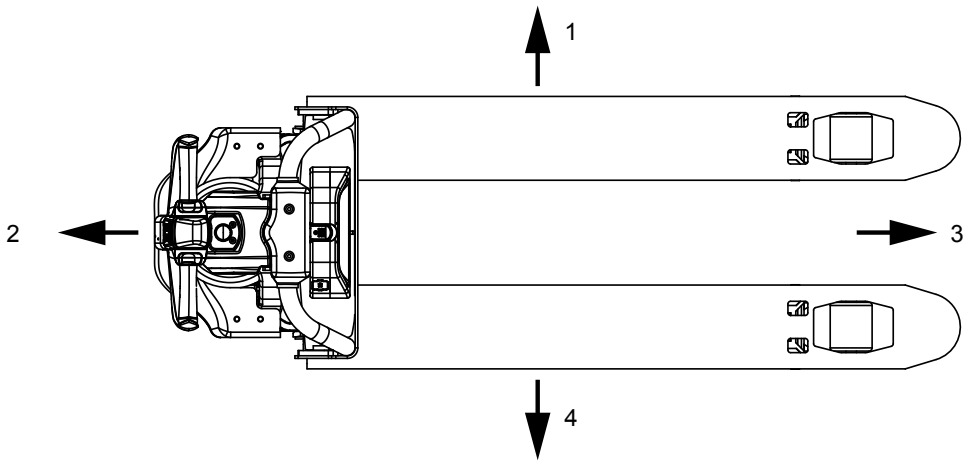


| Item | Travel Direction |
|---|---|
| 1 | Left |
| 2 | Drive direction |
| 3 | Load direction |
| 4 | Right |

# 3 Assemblies and Functional Description

## 3.1 Assembly Overview

### PTE 1.1 Li-Ion

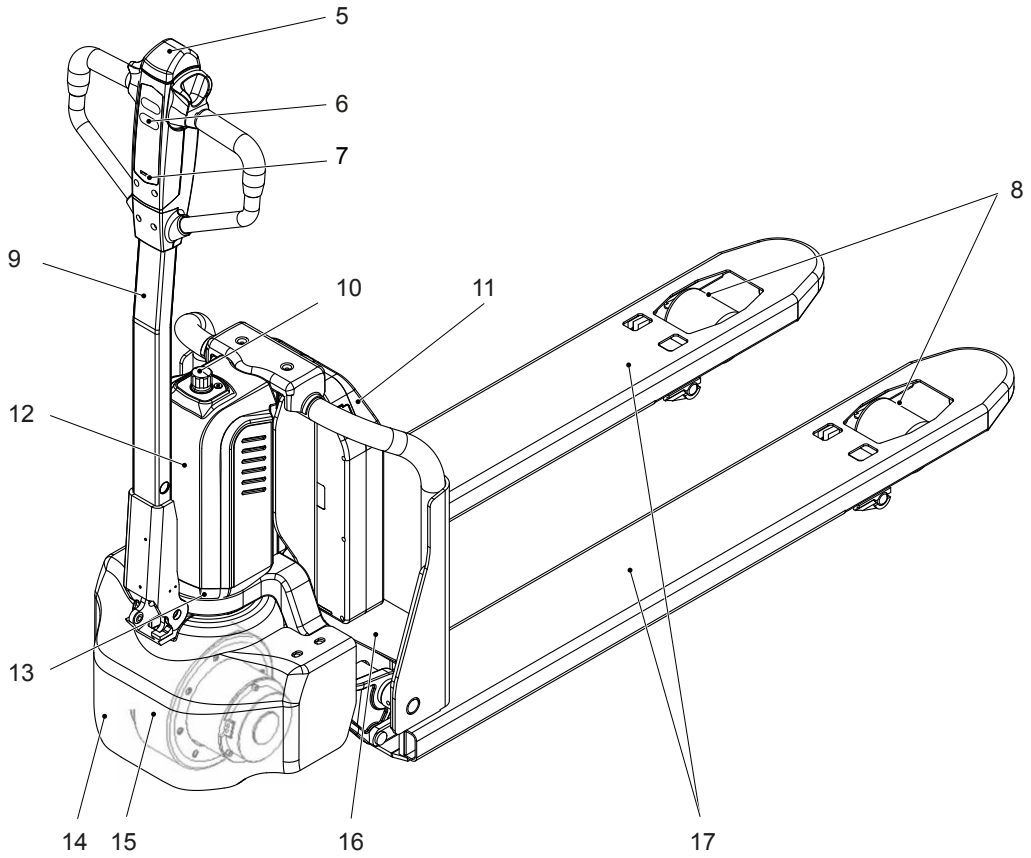


| Item | Description | Item | Description |
|---|---|---|---|
| 5 | Collision safety switch | 12 | Cover for the hydraulic unit and the electrical system |
| 6 | Charge status indicator | 13 | Drive unit |
| 7 | Magnetic lock | 14 | Bumper |
| 8 | Load wheels | 15 | Drive wheel |
| 9 | Tiller | 16 | Load section |
| 10 | Emergency disconnect switch | 17 | Load handler |
| 11 | Battery | | |

## PTE 1.5 Li-Ion

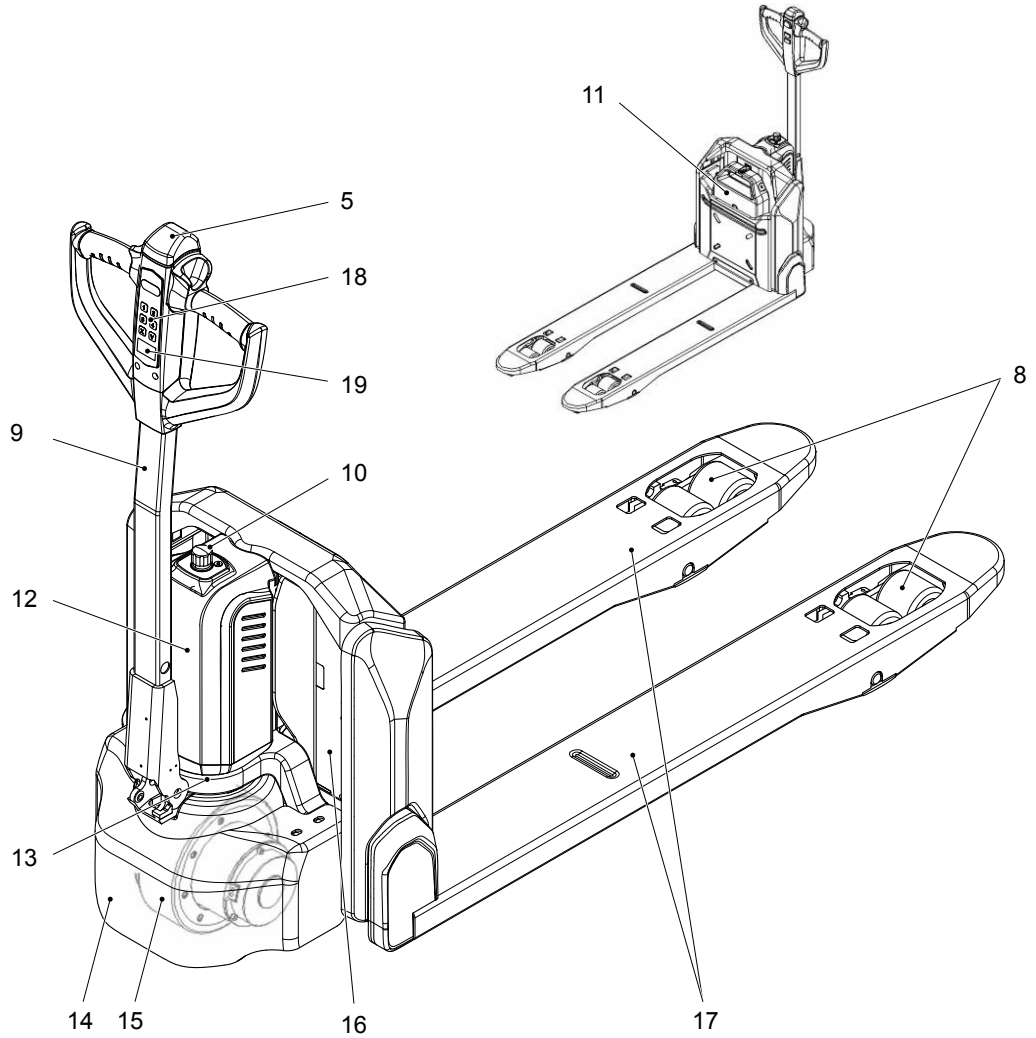


| Item | Description | Item | Description |
|---|---|---|---|
| 5 | Collision safety switch | 14 | Bumper |
| 8 | Load wheels | 15 | Drive wheel |
| 9 | Tiller | 16 | Load section |
| 10 | Emergency disconnect switch | 17 | Load handler |
| 11 | Battery | 18 | Keypad |
| 12 | Cover for the hydraulic unit and the electrical system | 19 | Display unit |
| 13 | Drive unit | | |

## 3.2 Functional Description

**PTE 1.1 Li-Ion: Magnetic lock**

The truck is equipped with a magnetic lock that can be used to start the truck immediately.

**PTE 1.5 Li-Ion: Keypad**

The truck is equipped with a keypad. The truck can only be started if the correct access code is entered via the keypad. This prevents any unauthorised use of the truck.

**Safety equipment**

An enclosed, smooth truck geometry with rounded edges ensures safe handling of the truck. The wheels are surrounded by a solid skirt offering collision protection.

When released, a gas strut pushes the tiller up and activates braking.

When travelling in the drive direction in pedestrian mode, the red collision safety switch changes the travel direction if the truck comes into contact with a person. The truck brakes, travels away from the operator and stops. This prevents the truck driving into the operator.

Activating the emergency disconnect switch rapidly cuts out all electrical functions in hazardous situations.

**Emergency disconnect switch**

The truck is equipped with an emergency disconnect switch. When it is pressed, all lifting and lowering operations are stopped and the fail-safe electromagnetic brake is activated, see page 80.

**Operator position**

All travel and lift operations can be performed without having to reach.

**Hydraulic system**

Pressing the lifting button starts the pump unit, supplying hydraulic oil from the oil reservoir to the lift cylinder. Pressing the lifting button raises the load handler at a constant speed; pressing the lowering button lowers the load handler.

**Drive system**

An electric motor actuates the drive wheel directly. The electric traction controller ensures smooth drive motor speed control and hence smooth travel, powerful acceleration and electrically controlled braking.

**Steering**

The driver steers with an ergonomic tiller. The drive system can be pivoted +/- 90°.

**Electrical system**

The truck has an electronic traction controller. The truck electrical system operates with a rated operating voltage of 24 V.

## Controls and displays

Ergonomic controls ensure fatigue-free operation for sensitive application of the travel and hydraulic operations.

The display unit shows the operator key information such as operating hours, battery capacity and event messages.

Service hours are counted while the truck is operational and one of the following operations is performed:
– Lifting
– Lowering
– Travel

# 4 Technical Specifications

➔ Technical data specified in accordance with VDI 2189.
Technical modifications and additions reserved.

## 4.1 Dimensions

**PTE 1.1 Li-Ion**

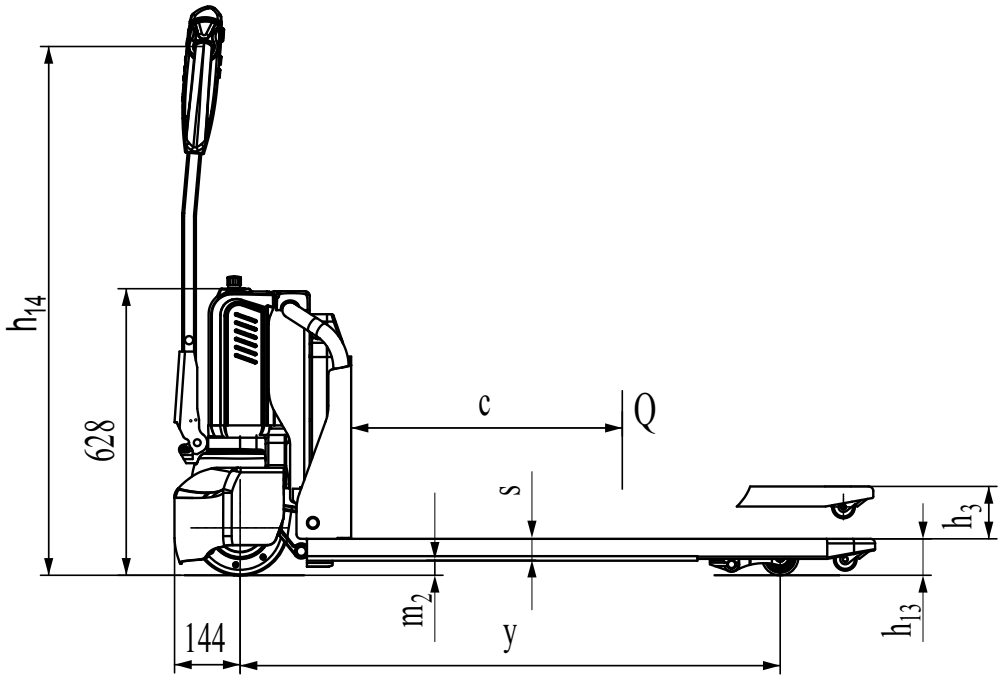


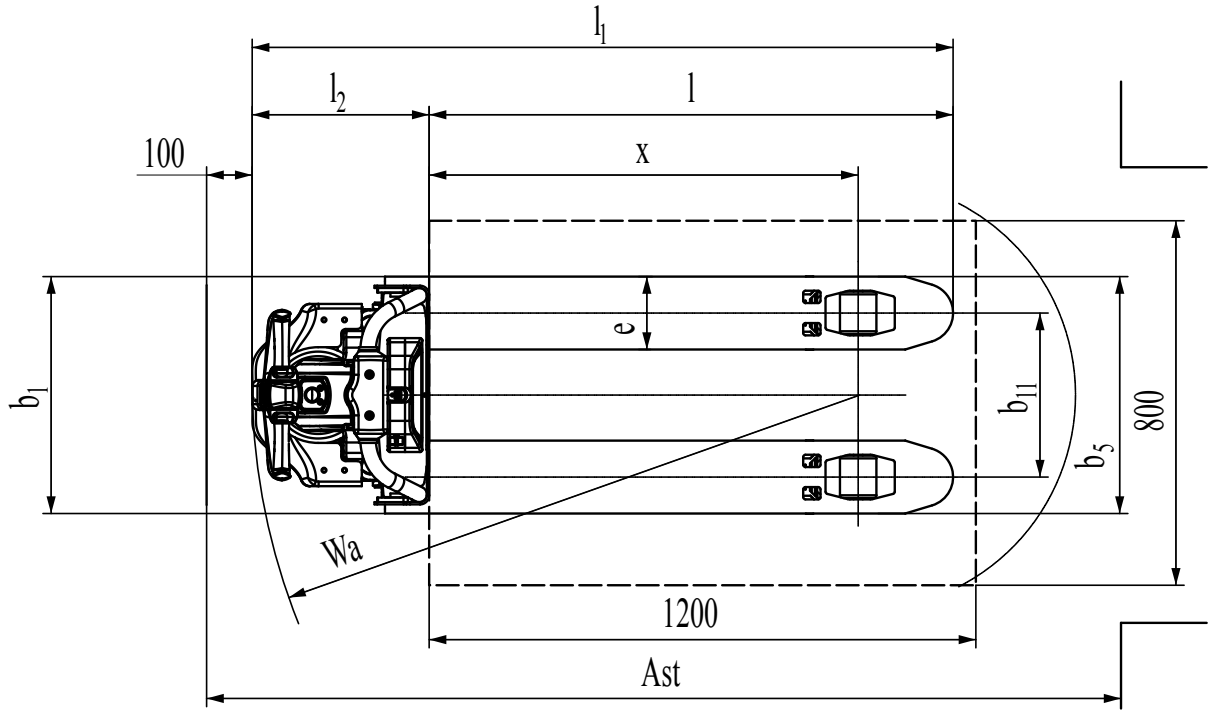

| | Description | PTE 1.1 Li-Ion | | |
|---|---|---|---|---|
| | | **540 (520) x 1150** | **685 x 1150** | |
| c | Load centre distance with standard fork length | 600 | | mm |
| x | Load distance | 942 | | mm |
| y | Wheelbase | 1185 | | mm |
| $b_{10}$ | Track width, front | 420 | | mm |
| $b_{11}$ | Track width, rear | 380 (360) | 525 | mm |
| $h_3$ | Lift | 115 | | mm |
| $h_{14}$ | Tiller height in the travel position min./ max. | 700/1160 | | mm |
| $h_{13}$ | Load handler lowered | 80 | | mm |
| $l_1$ | Overall length | 1537 | | mm |
| $l_2$ | Length to fork face | 387 | | mm |
| $b_1$ | Fork width | 540 (520) | 685 | mm |
| s/e/l | Fork dimensions | 48/160/1150 | | mm |
| $b_5$ | Width across forks | 540 (520) | 685 | mm |
| $m_2$ | Ground clearance, centre of wheelbase | 32 | | mm |
| Ast | Working aisle width, pallets 800x1200 length | 2007 | | mm |
| Wa | Turning radius | 1337 | | mm |

**PTE 1.5 Li-Ion**

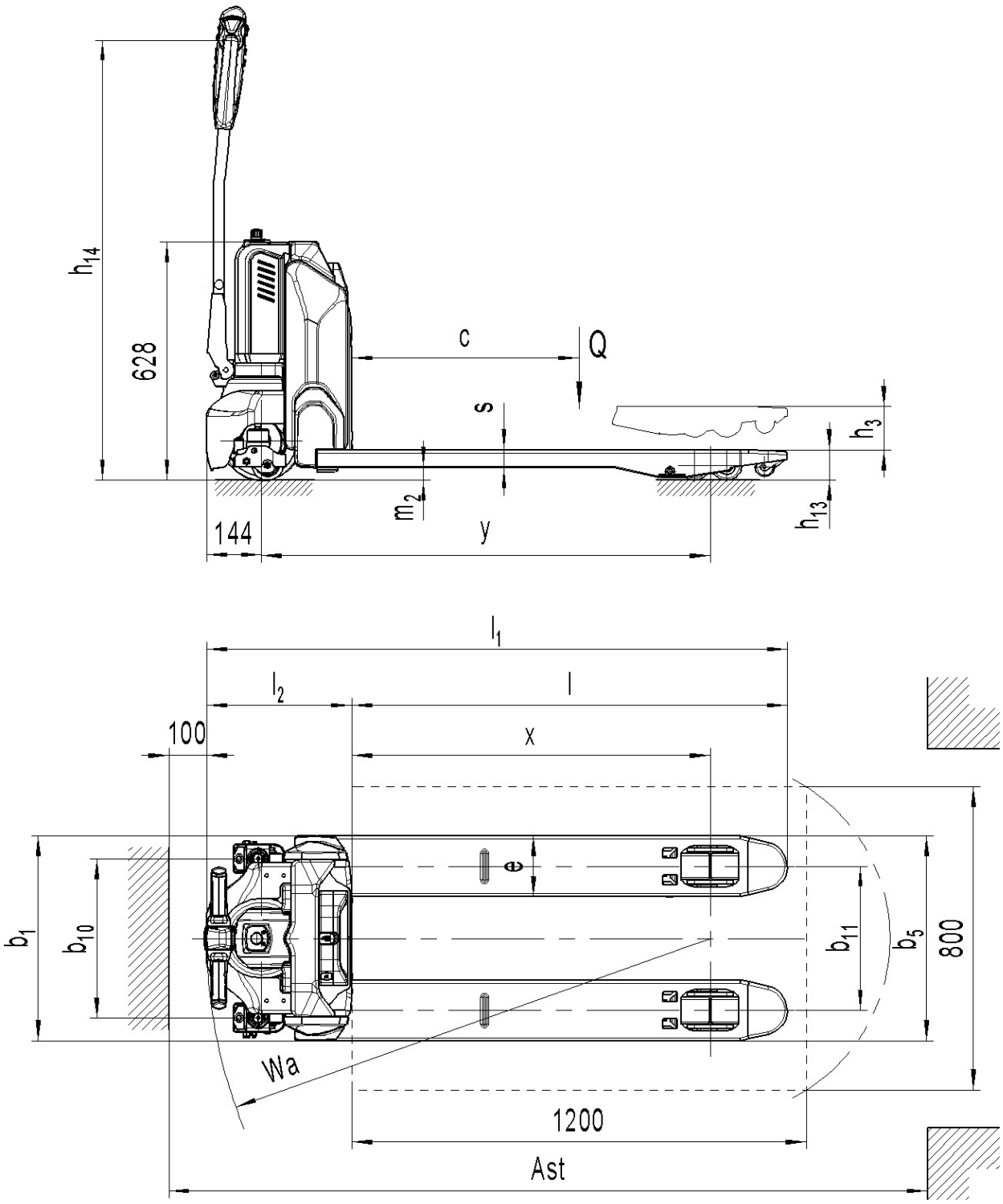
h14
628
c
Q
s
h3
m2
144
y
h13
l1
l2
l
100
x
b1
b10
e
b11
b5
800
Wa
1200
Ast

| | Description | PTE 1.5 Li-Ion | | |
|---|---|---|---|---|
| | | 540x1150 | 685x1150 | |
| c | Load centre distance with standard fork length | 600 | | mm |
| x | Load distance | 947 | | mm |
| y | Wheelbase | 1185 | | mm |
| $b_{10}$ | Track width, front | 420 | | mm |
| $b_{11}$ | Track width, rear | 380 | 525 | mm |
| $h_3$ | Lift | 115 | | mm |
| $h_{14}$ | Tiller height in the travel position min./ max. | 700/1160 | | mm |
| $h_{13}$ | Load handler lowered | 80 | | mm |
| $l_1$ | Overall length | 1530 | | mm |
| $l_2$ | Length to fork face | 380 | | mm |
| $b_1$ | Fork width | 540 | 685 | mm |
| s/e/l | Fork dimensions | 47/160/1150 | | mm |
| $b_5$ | Width across forks | 540 | 685 | mm |
| $m_2$ | Ground clearance, centre of wheelbase | 33 | | mm |
| Ast | Working aisle width, pallets 800x1200 length | 2000 | | mm |
| Wa | Turning radius | 1330 | | mm |

## 4.2 Performance data

| Description | PTE 1.1 Li-Ion | PTE 1.5 Li-Ion | |
|---|---|---|---|
| Rated capacity Q | 1100 | 1500 | kg |
| Travel speed with/without rated load | 4.6/4.8 | 4.6/4.8 | km/h |
| Lift speed with/without rated load | 0.031/0.037 | 0.020/0.025 | m/s |
| Lowering speed with/without rated load | 0.069/0.051 | 0.05/0.04 | m/s |
| Max. gradeability with/without rated load | 4/16 | 4/16 | % |

## 4.3 Battery

The battery used in this truck is a lithium-ion model. This is an environmentally friendly battery without chemical mercury or cadmium.

The truck must only be operated with an approved lithium-ion battery.

| **Technical parameter** | **Battery specification** | |
|---|---|---|
| | **24 V 20 Ah** | **24 V 36 Ah** |
| Rated voltage | 24 V | |
| Rated capacity [1)] | 20 Ah | 36 Ah |
| Weight | 5,0 kg | 7,0 kg |
| Dimensions | 380 x 250 x 71 mm | |
| Standard charging current | 5 A | 8 A |
| Charging temperature | 0°C to +40°C | |
| Discharge temperature | -20°C to 50°C | |
| Storage temperature range | -20°C to 50°C | |

## 4.4 Battery charger

| Model | Specification | Input | Output |
|---|---|---|---|
| SSLC165V29 [1)] | 24 V<br>5 A | 180 V AC - 240 V AC<br>~ 3.0 A max | 29.4 V<br>5.0 A |
| SSLC300V29 [2)] | 24 V<br>8 A (EU) | 180 V AC - 240 V AC<br>~ 3.0 A max | 29.4 V<br>8.0 A |

1) For PTE 1.1 Li-Ion

2) For PTE 1.5 Li-Ion

The permissible temperature range for charging the battery is between 0°C and +40°C.

## 4.5 Weights

| Description | PTE 1.1 Li-Ion | | |
|---|---|---|---|
| | 540 (520) x 1150 | 685 x 1150 | |
| Net weight | 124 | 129 | kg |
| Axle load, laden front/rear | 355/972 | 425/908 | kg |
| Axle load without load front/rear | 101/27 | 106/27 | m/s |

| Description | PTE 1.5 Li-Ion | | |
|---|---|---|---|
| | 540 x 1150 | 685 x 1150 | |
| Net weight | 123 | 126 | kg |
| Axle load, laden front/rear | 623/1000 | 626/1000 | kg |
| Axle load without load front/rear | 96/27 | 99/27 | m/s |

## 4.6 Tyre type

| Description | PTE 1.1 Li-Ion / PTE 1.5 Li-Ion | |
|---|---|---|
| Tyre size, front | ø 210x70 | mm |
| Tyre size, rear | ø 80x93 (ø 80x70) | mm |
| Additional wheels (dimensions) | ø 80x30 | mm |
| Wheels<br>Number front / rear (x = driven) | 1x / 2(1x/4) or<br>1x +2 / 2(x +2/4) | |

## 4.7 Engine Data

| Description | PTE 1.1 Li-Ion / PTE 1.5 Li-Ion | |
|---|---|---|
| Drive motor S2 60 min | 0.65 | kW |
| Lift motor S3 15% | 0.50 | kW |

## 4.8 EN norms

**Continuous sound pressure level**

– PTE 1.1 Li-Ion / PTE 1.5 Li-Ion: < 70 dB(A)

in accordance with EN 12053 as harmonised with ISO 4871.

➔ The continuous sound pressure level is calculated according to standard procedures and takes into account the sound pressure level when travelling, lifting and idling. The sound pressure level is measured at the operator's ear.

**Electromagnetic compatibility (EMC)**

The manufacturer confirms that the truck adheres to the limits for electromagnetic emissions and resistance as well as the static electricity discharge test in accordance with EN 12895 as well as the standardised instructions contained therein.

➔ No changes to electric or electronic components or their arrangement may be made without the written agreement of the manufacturer.

## 4.9 Electrical Requirements

The manufacturer certifies compliance with the requirements for the design and manufacture of electrical equipment, according to EN 1175-1 "Industrial Truck Safety - Electrical Requirements", provided the truck is used according to its purpose.

# 5 Identification points and data plates

## PTE 1.1 Li-Ion

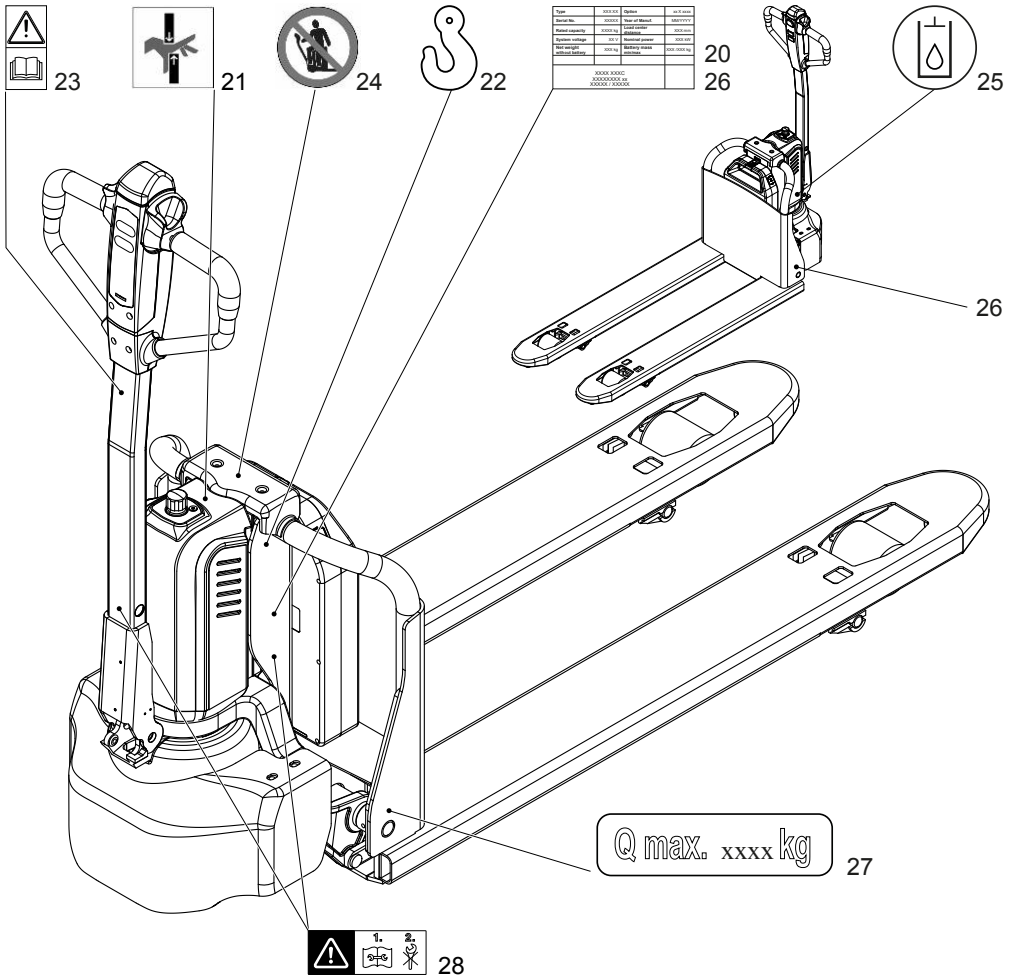


| Item | Description | Item | Description |
|---|---|---|---|
| 20 | Data plate | 25 | Decal: "Add hydraulic oil" |
| 21 | Sign: "Risk of trapping" | 26 | Serial number |
| 22 | Attachment point | 27 | Sign: "Capacity $Q_{max}$" |
| 23 | Sign: "Observe operating instructions" | 28 | Sign: "Observe the operating instructions before performing maintenance work" |
| 24 | Prohibition plate: "No passengers" | | |

## PTE 1.5 Li-Ion

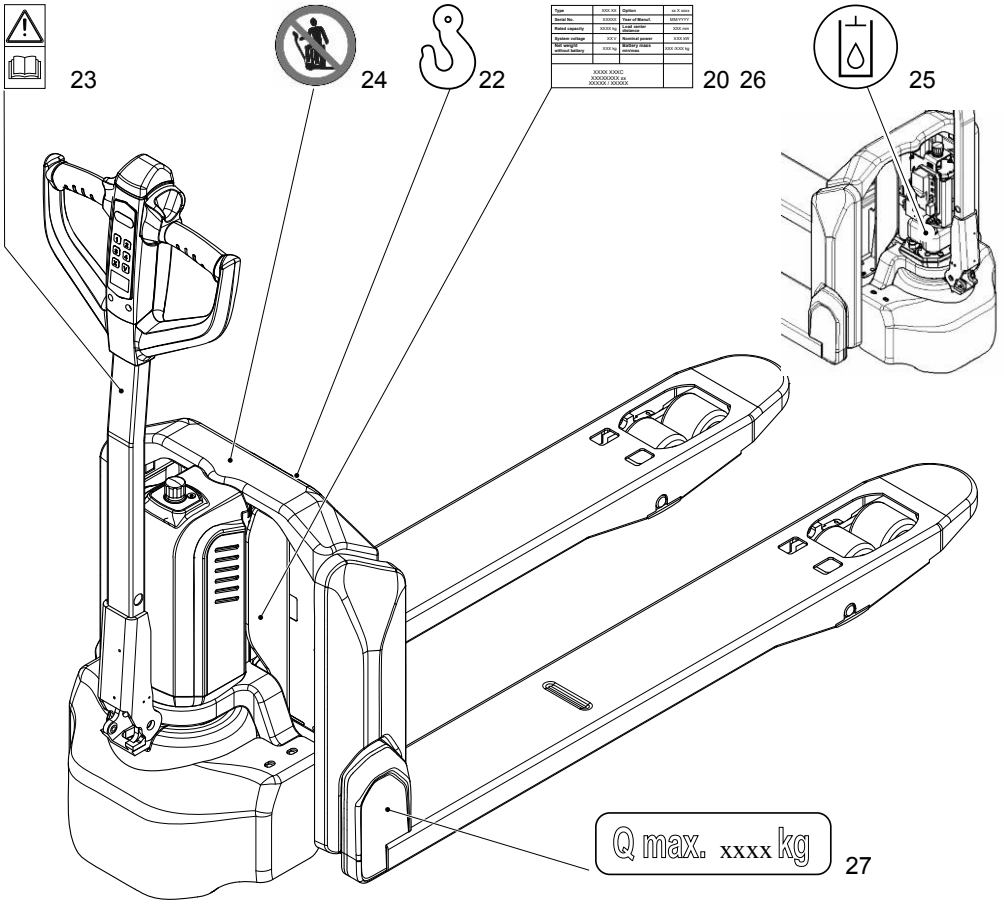


| Item | Description | Item | Description |
|---|---|---|---|
| 20 | Data plate | 25 | Decal: "Add hydraulic oil" |
| 22 | Attachment point | 26 | Serial number |
| 23 | Sign: "Observe operating instructions" | 27 | Sign: "Capacity $Q_{max}$" |
| 24 | Prohibition plate: "No passengers" | | |

## 5.1 Data plate

| | | | | | |
|---|---|---|---|---|---|
| 29 | **Type** | XXX XX | **Option** | xx X xxxx | 30 |
| 31 | **Serial No.** | XXXXX | **Year of Manuf.** | MM/YYYY | 32 |
| 33 | **Rated capacity** | XXXX kg | **Load center distance** | XXX mm | 34 |
| 35 | **System voltage** | XX V | **Nominal power** | XXX kW | 36 |
| 37 | **Net weight without battery** | XXX kg | **Battery mass min/max** | XXX /XXX kg | 38 |
| | | | | | |
| 39 | XXXX XXXC<br>XXXXXXXX xx<br>XXXXX / XXXXX | | | CE | 40 |

| Item | Description | Item | Description |
|---|---|---|---|
| 29 | Type | 35 | Battery voltage [V] |
| 30 | Option | 36 | Rated power [kW] |
| 31 | Serial number | 37 | Net weight excl. battery [kg] |
| 32 | Year of manufacture | 38 | Min./max. battery weight [kg] |
| 33 | Rated capacity [kg] | 39 | Manufacturer and manufacturer address |
| 34 | Load centre distance [mm] | 40 | CE mark |

# C Transport and Commissioning

## 1 Lifting by crane

**⚠ WARNING!**

**All persons involved in loading by crane must be trained**

Incorrect crane loading procedures due to untrained personnel can cause the truck to fall. There is a risk of injury to personnel and a risk of material damage to the truck.

▶ Loading must only be performed by specialist personnel trained for this purpose. The specialist personnel must be instructed in securing loads on road vehicles and handling load securing devices. In each case correct measurements must be taken and appropriate safety measures applied.

---

**⚠ WARNING!**

**Improper loading by crane can result in accidents**

Improper use or use of unsuitable lifting gear can cause the truck to crash when being loaded by crane.

Prevent the truck from hitting other objects during lifting, and avoid uncontrolled movements. If necessary, secure the truck with guide ropes.

▶ The truck may be loaded only by people who are trained in using lifting accessories and lifting gear.

▶ Wear personal protective equipment (e.g. safety shoes, safety helmet, hi-vis jacket, protective gloves) when loading by crane.

▶ Do not stand under suspended loads.

▶ Do not walk into or stand in a hazardous area.

▶ Always use lifting gear with sufficient capacity (for truck weight, see truck data plate).

▶ Always attach the crane lifting gear to the prescribed attachment points and prevent them from slipping.

▶ Use the lifting accessories only in the prescribed load direction.

▶ Crane lifting gear must be fastened in such a way that it does not come into contact with any attachments when lifting.

---

PTE 1.1 Li-Ion

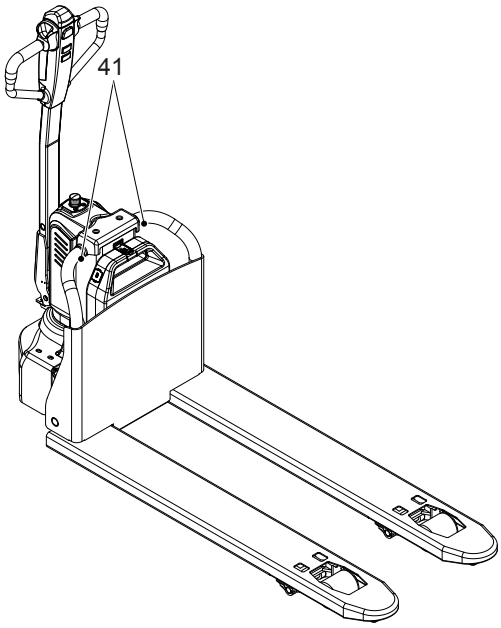


PTE 1.5 Li-Ion

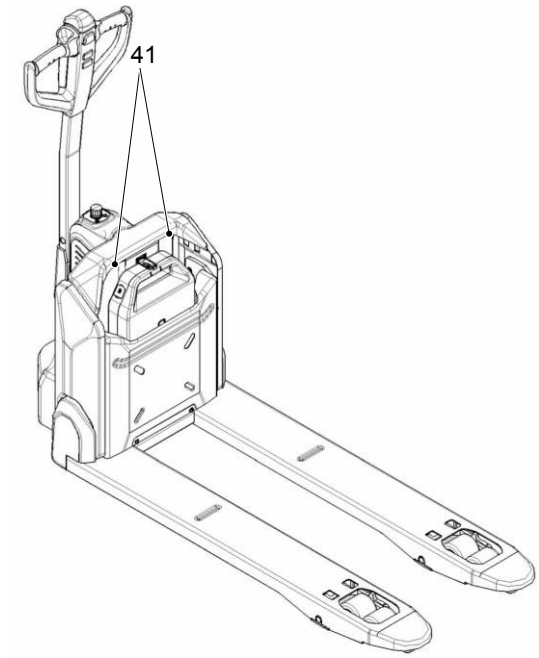


***Loading the truck by crane***

*Requirements*

– Truck parked securely, see page 77.

*Tools and Material Required*

– Lifting gear
– Crane lifting gear

*Procedure*

• Attach the crane lifting gear to the attachment points (41).

*The truck can now be loaded by crane.*

# 2 Transport

**⚠ WARNING!**

**Uncontrolled movement during transport**

Improper fastening of the truck and mast during transport can result in serious accidents.

▶ Loading is only to be carried out by specially trained staff. The specialist personnel must be instructed in the securing of loads on road vehicles and in the use of load-securing equipment. When securing the truck, the appropriate measures must be determined and applied for each individual case.

▶ The truck must be securely fastened when transported on a lorry or a trailer.

▶ The lorry or trailer must have lashing rings.

▶ Use wedges to prevent the truck from moving.

▶ Use only lashing straps with sufficient load rating.

▶ Use anti-slip material to secure loading aids (pallets, wedges,...), e. g. anti-slip mats.

PTE 1.1 Li-Ion

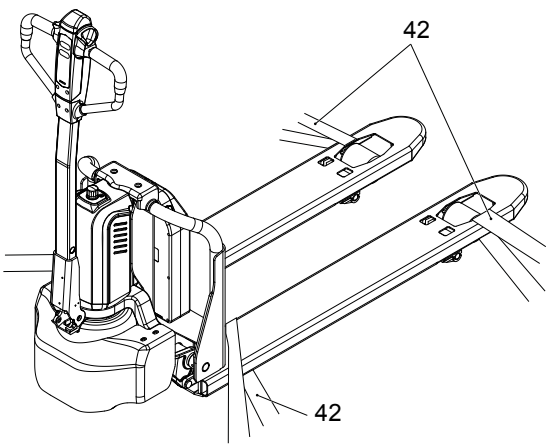


PTE 1.5 Li-Ion

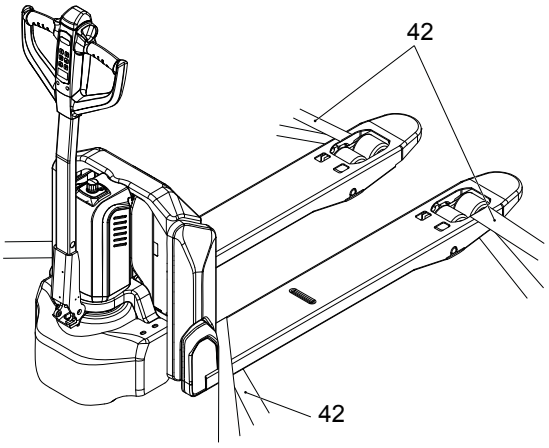


***Securing the truck for transport***

*Requirements*

– The truck is loaded.
– The truck is parked securely, see page 77.

*Tools and Material Required*

– Lashing straps

*Procedure*

• Attach the lashing straps (42) to the industrial truck and the transport vehicle and tension sufficiently.

*The truck can now be transported.*

# 3 Using the Truck for the First Time

**⚠ WARNING!**

**The use of unsuitable energy sources can be hazardous**

Rectified AC current will damage the assemblies (controllers, sensors, motors etc.) of the electronic system.
Unsuitable cable connections (too long, insufficient wire cross-section) to the battery (tow cables) can overheat, setting the truck and battery on fire.

▶The truck must only be operated with battery current.

---

*Procedure*

- Check the truck for completeness, see page 17.
- Check the tiller, see page 36.
  - If the tiller is fitted: verify correct assembly of all electrical and mechanical components.
  - If the tiller was supplied separately: Fit the tiller.
- Insert the battery, see page 64.
- Check the battery charge status, see page 59.
- Visual inspections and operations to be performed before starting daily operation, see page 74.

*The truck can now be started,* see page 74.

### Wheel flattening

If the truck has been parked for a long period, the wheel surfaces may tend to flatten. This flattening has a negative effect on the safety and stability of the truck. Once the truck has covered a certain distance, the flattening will disappear.

# 4 Changing the Access Code

**PTE 1.5 Li-Ion**

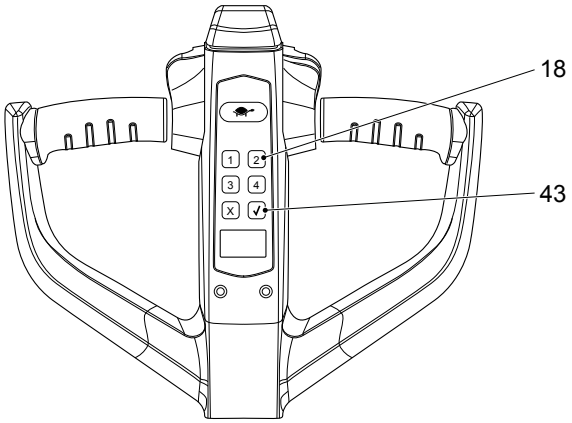


➔ The truck can only be started with the correct access code.

The truck is delivered with the access code 1234, which can be used for immediate start. A new access code can be generated using the administrator password 3232. The code is entered via the keypad (18).

***Changing the access code***

*Requirements*

– The truck is parked securely, see page 77.

*Procedure*

- Enter access code 3232 and press the RETURN key (43).
- Enter the previous access code and press the RETURN key.
- Enter the new access code and press the RETURN key.

*The access code has been changed.*

***Resetting the access code***

*Requirements*

– The truck is parked securely, see page 77.

*Procedure*

- Enter access code 123 and press the RETURN key.
- Enter access code 123 once more and press the RETURN key.

*The access code has been reset to 1234.*

# 5 Mounting the tiller

➔ If the tiller is supplied separately, the tiller must be installed by authorised and trained personnel prior to commissioning.

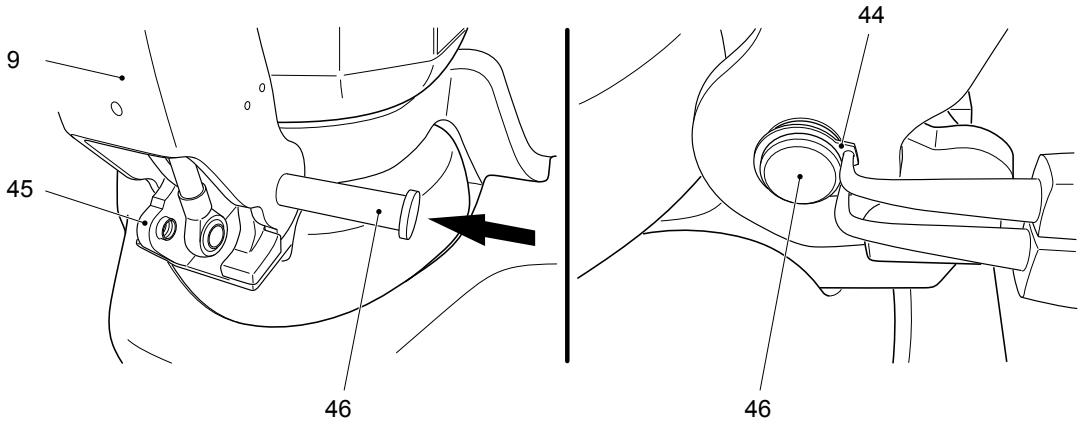


***Fitting the tiller***

*Requirements*

– The truck is parked securely, see page 77.

*Tools and Material Required*

– Circlip pliers
– Tyre lever
– Screwdriver, PH2
– The following materials are supplied with the truck:
– King pin (46)
– Retaining ring (44)

*Procedure*

- Position the tiller (9) vertically to the tiller mount (45) and fit the king pin (46).
- Secure the tiller in this vertical position until the gas strut has been fitted.
- Fit the retaining ring (44).

*The tiller has been fitted and is ready for the gas strut assembly.*

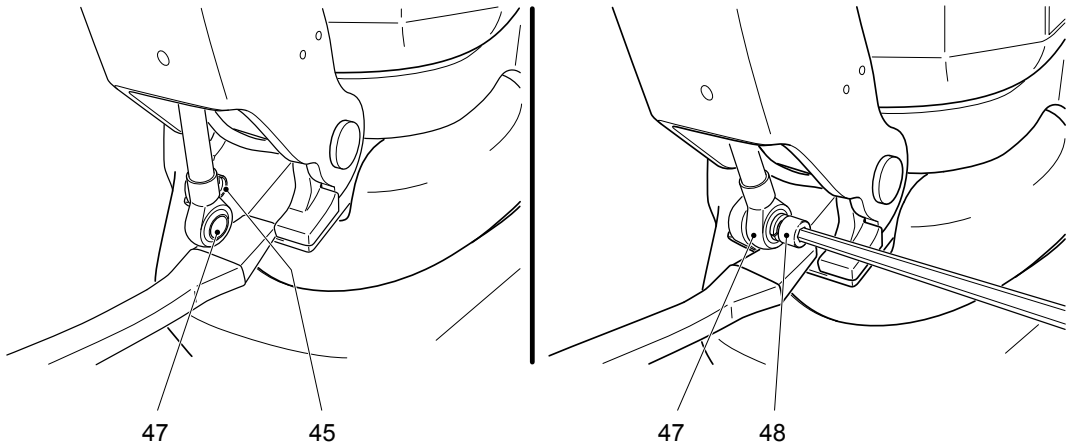


***Fitting the gas strut***

*Requirements*

– Tiller has been fitted.

*Tools and Material Required*

– Allen key, key width 6 mm
– Tyre lever
– Screwdriver, PH2
– The following materials are supplied with the truck:
– Screw and washer for gas strut (48)

*Procedure*

- Use the tyre lever and the screwdriver to position the strut (47) such that the hole on the strut (47) is aligned with the threaded hole on the tiller mount (45).

➔ Risk of trapping: The gas strut is placed under tension during this process. Hold the gas strut in this position until final assembly.

- Fit the gas strut with the screw and washer such that the front face of the screw thread is flush with the outside of the tiller mount.
- Press the tiller down and check for freedom of movement.
- Test the function of the gas strut.

➔ When the tiller is released, the gas strut must return the tiller to its vertical position.

*The gas strut has been fitted. The electrical connection of the tiller can be established.*

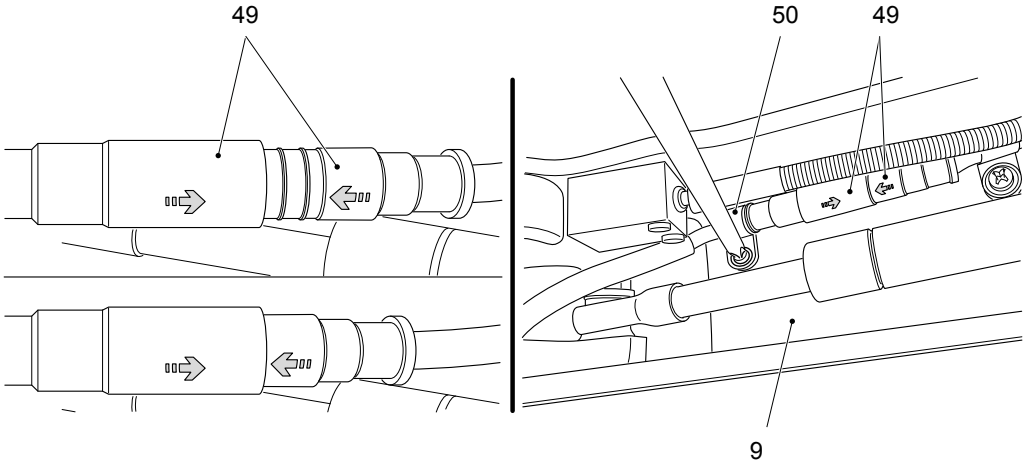


***Establishing the electrical connection of the tiller***

*Requirements*

– The tiller and gas strut have been fitted.

*Tools and Material Required*

– Screwdriver, PH2
– The following materials are supplied with the truck:
– Plastic clamp (50) with screw and washer

*Procedure*

- Press the tiller (9) down and hold it in this position.
- Before assembly, align the plug connections (49) such that the arrows on both parts are in line.
- Establish the connection (49).
- Align and install the plastic clamp (50) as shown.

*The electrical connection has been established. The tiller assembly process is completed.*

# D Battery - Servicing, Recharging, Replacement

## 1 Description of the lithium-ion battery

The lithium-ion battery is a battery with rechargeable high-performance energy cells.

The battery is designed for industrial trucks and can withstand heavy vibrations and knocks.

The battery features special connections for charging and discharging in order to prevent the use of incorrect batteries and chargers.

The battery has an intelligent battery management system, which includes safety functions such as voltage, temperature detection, undervoltage, overvoltage, overtemperature, overcurrent and short-circuit.

The internal resistance of the battery is very low, which minimises heat generation and maximises the power available to the truck.

**Temperatur range for using the battery**

Optimum battery useful life is achieved at the battery temperatures of +5°C to +40°C.

Low temperatures reduce the available battery capacity, high temperatures reduce the batteries useful life.

50°C is the maximum temperature for batteries, at which point the truck can be operated.

Temperature differences on both sides of the battery must not exceed 5°C.

**Battery chargers**

Only approved battery chargers must be used to charge the lithium-ion battery, see page 26.

# 2 Battery Decals

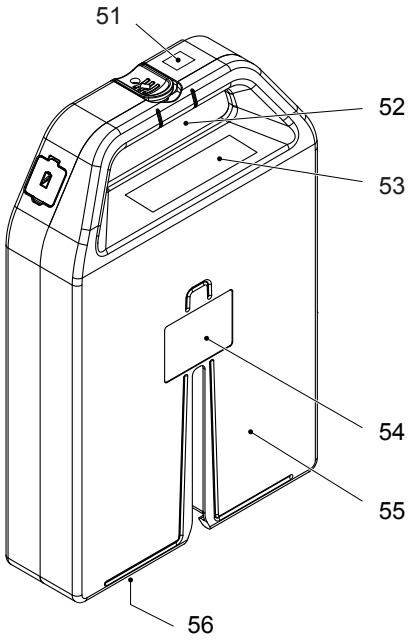


| Item | Description | Item | Description |
|---|---|---|---|
| 51 | Sign: "Capacity and nominal voltage" | 54 | Safety information |
| 52 | Data plate | 55 | Battery |
| 53 | Warning notice: "Avoid collision" | 56 | Serial number |

## 2.1 Battery data plate

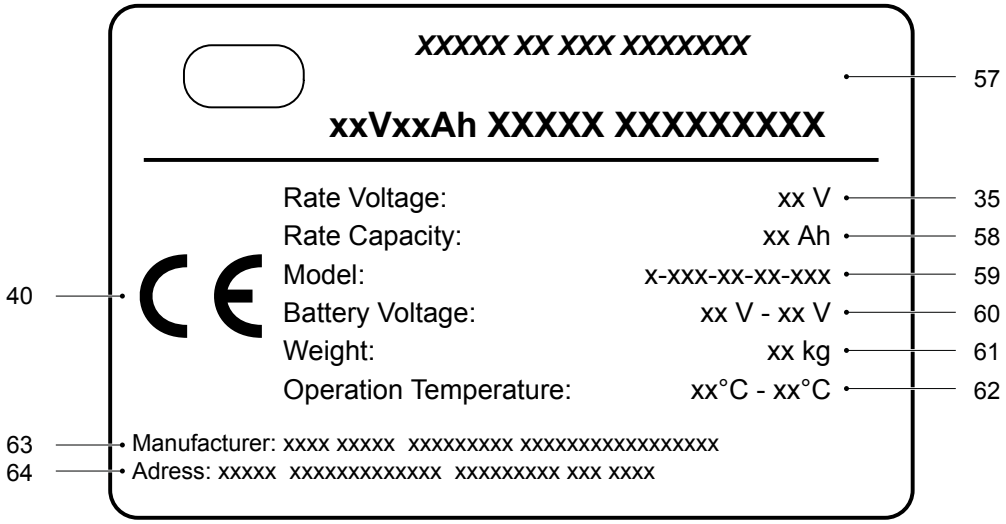


| Item | Description | Item | Description |
|---|---|---|---|
| 35 | Rated voltage | 60 | Voltage range |
| 40 | CE mark | 61 | Battery weight |
| 57 | Manufacturer logo and type designation | 62 | Operating temperature range |
| 58 | Battery capacity | 63 | Battery manufacturer |
| 59 | Model designation | 64 | Manufacturer address |

## 2.2 Battery serial number

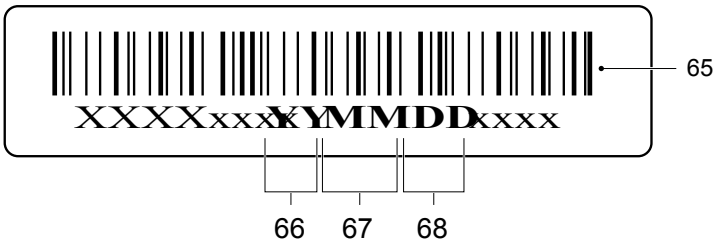


| Item | Description | Item | Description |
|---|---|---|---|
| 65 | Barcode | 67 | Month of manufacture |
| 66 | Year of manufacture | 68 | Day of manufacture |

# 3 Safety Instructions, Warning Indications and other Notes

## 3.1 Safety regulations for handling lithium-ion batteries

Do not carry out any repairs on the lithium-ion battery.

Replace defective lithium-ion battery by customer service.

**⚠ WARNING!**

**Risk of electric shock and burning**

Damaged and unsuitable cables can cause electric shocks and can overheat, resulting in fires.

- ▶ Always use mains cables with a maximum length of 30 m.
  Local regulations must be observed.
- ▶ Unwind the cable reel fully when using it.
- ▶ Always use original manufacturer’s mains cables.
- ▶ Insulation safety, acid and caustic ratings must comply with the manufacturer's mains lead.
- ▶ The charging connector must be dry and clean when used.

**⚠ WARNING!**

**Unsuitable batteries that have not been approved by the manufacturer for the truck can be hazardous**

The design, weight and dimensions of the battery have a considerable effect on the operational safety of the truck, in particular its stability and capacity. The use of unsuitable batteries that have not been approved for the truck by the manufacturer, can lead to a deterioration of the braking characteristics of the truck during energy recovery, causing considerable damage to the electric controller and resulting in serious danger to the health and safety of individuals.

- ▶ Only manufacturer-approved batteries may be used on the truck.
- ▶ Battery equipment may only be replaced with the agreement of the manufacturer.
- ▶ When replacing/installing the battery make sure the battery is securely located in the battery compartment of the truck.
- ▶ Do not use batteries that have not been approved by the manufacturer.

**⚠ WARNING!**

**Any damage and other defects to the charger can result in accidents.**

If any safety-related modifications, damage or other defects are discovered on the charger or during operation, the charger must be taken out of service until it has been repaired.

- ▶ Report any defects immediately to your supervisor.
- ▶ Tag out and decommission a faulty charger.
- ▶ Only return the charger to service when you have identified and rectified the fault.

**NOTICE**

**Risk of material damage due to improper charging**

Improper use of external charger can cause material damage

- ▶ It is necessary to apply the lithium-ion charger of our company.
- ▶ The operation voltage of the charger is 24 V; the maximum charging voltage is 29,4 V, the charging current is 5,0 / 8,0 A.
- ▶ The charger must only be used for batteries supplied by the manufacturer or other approved batteries provided it has been adapted by the manufacturer's service department.
- ▶ Reverse charge of the battery is prohibited.
- ▶ If the battery is heated obviously during charging, stop charging immediately. Charge again after it has been cooled down.
- ▶ Hold the puller when pulling the connectors. It is not allowed to pull the wires directly.

**NOTICE**

**Intermediate charging of the lithium-ion battery**

Intermediate charging of the lithium-ion battery is possible, i.e. a battery that is not fully discharged can be charged or partially charged at any time.

- ▶ The lithium-ion battery should be fully charged before use.
- ▶ To ensure reliable operation of the lithium-ion battery, it must be fully charged at least every 12 weeks with frequent intermediate charging.
- ▶ Turn off the battery charger before disconnecting the lithium-ion battery from the charger.

## 3.2 Potential hazards

No hazards are anticipated if the equipment is used correctly.

The following hazards can arise in the event of improper use:

- Physical damage:
  This can occur if a battery falls or is deformed through pressure (e.g. truck forks penetrate the battery housing).
  Mechanical damage includes cracks, breakage, splinters or holes in the battery housing. This type of damage may be caused by a short circuit inside the battery, which may result in harmful materials leaking, fire or battery explosion.
- Short circuits:
  These may be caused by connecting the two battery terminals (e.g. battery immersed in water)
- Temperature effects:
  High temperatures caused for example by sunlight or being store in warm locations (e.g. near ovens) can result in harmful materials leaking, fire or battery explosion.

In order to avoid fire, explosion and leakage of harmful materials, a safe place for storing batteries until the manufacturer's customer service department arrives on site must satisfy the following criteria:

- Do not store in places often frequented by personnel.
- Do not store in places where valuable objects (e.g. cars) are stored.
- A PM12i burning metal fire extinguisher or a Co2 fire extinguisher must be available to put out any fires.
- There should not be any fire or smoke detectors in the vicinity in order to ensure that an automatic fire detection system is only activated in the event of actual danger (e.g. naked flames).
- Small amounts of discharge from a single battery are not critical to the environment. Above-average natural ventilation is required in this case.
- No ventilation intake pipes should be in the vicinity, as discharged content could spread within a building.

Examples of where to store a non-functional battery:

- Roofed outdoor position.
- Ventilated container.
- Covered box with pressure and smoke discharge option.

### 3.2.1 Symbols - Safety and Warnings

| | |
|---|---|
| | Used lithium-ion batteries must be treated as hazardous waste.<br>Lithium-ion batteries marked with the recycling symbol and the sign showing a crossed-out waste bin must not be disposed of with ordinary household waste.<br>Buy-back terms and type of recycling are to be agreed with the manufacturer in example to accordance with the Battery Directive 2006/66/EG, for example. |
| | Avoid fire and short circuits due to overheating.<br>Do not ignite or position an open flame, glowing embers, or sparks near the lithium-ion battery.<br>Keep lithium-ion batteries away from strong heat sources. |
| | Hot surfaces.<br>Battery cells can generate very high short-circuit currents, causing them to become hot. |
| | Dangerous electrical voltage!<br>Battery cells can generate very high short-circuit currents, causing them to become hot.<br>Caution!<br>The metal parts of the battery cells are constantly under voltage, so do not place any foreign objects or tools on the lithium-ion battery.<br>Observe the accident prevention regulations and DIN EN 50272-3. |
| | Wear personal protective equipment (e.g. safety goggles and safety gloves) when handling damaged battery cells and lithium-ion batteries. Use only insulated tools.<br>If the contents leak out, do not inhale the fumes.<br>Always wash your hands after completing the work.<br>Do not mechanically machine the lithium-ion battery, strike, crush, compress, notch, dent or modify it in any way.<br>Do not open, damage, penetrate, bend, heat the lithium-ion battery or allow it to become hot, do not throw it into a fire, short circuit it or immerse it in water. Do not store it or operate it in pressurised containers. |
| | Follow the operating instructions and keep them in a visible position in the charging area.<br>If any faults are found on the lithium-ion battery, contact the manufacturer's customer service department immediately.<br>Do not carry out any actions on your own.<br>Do not open the lithium-ion battery. |
| | Protect the lithium-ion battery from solar radiation or other forms of heat radiation.<br>Do not expose the lithium-ion battery to heat sources. |

### 3.2.2 Marking of packages with lithium-ion batteries

The lithium-ion battery is a hazardous material. The applicable ADR regulations must be observed during transport.

➔ ADR = Accord européen relatif au transport international des marchandises Dangereuses par Route

69

70

**UN 3171**

| Item | Description |
|---|---|
| 69 | Danger label class 9A for lithium-ion batteries |
| 70 | Marking of packages with lithium-ion batteries in accordance with the dangerous goods regulations GGVS/ADR appendix 9 for the transport of hazardous goods |

### 3.2.3 Explosion and fire hazard

**⚠ WARNING!**

Physical damage, thermal effects or incorrect storage in the event of a defect can result in explosions or fire.
The battery materials can be flammable.

#### 3.2.3.1 Particular hazard from combustion products

The lithium ion battery may be damaged by a fire in the vicinity of the lithium ion battery. When fighting a lithium-ion battery fire, the following dangers and information must be taken into consideration.

**⚠ WARNING!**

**Contact with combustion products can be hazardous**

Fires produce combustion products.
Combustion is a chemical process by which a flammable material combines with oxygen under heat and light (fire).
The resulting combustion products can occur in the form of smoke, through leaking fluids, escaping gases, debris as well decomposition products of certain chemicals.
These combustion products are substances that enter the body through the respiratory tract and / or the skin, where they can produce and adverse effects such as choking.

▶ Avoid contact with combustion products.

▶ Use protective equipment.

---

- Hydrogen fluoride (HF) Hydrofluoric acid = extremely corrosive
- Risk of toxic substances produced by pyrolysis
- Risk of highly flammable gas mixtures.
- Other combustion products: Carbon monoxide & -dioxide, manganese, nickel and cobalt oxides.

#### 3.2.3.2 Special fire fighting protective equipment

- Use self-contained breathing apparatus.
- Wear protective overalls.

#### 3.2.3.3 Additional fire fighting instructions

To prevent secondary fires from occurring, the lithium-ion battery must be cooled from the outside. Fluids or solids must never be directed into the lithium-ion battery.

Suitable extinguishing agents
- Carbon dioxide extinguisher ($CO_2$)
- Water (not on mechanically opened or damaged batteries!)

Unsuitable extinguishing agents
- Foam
- Grease fire extinguishing agents
- Powder extinguishers
- Metal fire extinguishers (PM 12i extinguishers)
- Metal fire powder PL-9/78 (DIN EN 3SP-44/95)
- Dry sand

#### 3.2.3.4 Instructions for cooling an overheated, non physically damaged battery

This type of damage may be caused by a short circuit inside the battery, which may result in harmful materials leaking, fire or battery explosion.
Endangered unopened batteries can be cooled using a water jet.

### 3.2.4 Material discharge

**⚠ WARNING!**

**Battery electrolyte fluid can be hazardous**

Electrolyte fluid can be discharged if the battery is physically damaged. Electrolyte fluid is harmful and must not come into contact with the skin or eyes.

▶ If it does, rinse the affected parts with plenty of water and seek medical assistance immediately.

▶ In the event of skin irritation or if any substances are breathed in, seek medical assistance immediately.

▶ In the event of inhalation bring the affected person into the fresh air and keep them still.

#### 3.2.4.1 Precautionary measures for personnel

- Keep personnel away and facing the wind.
- Block off the affected area.
- Ensure there is adequate ventilation.
- Wear personal protective equipment.
- If vapours / dust / aerosols are present, use self-contained breathing apparatus.

#### 3.2.4.2 Precautionary measures for the environment

Do not allow spilled fluids to enter the water system, drainage system or the underground
water.

#### 3.2.4.3 Cleaning measures

The leaked fluid must be removed professionally by the operating company on the basis of a risk assessment and disposed of in the correct manner. The fire brigade, the Agency for Technical Relief or similar institutions must be used. Absorb residues with liquid-absorbent material (such as vermiculite, sand, universal binders and pebble grain).

### 3.2.5 Touch voltage hazard

**⚠ WARNING!**

Hazardous contact voltages only arise in the event of a technical or physical defect. The batteries are normally charged. There is still some residual voltage in a discharged battery. This must be considered as a hazardous contact voltage.

With this kind of defect the battery must not be touched and must not come into contact with metal objects see page 44.

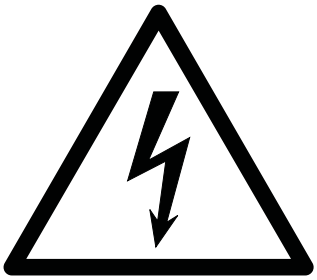

## 3.3 Battery lifetime and maintenance

The lithium-ion battery is wear-free. The components are maintenance-free, as a result there are no maintenance intervals planned for this battery.

## 3.4 Charging the battery

**⚠ DANGER!**

**Explosion risk when charging unsuitable battery types**

Charging a battery that is not suitable for this charger can result in damage to the charger and battery. The battery could expand or burst.

▶ The lithium-ion battery must only be charged with the battery charger provided for this battery.

**⚠ WARNING!**

**Warning: hazardous electrical voltage!**

The charger is an electric component conducting voltages and currents that are hazardous to people.

▶ The charger must only be operated by trained technicians.

▶ Disconnect the mains supply and the battery connector before carrying out any work on the charger.

▶ The charger should only be opened and serviced by trained electricians.

**⚠ WARNING!**

The use of a different charger can result in overheating, fire or a battery explosion.

***NOTICE***

**Full discharge can damage the battery**

Self-discharge can cause the battery to fully discharge. Full discharge shortens the service life of the battery.

▶ Before a long period of inactivity, the battery must be fully charged.

▶ Charge the battery at least every 12 weeks, see page 52.

➔ If the battery is fully discharged or if the battery temperature is below the permissible level, the battery will not charge. Fully discharged batteries cannot be charged by the user (faulty). Contact the manufacturer's customer service department.

➔ Due to the risk of condensate formation, batteries that have been stored at temperatures below 0°C must only be charged after spending at least 4 hours in a warm environment.

## 3.5 Storage / safe handling / faults

### 3.5.1 Storing the battery

***NOTICE***

**Discharge can damage the battery**

If the battery is not used for a long period of time, it can become damaged through discharge.

▶ Before a long period of inactivity, the battery must be fully charged.

▶ To ensure a long battery life, we recommend checking and charging the battery every 4 weeks when it is not being used.

### 3.5.2 Instructions for safe handling

***NOTICE***

In new condition, the lithium-ion battery is transported and stored with a charge level of <100 %.

- Do not physically machine or modify the battery.
- Do not open, damage, penetrate or bend the battery.
- Do not throw the battery into a fire.
- Protect the battery from high temperatures and overheating.
- Protect the battery from solar irradiation.
- Keep the battery away from radiant sources and strong heat sources.
- The specified charging, operating and storage temperature ranges must be observed.

Failure to comply with these safety instructions can result in fire and explosion or the leakage of harmful materials.

### 3.5.3 Faults

If any damage is found to the battery or battery charger contact the manufacturer's customer service department immediately. The operating company must not carry out any remedial work on its own.

Independent attempts to tamper with or repair the battery may invalidate the warranty. A service agreement with the manufacturer will help identify faults.

**⚠ WARNING!**

Do not open the battery.

## 3.6 Disposal and transport of a lithium-ion battery

### 3.6.1 Instructions for disposal

**NOTICE**

Lithium-ion batteries must be disposed of in accordance with the relevant national environmental protection regulations.

▶ For lithium-ion battery disposal, contact the manufacturer's customer service department.

---

Used cells and lithium-ion batteries are recyclable economic goods. In accordance with the marking showing a crossed-out waste bin, these lithium-ion batteries may not be disposed of as domestic waste.

Return or recycling of batteries must be ensured in accordance with the Battery Directive 2006/66/EG, for example.

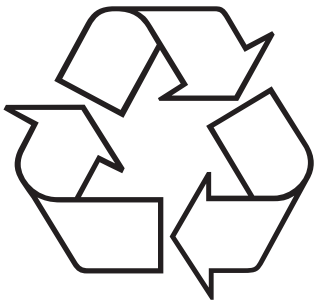

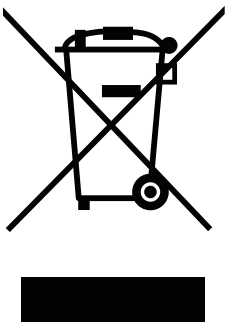

Used lithium-ion batteries must be treated as hazardous waste.

Lithium-ion batteries marked with the recycling symbol and the sign showing a crossed-out waste bin must not be disposed of with ordinary household waste.

Buy-back terms and type of recycling are to be agreed with the manufacturer.

### 3.6.2 Shipping information

The lithium-ion battery is a hazardous material. The applicable ADR regulations must be observed during transport.

➔ ADR = Accord européen relatif au transport international des marchandises Dangereuses par Route

#### 3.6.2.1 Shipping functional batteries

Functioning batteries can be shipped in accordance with the following regulations:

| | |
|---|---|
| Classification according to ADR (road transport) | UN 3171 lithium-ion battery class 9 |
| - Classification code | M4 lithium battery |
| - Danger label | UN 3171 |
| - ADR limited quantity | LQ:0 |

| | |
|---|---|
| IMDG classification (sea transport) | UN 3171 lithium-ion battery class 9 |
| - EMS | F-A, S-I |
| - Danger label | UN 3171 |
| - IMDG limited quantity | LQ: - |

| | |
|---|---|
| IATA classification (air transport) | UN 3171 lithium-ion battery class 9 |
| - Danger label | UN 3171 |

| | |
|---|---|
| Exposure scenario | Not specified. |
| Substance safety rating | Not specified. |
| Marking | Product does not require marking under EC Directive / HazMatR. |

***NOTICE***

In new condition, the lithium-ion battery is transported with a charge level of <100 %.

#### 3.6.2.2 Shipping faulty batteries

To transport these faulty lithium-ion batteries, contact the manufacturer's customer service department. Faulty lithium-ion batteries must not be transported independently.

## 3.7 Hazard and Safety Instruction Phrases

Hazard and safety instruction phrases are codified hazard and safety instruction phrases for hazardous materials used as part of the globally harmonised system for the grading and identification of chemicals.
The following H phrases describe the hazards arising from the battery cells and their contents.
The P phrases describe the safety measures to be applied.

### 3.7.1 Hazard Instruction Phrases (H phrases)

#### 3.7.1.1 Physical hazards (H200 range)

| | |
|---|---|
| H242 | Heating can result in fire. |

### 3.7.2 Safety Instruction Phrases (P phrases)

#### 3.7.2.1 General (P100 range)

| | |
|---|---|
| P102 | Keep out of reach of children. |

#### 3.7.2.2 Prevention (P200 range)

| | |
|---|---|
| P201 | Obtain special instructions before use. |
| P202 | Read and understand all safety instructions before use. |
| P233 | Keep containers sealed. |
| P235 + P410 | Keep cool. Protect against direct sunlight. |
| P251 | Do not penetrate or burn, even after use. |
| P261 | Avoid inhalation of dust, smoke, gas, steam, vapours or aerosols. |

#### 3.7.2.3 Reaction (P300 range)

| | |
|---|---|
| P314 | Seek medical advice or assistance if feeling unwell. |
| P304 + P340 | In case of inhalation:<br>Bring the person into fresh air and ensure he or she can breath unhindered. |
| P313 + P332 | For skin irritation: Seek medical advice or assistance. |
| P313 + P337 | For persistent eye irritation: Seek medical advice or assistance. |
| P370 + P378 | In the event of fire:<br>Use $CO_2$ to extinguish. |
| P370 + P380 | In the event of fire:<br>Clear the area. |

#### 3.7.2.4 Storage (P400 range)

| | |
|---|---|
| P410 + P412 | Protect against direct sunlight and do not subject to temperatures in excess of 40 °C. |
| P411 + P235 | Keep cool and do not store in temperatures in excess of 50 °C. |

### 3.7.2.5 Disposal (P500 range)

| | |
|---|---|
| P502 | Obtain information on recycling or reuse from the manufacturer or supplier. |

# 4 Charging the battery

## 4.1 Correct Use and Application

The operating instructions are a major component of the charger.

The owner shall ensure that the operating instructions are kept permanently in the vicinity of the charger, and that operating personnel shall be aware of the guidelines mentioned in the instructions.

The owner shall add further instructions regarding national accident prevention and environmental protection regulations to the operating instructions, including information on supervisory and reporting obligations, taking into account particular company practices e.g. in terms of work organization, work processes and the personnel employed.

Apart from the operating instructions and the current accident prevention regulations in force in the country and place of use, generally recognised technical regulations for safe and proper use shall be observed.

**Charging the battery**

➔ The lithium-ion battery may only be charged with an approved charger within the permissible temperature range,see page 25.

The truck should not be stored without battery compensation charge for more than 12 weeks.

***NOTICE***

**Damage to the lithium-ion battery due to improper connection**

Unsuitable connector plugs of industrial trucks or battery chargers used with the lithium-ion battery can damage the battery connector.

▶Operate the lithium-ion battery only with appropriate trucks and battery chargers.

## 4.2 Charge Status Indicator

### PTE 1.1 Li-Ion

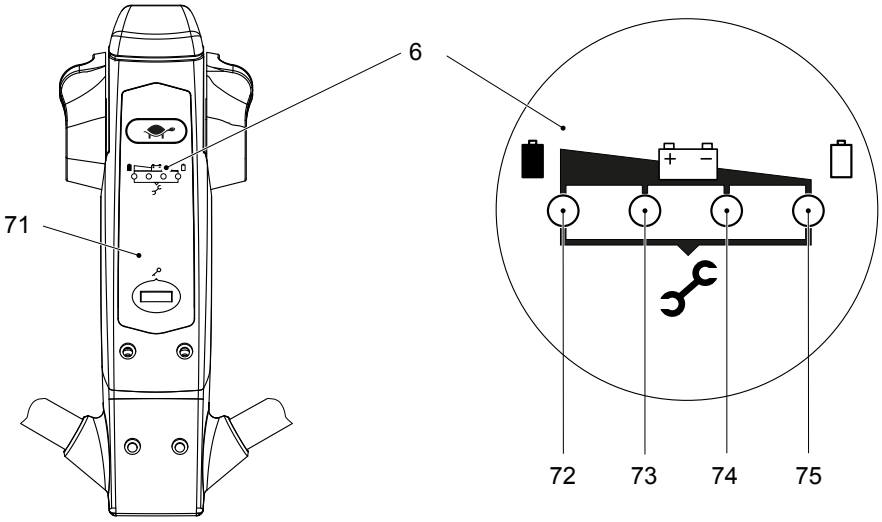


The charge status indicator (6) is located on the tiller head (71). The charge status is indicated by four LEDs of different colour, which mean the following:

| Item | LED | Charge status |
|---|---|---|
| 72 | Green LED lit | 75% to 100% |
| 73 | Blue LED lit | 50% to 75% |
| 74 | Yellow LED lit | 25% to 50% |
| 75 | Red LED lit | 0% to 25% |

Error messages (see page 90) are indicated by means of a flashing code.

In the event of an error, the four LEDs flash for 1s, then the green LED (72) flashes. Multiply the number of flashing signals by 10 and make a note. The red LED (75) then flashes. Add the number of flashing signals to the value multiplied by 10.

**Example:**

| LED | | | | Meaning |
|---|---|---|---|---|
| **Green** | **Blue** | **Yellow** | **Red** | |
| ☼ | ☼ | ☼ | ☼ | After one second, a flashing code for an error message is displayed. |
| ☼ | | | | Green LED flashes once.<br>1 * 10 = **10** |
| | | | ☼<br>☼<br>☼ | Red LED flashes three times: **3** |
| In this example, the error code is: 10 + 3 = **13** | | | | |

## PTE 1.5 Li-Ion

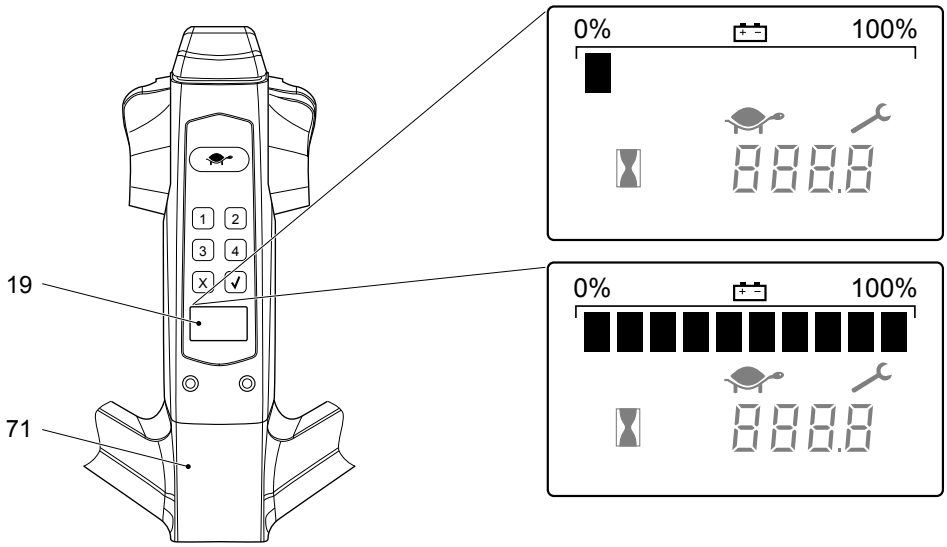


The charge status indicator of the battery is integrated in the display unit (19) on the tiller head (71).

The charge status is displayed in ten increments. Each is represented by a rectangle that corresponds to 10% of the battery charge.

The rectangles gradually disappear as the battery discharges. Special statuses appear in the display unit as error codes.

| Code | The error code appears if ... | Effect |
|---|---|---|
| 0 | The battery charge is too low. | Lift function is deactivated. |
| 91 | Operation of the truck continues without first charging the battery. | Travel speed is reduced. |

Additional error codes can be found in the "Troubleshooting" chapter, see page 90.

## 4.3 Charging the Battery with External Charger

**Maintenance personnel**

Batteries may only be charged, serviced or replaced by trained personnel. These operating instructions and the battery manufacturer's instructions must be observed when performing these operations.

Park the truck securely before carrying out any work on the batteries (see page 77).

**General information**

- The charge status of the battery is indicated by LEDs on the battery charger.
- The charging time depends on the battery charge status. The time it takes to charge an almost fully depleted battery depends both on the battery capacity and the charge current. The approximate duration can be calculated as follows:
  Charging time = capacity of battery / charge current of battery charger.
- The lithium-ion battery can also be used when not fully charged. In this case, the remaining operating time is reduced.
- Charging continues automatically after a mains failure. Charging can be interrupted by pulling out the mains connector and continued as a partial charge.

***NOTICE***

The battery temperature rises by approx. 13°C during charging. Battery charging should only start when the battery temperature is below 50°C. The battery temperature before charging should be at least 0°C as otherwise it will affect the charge.

**Meaning of the LEDs on the battery charger**

When the battery charger is connected to the battery and to the power supply, the LEDs on the charger indicate the following:

| LED lit | Meaning |
|---|---|
| Green | The battery is fully charged |
| Red | Battery is charging |

If the green LED does not light up or if the red LED lights up permanently or not at all, this indicates a fault, see page 90.

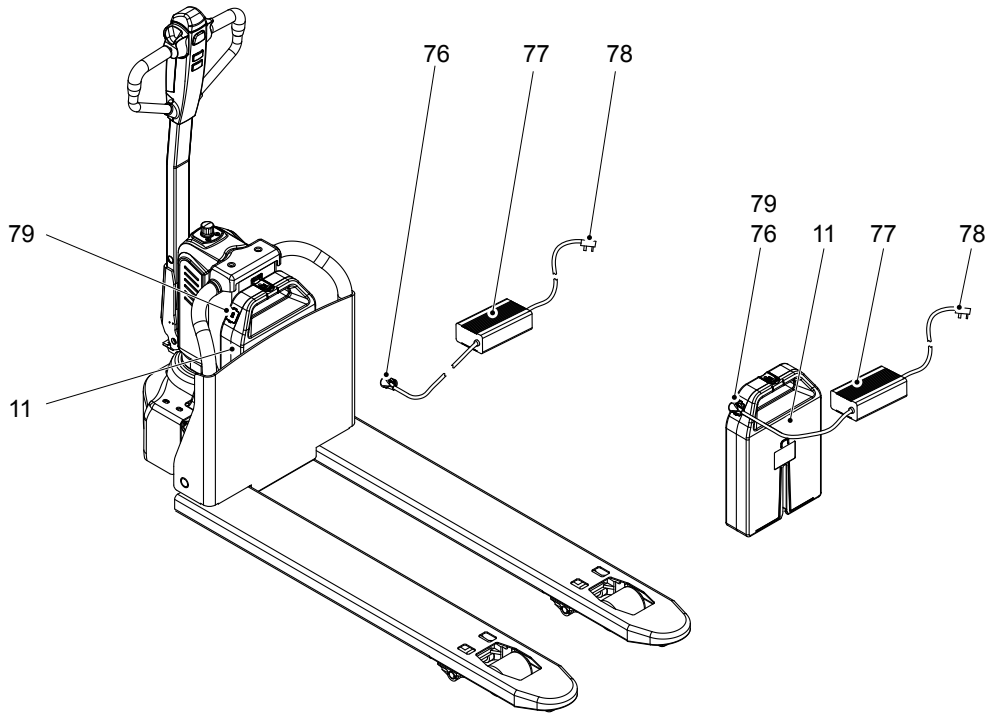


➔ The graphic shows the PTE 1.1 Li-Ion as an example.

***Charging the battery***

*Requirements*

– The truck is parked securely, see page 77.
– The battery charger is approved for the battery type, see page 26.

*Tools and Material Required*

– Battery charger

*Procedure*

- Expose the charging socket (79) of the battery and start by connecting it to the charge connector (76) of the battery charger (77).
- Then connect the mains plug (78) of the battery charger (77) to the power supply.

➔ The charging process is indicated by the illumination of the red LED.

- Check the charge status; also refer to the instructions on the battery charger (77).

➔ The charging process is completed when the green LED lights up.

- Once the battery (11) is charged, disconnect the battery charger (77) from the power supply before unplugging it from the battery.
- Close the charging socket (79)with the cap.

*Battery is charged.*

➔ Alternatively, the battery can also be charged outside the truck, see page 64. The process for charging the battery remains the same.

# 5 Battery removal and installation

## 5.1 Removing the battery

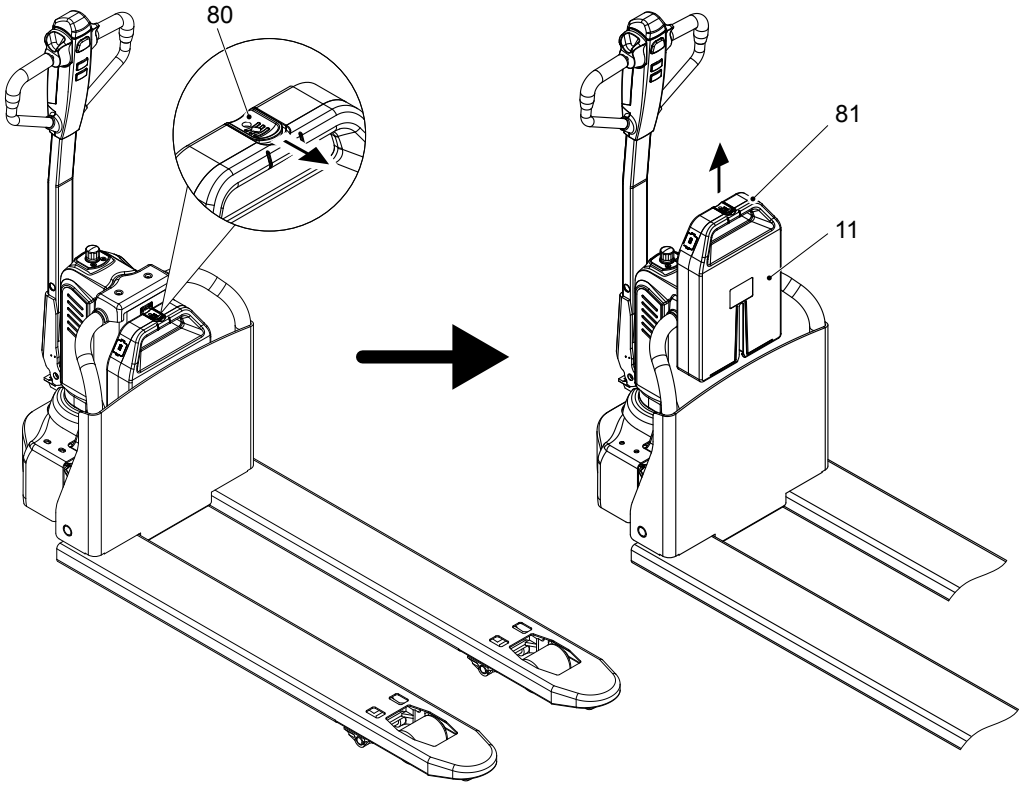


➔ The graphic shows the PTE 1.1 Li-Ion as an example.

***Removing the battery***

*Requirements*

– The truck is parked securely, see page 77.
– The emergency disconnect switch is actuated, see page 80.

*Procedure*

- Unlock the battery latch (80).
- Lift the battery (11) up by the battery handle (81).

*The battery has been removed.*

## 5.2 Battery installation

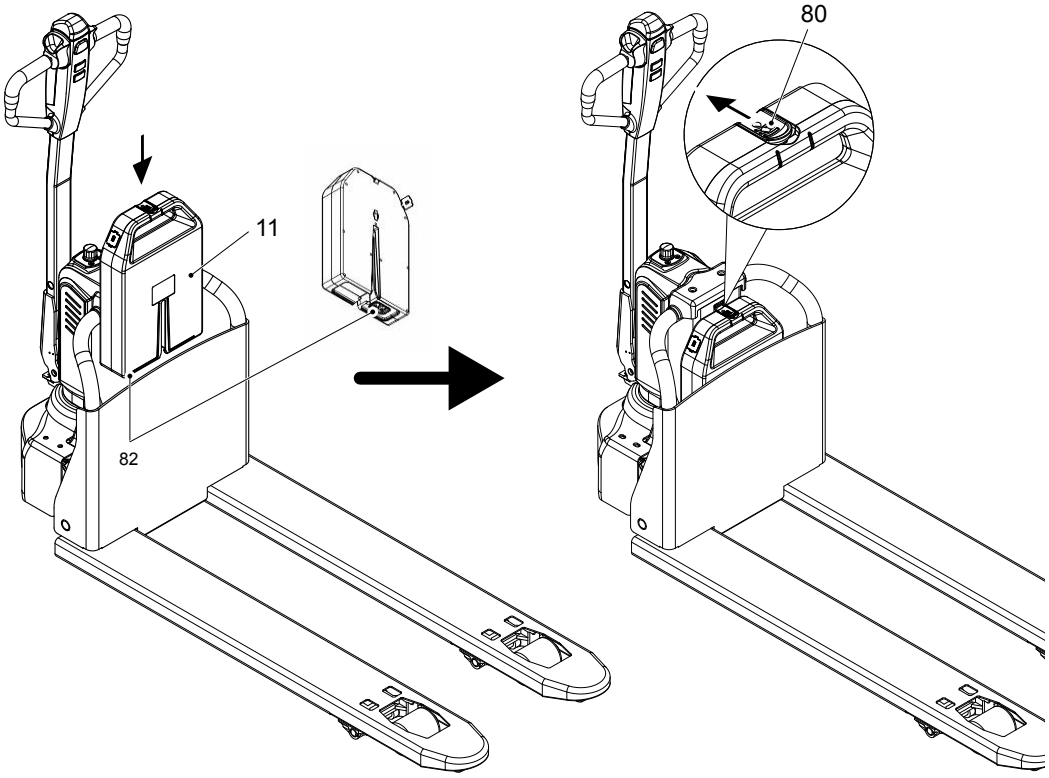


➔ The graphic shows the PTE 1.1 Li-Ion as an example.

***Installing the battery***

*Requirements*

– The truck is parked securely, see page 77.

*Procedure*

- Insert the battery (11) into the battery compartment.

➔ The plug connection (82) between the battery and truck must be fully connected.

- Lock the battery latch (80).
- Release the emergency disconnect switch, see page 80.

*The battery is now installed.*

# E Operation

## 1 Safety Regulations for the Operation of Forklift Trucks

**Driver authorisation**

The truck may only be used by suitably trained personnel, who have demonstrated to the proprietor or his representative that they can drive and handle loads and have been authorised to operate the truck by the proprietor or his representative.

**Operator's rights, responsibilities and rules of conduct**

The driver must be informed of his duties and responsibilities and be instructed in the operation of the truck and shall be familiar with the operating instructions. Safety shoes must be worn on pedestrian-operated trucks.

**Unauthorised use of truck**

The operator is responsible for the truck during the time it is in use. The operator must prevent unauthorised persons from driving or operating the truck. Do not carry passengers or lift other people.

**Damage and faults**

The supervisor must be informed immediately of any damage or faults to the truck or attachment. Trucks which are unsafe for operation (e.g. wheel or brake problems) must not be used until they have been rectified.

**Repairs**

The operator must not carry out any repairs or alterations to the truck without authorisation and the necessary training to do so. The operator must never disable or adjust safety mechanisms or switches.

### Hazardous area

**⚠ WARNING!**

**Risk of accidents/injury in the hazardous area of the truck**

A hazardous area is defined as the area in which people are at risk due to travel or lifting operations of the truck, its load handler or the load. This also includes the area within reach of falling loads or lowering/falling operating equipment.

- ▶ Instruct unauthorised persons to leave the hazardous area.
- ▶ In case of danger to third parties, give a warning signal in good time.
- ▶ If unauthorised persons are still within the hazardous area, stop the truck immediately.

---

### Safety devices, warning signs and warning instructions

Safety devices, warning signs (see page 28) and warning instructions in the present operating instructions must be strictly observed.

# 2 Displays and Controls

## 2.1 Controls

### PTE 1.1 Li-Ion

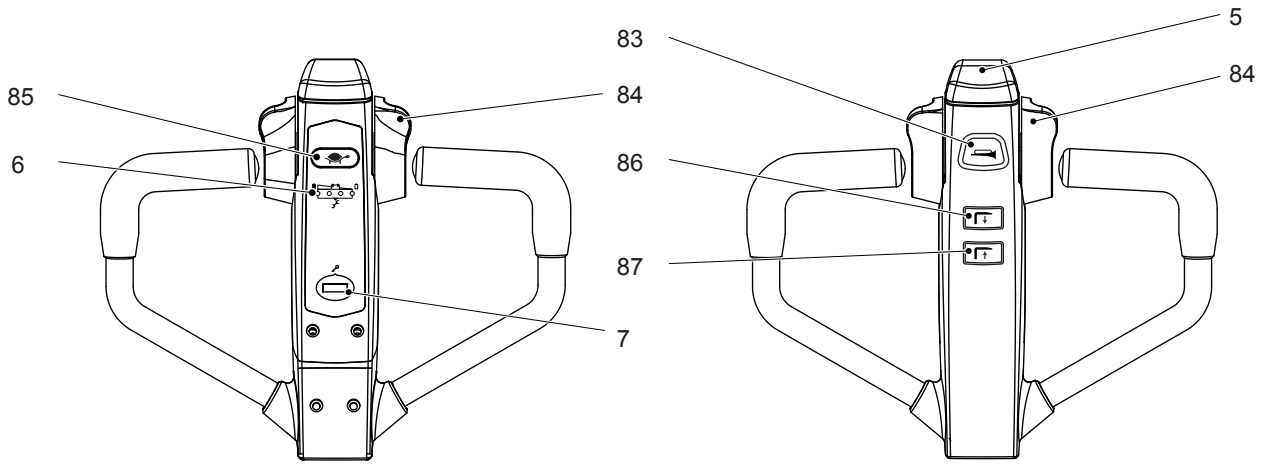


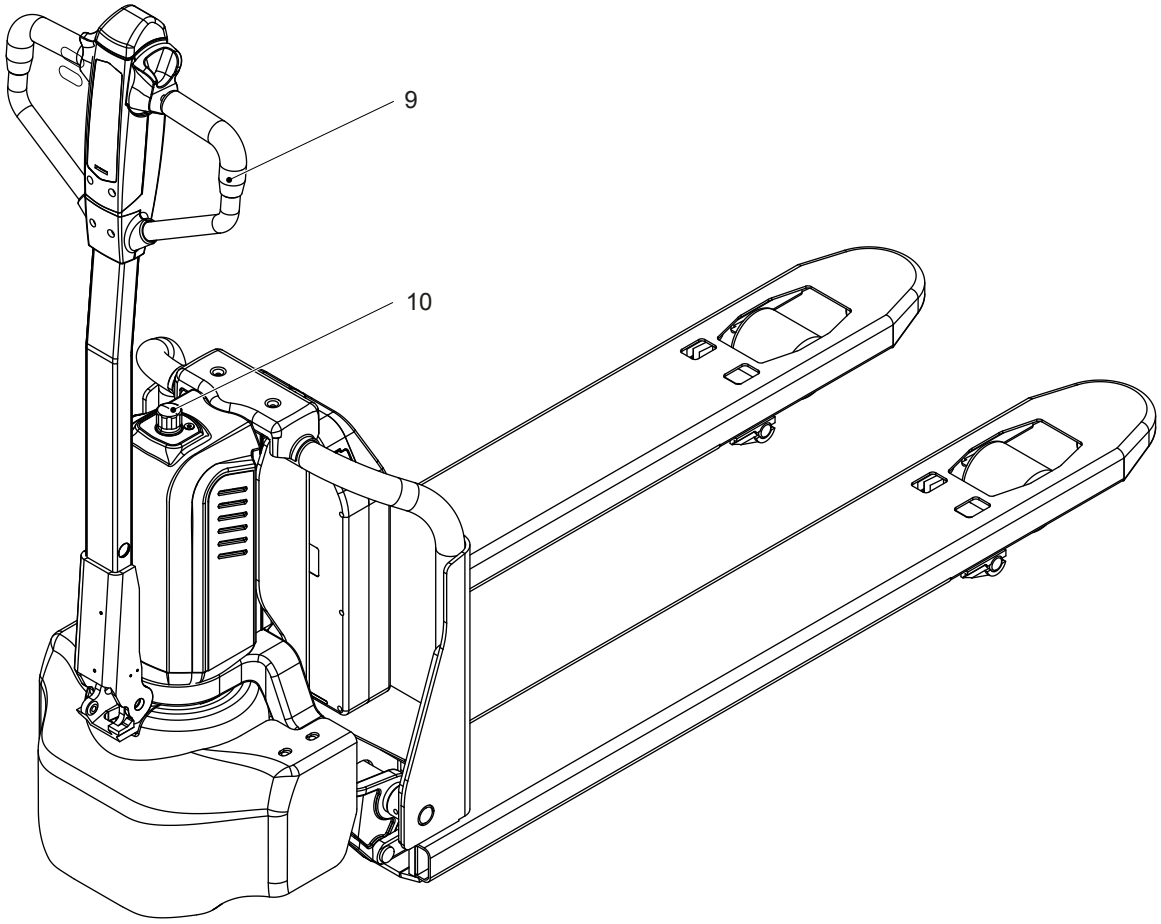

| Item | Description | Function |
|---|---|---|
| 5 | Collision safety switch | Safety feature<br>When the collision safety switch is activated, the truck travels a short distance away from the operator in load direction, thus protecting the operator. The truck is then braked, see page 19. |
| 6 | Charge status indicator | Shows the battery charge status, see page 60. |
| 7 | Magnetic lock | Starts the truck – see page 75. |
| 9 | Tiller | Steers the truck via corresponding movements, see page 85. |
| 10 | Emergency disconnect switch | Stops all electrical functions (travel, lifting, lowering) and activates the electromagnetic brake, see page 80. |
| 83 | Warning signal button | Activates an audible signal. |
| 84 | Travel switch | Controls the travel direction and the travel speed, see page 83. |
| 85 | Slow travel button | Toggles between slow travel and travel at normal speed. Switches to slow travel when the tiller is in vertical position, see page 84. |
| 86 | Lift button | Raises the load handler, see page 86. |
| 87 | Lower button | Lowers the load handler, see page 86. |

## PTE 1.5 Li-Ion

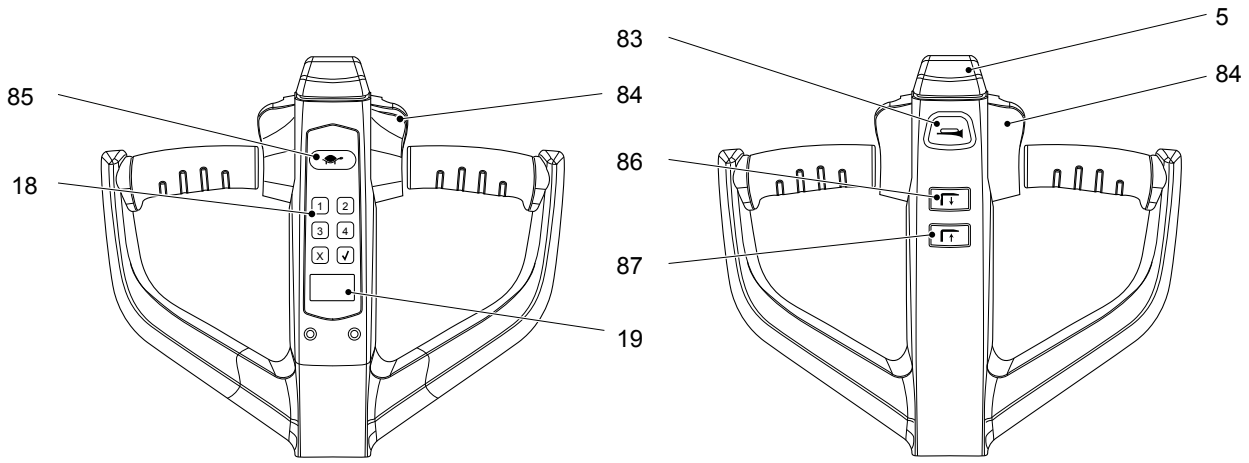


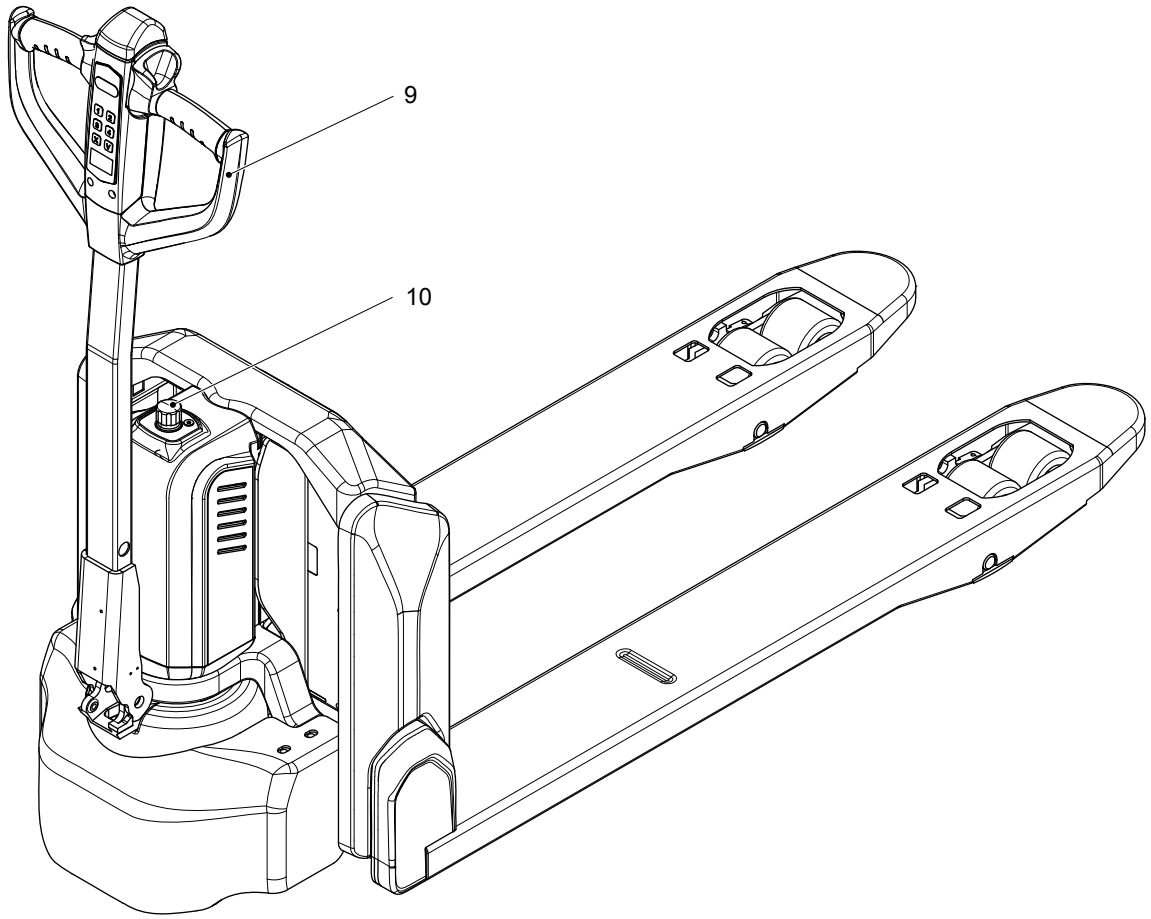

| Item | Description | Function |
|---|---|---|
| 5 | Collision safety switch | Safety feature<br>When the collision safety switch is activated, the truck travels a short distance away from the operator in load direction, thus protecting the operator. The truck is then braked, see page 19. |
| 9 | Tiller | Steers the truck via corresponding movements, see page 85. |
| 10 | Emergency disconnect switch | Stops all electrical functions (travel, lifting, lowering) and activates the electromagnetic brake, see page 80. |
| 18 | Keypad | Entry of access code for starting the truck, see page 35. |
| 19 | Display unit | Displays various truck data, see page 73. |
| 83 | Warning signal button | Activates an audible signal. |
| 84 | Travel switch | Controls the travel direction and the travel speed, see page 83. |
| 85 | Slow travel button | Toggles between slow travel and travel at normal speed. Switches to slow travel when the tiller is in vertical position, see page 84. |
| 86 | Lift button | Raises the load handler, see page 86. |
| 87 | Lower button | Lowers the load handler, see page 86. |

## 2.2 Display symbols

### PTE 1.5 Li-Ion

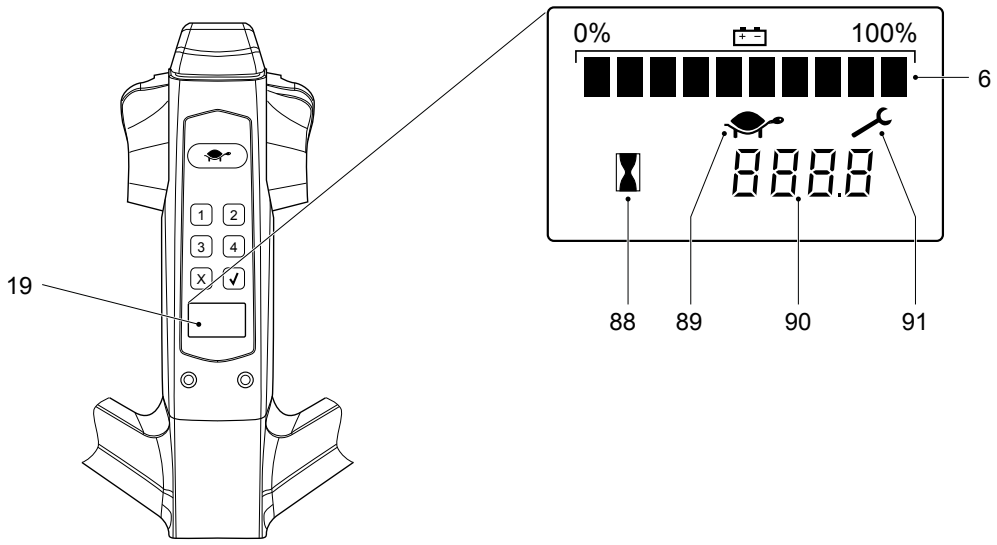


| Item | Description | Function |
|---|---|---|
| 6 | Charge status indicator | Shows the battery charge status, see page 60. |
| 19 | Display unit | Displays symbols for:<br>- Battery charge status<br>- Slow travel<br>- Hour meter<br>- Service and fault messages. |
| 88 | Hourglass | Flashes when the hour meter is active. |
| 89 | Tortoise | Only appears when slow travel mode is active. |
| 90 | Number field | Displays operating hours or fault codes, see page 92. |
| 91 | Service symbol | Only appears when scheduled maintenance is required or if faults exist.<br>Fault codes are displayed in the number field. |

# 3 Starting up the truck

## 3.1 Checks and operations to be performed before starting daily operation

**⚠ WARNING!**

**Any damage and other defects to the truck can result in accidents.**

If damage or other truck defects are discovered during the following checks, the truck must be taken out of service until it has been repaired.

▶ Report any defects immediately to your supervisor.

▶ Tag out the defective truck and take it out of service.

▶ Do not return the industrial truck to service until you have identified and rectified the fault.

***Inspection before daily operation***

*Requirements*

– The truck is parked securely, see page 77.

*Procedure*

- Check the entire truck from the outside for damage and leaks.
- Check the load handler for visible signs of damage such as cracks, bent or severely worn forks.
- Check the hydraulic system for leaks, see page 117.
- Check the battery attachment and cable connections for damage and make sure they are secure.
- Check the drive wheel and load wheels for damage and freedom of movement, see page 115.
- Check that the markings and labels are all present and legible, see page 28.
- Check that the controls automatically return to the neutral position after use, see page 83.
- Switch on the truck, see page 74.
- Check the battery charge status, see page 60.
- Test the warning signal, see page 69.
- Test the brakes, see page 81.
- Test the travel functions, see page 83.
- Test the lifting and lowering functions, see page 86.
- Test the emergency disconnect switch, see page 80.
- Test the collision safety switch, see page 19.

## 3.2 Preparing the truck for operation

### PTE 1.1 Li-Ion

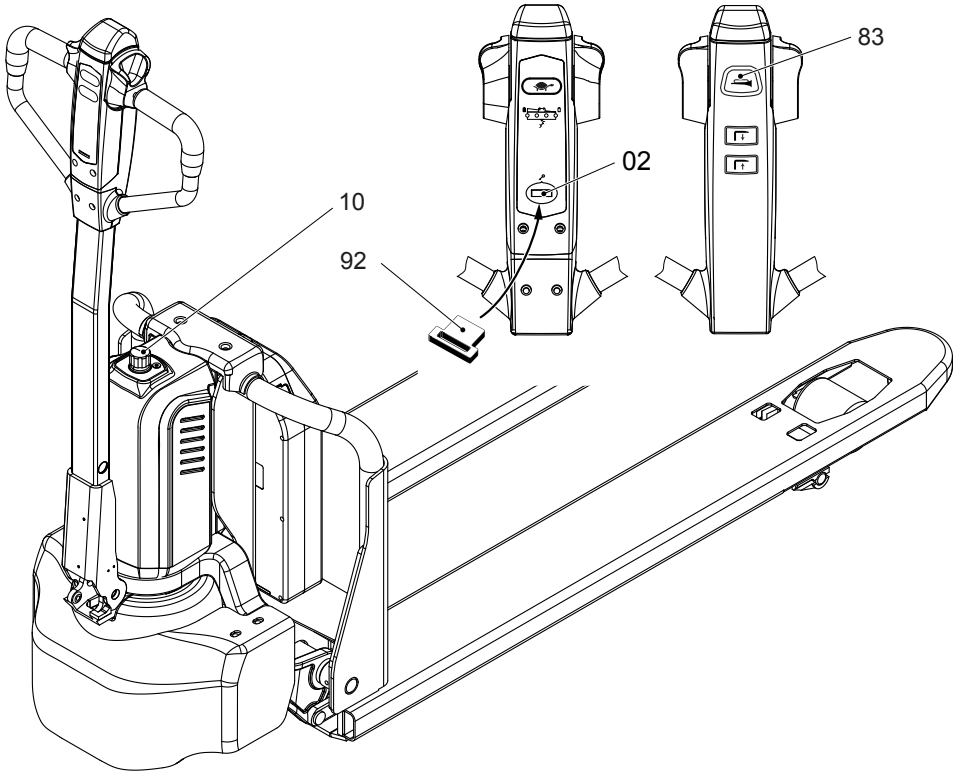


***Switching on the truck***

*Requirements*

– Checks and operations before starting daily work have been completed, see page 74.
– Load is correctly palletised and secured, see page 86.

*Procedure*

- Release the emergency disconnect switch (10), see page 80.
- Insert the magnetic key (92) into the magnetic lock (7).
- Press the warning signal button (83).

*The truck is ready for operation.*

**PTE 1.5 Li-Ion**

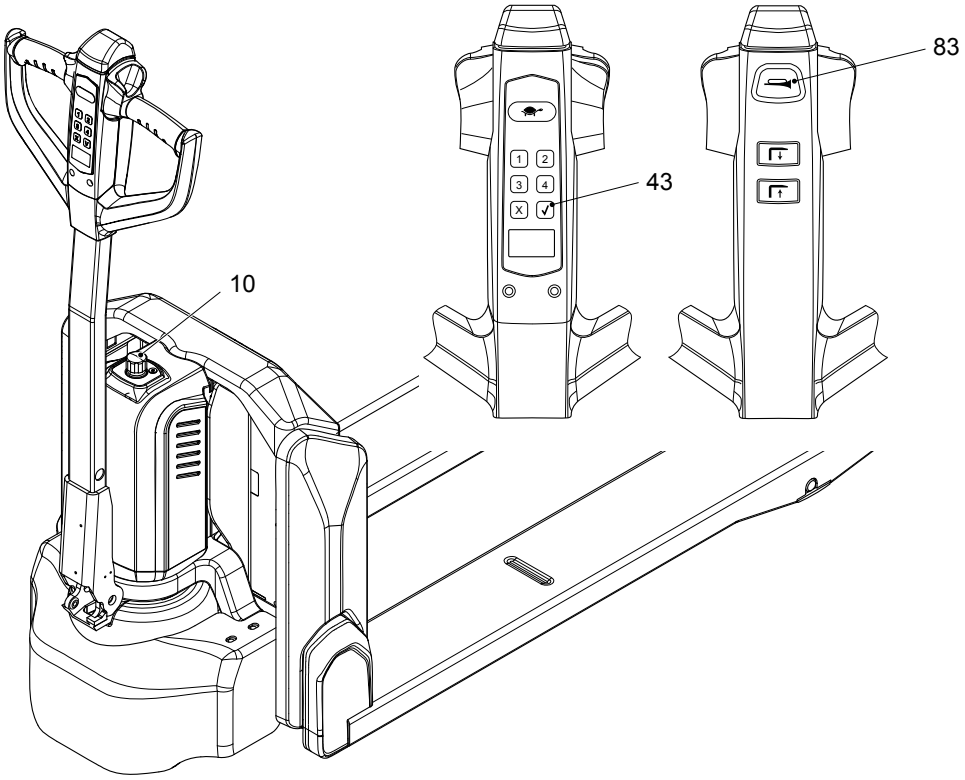


***Switching on the truck***

*Requirements*

– Checks and operations before starting daily work have been completed, see page 74.
– Load is correctly palletised and secured, see page 86.

*Procedure*

- Release the emergency disconnect switch (10), see page 80.
- Switch on the truck. To do this:
  - Enter the access code, see page 35.
  - Press the RETURN key (43).
- Press the warning signal button (83).

*The truck is ready for operation.*

## 3.3 Parking the truck securely

**⚠ WARNING!**

**An unsecured truck can cause accidents**

Parking the truck on an incline, without the brakes applied or with a raised load or load handler is dangerous and is strictly prohibited.

- ▶ Park the truck on a level surface. In special cases the truck may need to be secured with wedges.
- ▶ Fully lower the load handler.
- ▶ Select a place to park where no other people are at risk of injury from the lowered load handler.
- ▶ If the brakes are not working, place wedges underneath the wheels of the truck to prevent it from moving.

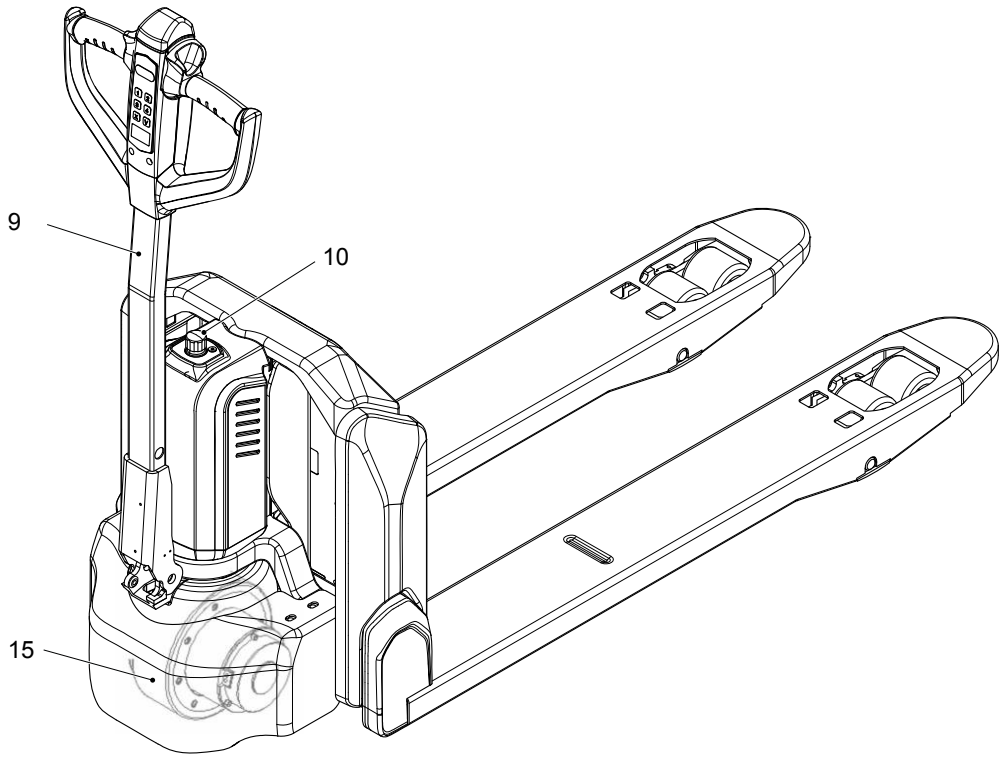


➔ The graphic shows the PTE 1.5 Li-Ion as an example.

***Parking the truck securely***

*Procedure*

- Park the truck on a level surface.
- Fully lower the load handler, see page 86.
- Turn the drive wheel (15) to the straight-ahead position using the tiller (9).
- Press the emergency disconnect switch (10).

*Truck is parked securely.*

# 4 Industrial Truck Operation

## 4.1 Safety regulations for truck operation

### Travel routes and work areas

Only use lanes and routes specifically designated for traffic. Unauthorised third parties must stay away from work areas. The load may only be stored in the designated locations.
The truck must only be operated in work areas with sufficient lighting to avoid danger to personnel and materials.

**⚠ DANGER!**

Do not exceed the permissible surface and point loading on the travel lanes.
At blind spots get a second person to assist.
The driver must ensure that the loading dock /dock leveller cannot be removed or come loose during loading/unloading.

### Conduct while travelling

The operator must adapt the travel speed to local conditions. The truck must be driven at slow speed when negotiating bends or narrow passageways, when passing through swing doors and at blind spots. The operator must always observe an adequate braking distance between the forklift truck and the vehicle in front and must be in control of the truck at all times. Abrupt stopping (except in emergencies), rapid U turns and overtaking at dangerous or blind spots are not permitted.

### Travel visibility

The operator must look in the direction of travel and must always have a clear view of the route ahead. If the truck is carrying loads that affect visibility, the truck must travel against the load direction. If this is not possible, a second person must walk alongside the truck as a lookout to observe the travel route while maintaining eye contact with the operator. Proceed only at walking pace and with particular care. Stop the truck as soon as you lose eye contact.

### Negotiating slopes and inclines

Negotiating slopes and inclines up to 16 % is only permitted when they are recognised lanes. The slopes and inclines must be clean, have a non-slip surface, and negotiating them safely must be within the technical specifications of the truck. The truck must always be driven with the load facing uphill. The industrial truck must not be turned, operated at an angle or parked on inclines or slopes. Inclines must only be negotiated at slow speed, with the driver ready to brake at any moment.

### Negotiating lifts, loading ramps and docks

Lifts may only be negotiated if they have sufficient capacity, are suitable for driving on and authorised for truck traffic by the owner. The driver must satisfy himself of the above before entering these areas. The truck must enter lifts with the load in front and must take up a position which does not allow it to come into contact with the walls of the lift shaft. Persons riding in the lift with the forklift truck must only enter the lift after the truck has come to a rest and must leave the lift before the truck. The driver must ensure that the loading ramp / dock cannot move or come loose during loading / unloading.

### Type of loads to be carried

The operator must make sure that the load is in a satisfactory condition. Loads must always be positioned safely and carefully. Use suitable precautions to prevent parts of the load from tipping or falling down. Prevent liquid loads from sloshing out.

**⚠ WARNING!**

**Electromagnetic influence can result in accidents**

Strong magnets can cause electronic components such as Hall sensors to become damaged, resulting in accidents.

▶ Do not use magnets in the operating area of the truck. Exceptions to this rule are commercial, weak clamping magnets for attaching notices.

## 4.2 Emergency Disconnect

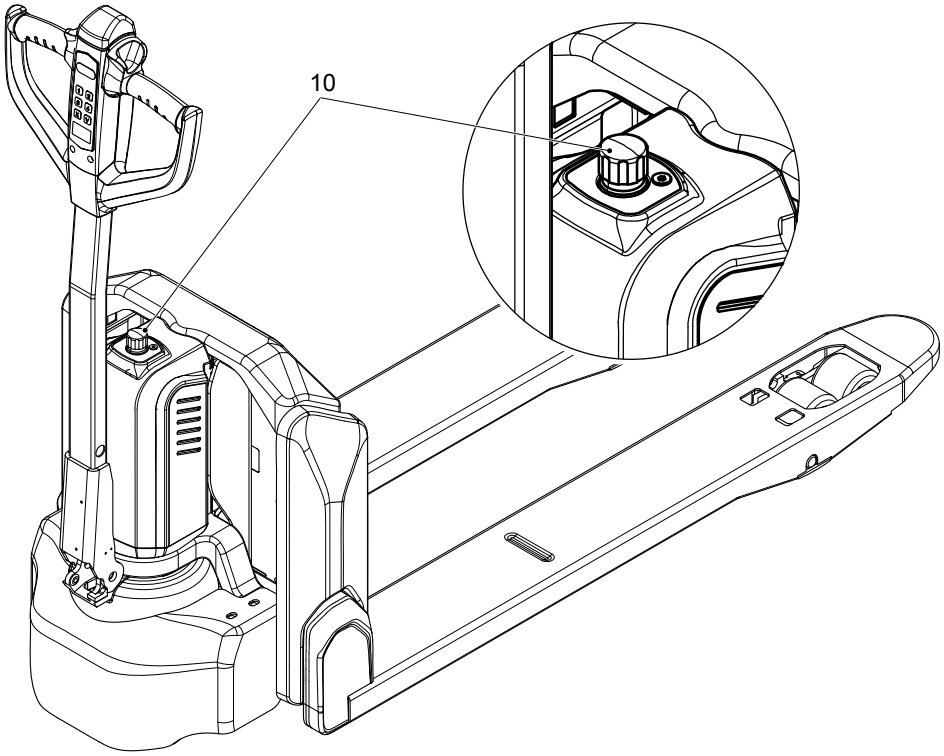


➔ The graphic shows the PTE 1.5 Li-Ion as an example.

***Pressing the Emergency Disconnect switch***

*Procedure*

- Press the Emergency Disconnect (10).

*All electrical functions are deactivated. The truck brakes to a halt at maximum brake force.*

***Releasing the emergency disconnect switch***

*Procedure*

- Turn the emergency disconnect switch (10) to unlock it.

*All electrical functions are enabled and the truck is operational again (assuming the truck was operational before the emergency disconnect switch was pressed).*

## 4.3 Brakes

**⚠ WARNING!**

**Risk of collision due to a defective tiller**

Operating the truck with a defective tiller can lead to collisions with persons or objects.

▶ If the tiller returns to the brake position slowly or not at all, the truck must be taken out of service until the cause of this fault is be rectified.

▶ Contact the manufacturer's customer service department.

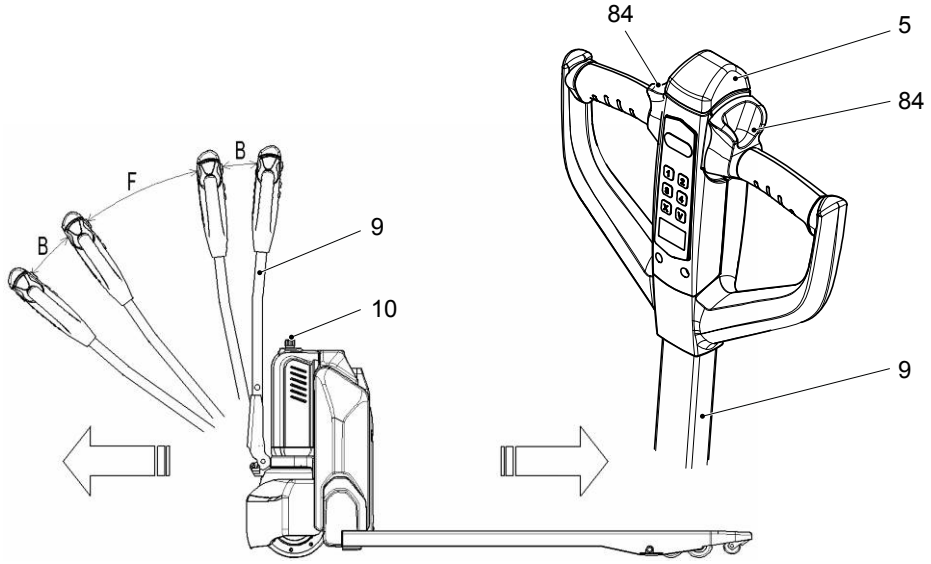


➔ The graphic shows the PTE 1.5 Li-Ion as an example.

The braking behaviour of the truck largely depends on the ground conditions and the truck load. The operator must take this into account.

The truck can brake in different ways:

| **Braking type** | | |
|---|---|---|
| | **Action** | **Effect** |
| Service brake | | |
| | Set the travel switch (84) to the neutral "0" position. | The regenerative brake is activated. The truck brakes to a halt. |
| Travel switch reverse | | |
| | Turn the travel switch (84) in the opposite direction. | The regenerative brake is activated. The truck brakes and begins travelling in the opposite direction. |
| Coasting brake | | |
| | Move the tiller (9) to the brake zone "B".<br>➔ When the tiller is released, it automatically returns to vertical position. | The truck brakes to a halt. |
| Safety brake | | |
| | Operate the collision safety switch (5).<br>➔ This function is also active if the truck is stationary and the tiller is in the travel zone "F". | The truck brakes and travels a short distance in the opposite direction to protect the operator. |
| Emergency brake | | |
| | Press the emergency disconnect switch (10).<br>➔ Only do this in an emergency, as damage to the drive wheel may occur. | The truck brakes to a halt at the maximum rate. |

## 4.4 Travel

**⚠ WARNING!**

**Risk of injury or trapping from the truck**

Be extremely careful when driving and steering, especially if parts of your body extend beyond the truck. The operator's legs and feet could get injured or trapped.

▶Wear personal protective equipment (e.g. safety shoes, ...).

▶In pedestrian mode make sure you have sufficient distance from the truck.

▶Make sure there is nobody between the truck and any obstacles.

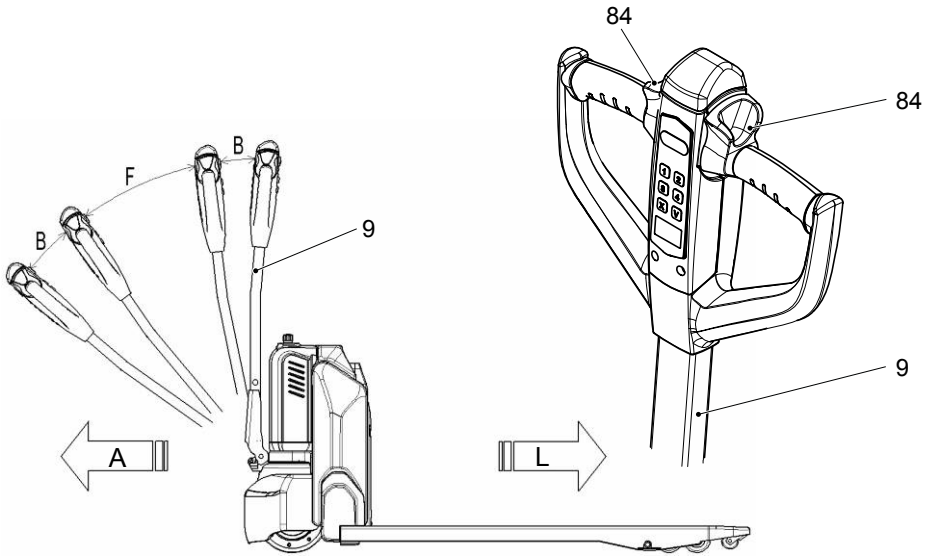


➔ The graphic shows the PTE 1.5 Li-Ion as an example.

*Requirements*

– Commissioning carried out, see page 74.

*Procedure*

- Set the tiller (9) to the travel zone (F).
- Control the travel direction with the travel switch (84):
  - Slowly turn the travel switch in the load direction (L):
    Travel in load direction.
  - Slowly turn the travel switch in the drive direction (A):
    Travel in drive direction.
- Control the travel speed with the travel switch (84):
  - The further the travel switch is turned, the higher the speed.
  - Control the travel speed by turning the travel switch.

*The brake is released and the truck moves in the selected direction.*

## 4.5 Slow travel

PTE 1.1 Li-Ion

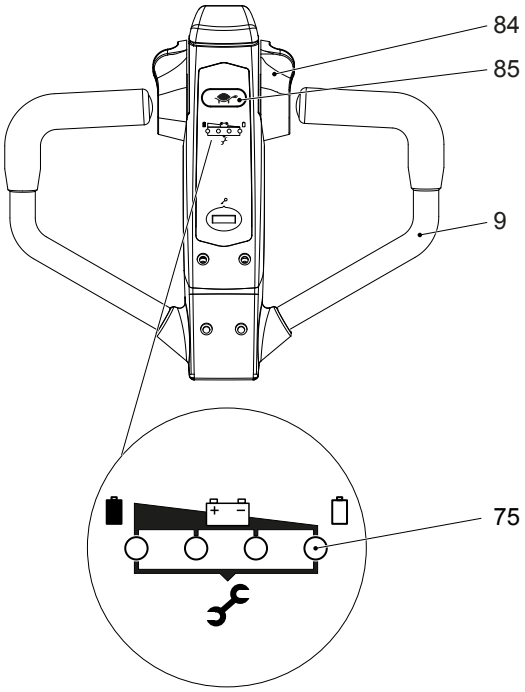


PTE 1.5 Li-Ion

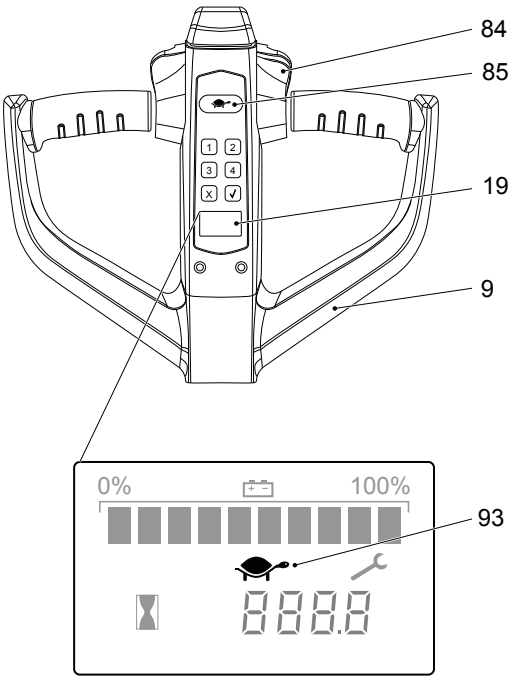


***Operating the truck at slow speed***

*Requirements*

– Truck prepared for operation, see page 75.

*Procedure*

- Slow travel with tiller (9) in travel zone "F":
  - Press the slow travel button (85).
  - Press the travel switch (84) in the desired direction.
  - Press the slow travel button again to resume travelling at normal speed.
- Slow travel with tiller (9) in vertical position in confined spaces:
  - Press the slow travel button (85) for approx. 2 seconds.
  - Press the travel switch (84) in the desired direction.
  - Press the slow travel button again to resume travelling at normal speed.

*The truck can be steered with precision at slow speed and in tight spaces.*

➔ PTE 1.1 Li-Ion: Slow travel is indicated by illumination of the red LED (75).

➔ PTE 1.5 Li-Ion: Slow travel is indicated on the display unit (19) by the tortoise symbol (93).

## 4.6 Steering

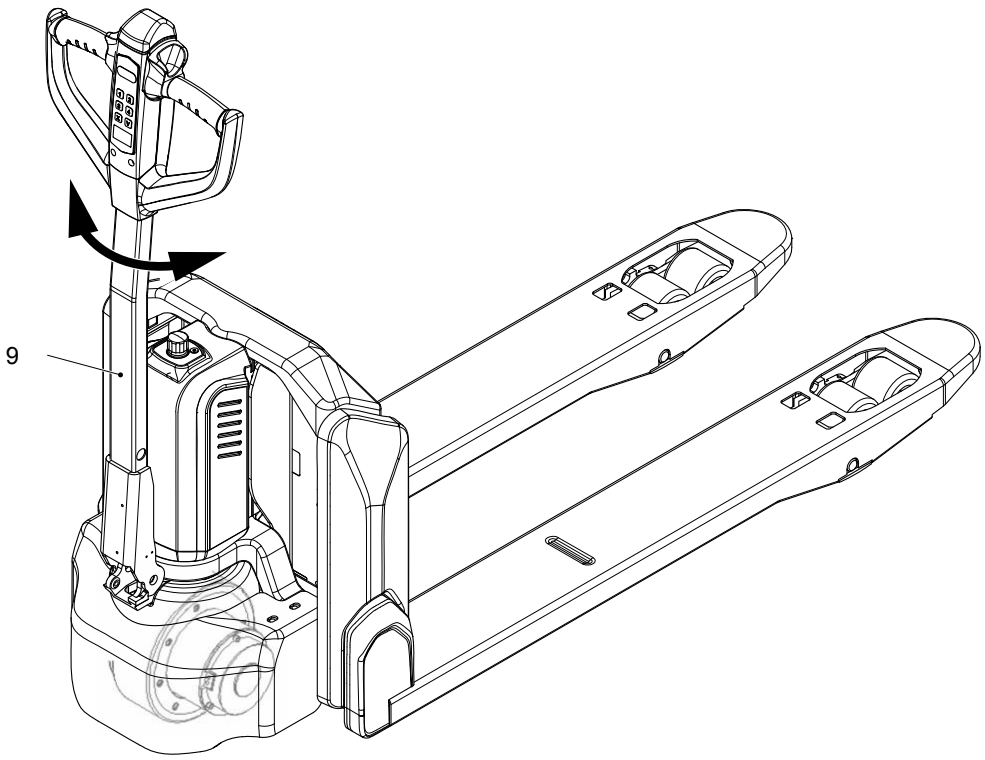


➔ The graphic shows the PTE 1.5 Li-Ion as an example.

*Procedure*

- Move the tiller (9) to the left or right.

*The truck is steered in the required direction.*

## 4.7 Lifting, transporting and depositing loads

**⚠ WARNING!**

**Unsecured and incorrectly positioned loads can cause accidents**

Before lifting a load unit, the driver must make sure that it has been correctly palletised and does not exceed the truck's capacity.

- ▶ Instruct other people to move out of the hazardous area of the truck. Stop working with the truck if people do not leave the hazardous area.
- ▶ Only carry loads that have been correctly secured and positioned. Use suitable precautions to prevent parts of the load from tipping or falling down.
- ▶ Damaged loads must not be transported.
- ▶ Never exceed the maximum loads specified on the load chart.
- ▶ Do not stand on the load handler.
- ▶ Do not lift other people on the load handler.
- ▶ Insert the load handler as far as possible underneath the load.

**⚠ CAUTION!**

- ▶ Do not lift longitudinal goods (e.g. pipes) from the side.

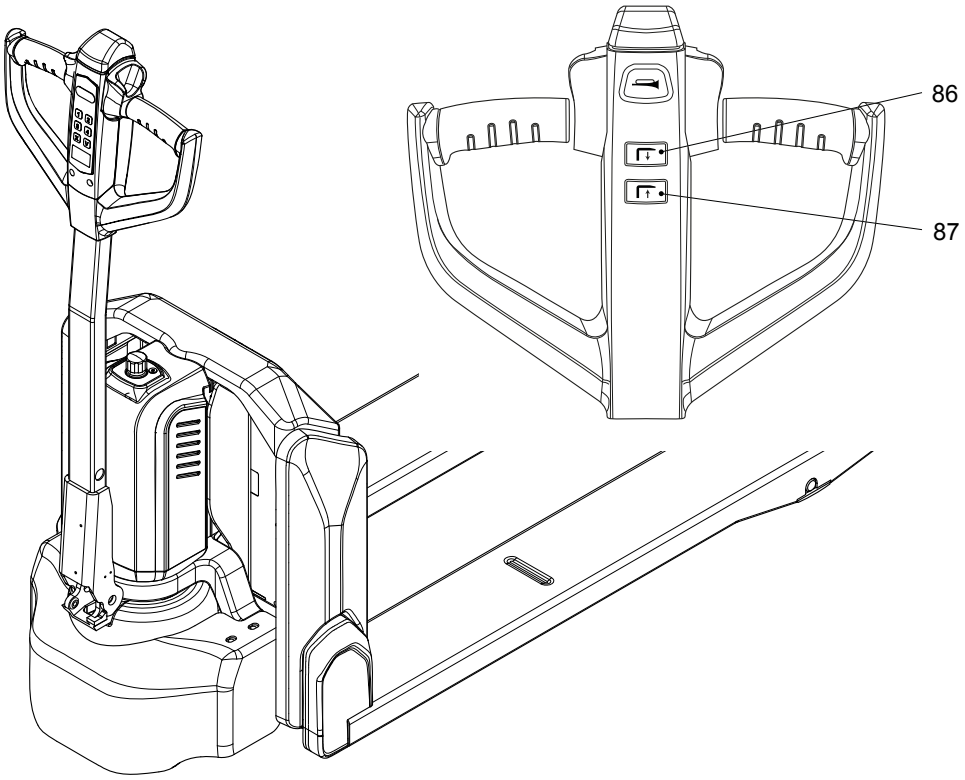


➔ The graphic shows the PTE 1.5 Li-Ion as an example.

*Requirements*

– Load correctly palletised.
– Load weight matches the truck's capacity.
– Forks evenly loaded for heavy loads.

*Procedure*

- Drive the truck carefully up to the pallet.
- Slowly insert the forks into the pallet until the fork shank touches the pallet.

➔ The load must not extend by more than 50 mm beyond the fork tips.

- Press the “Lift” button (86) button until you reach the desired lift height.

*The load is raised.*

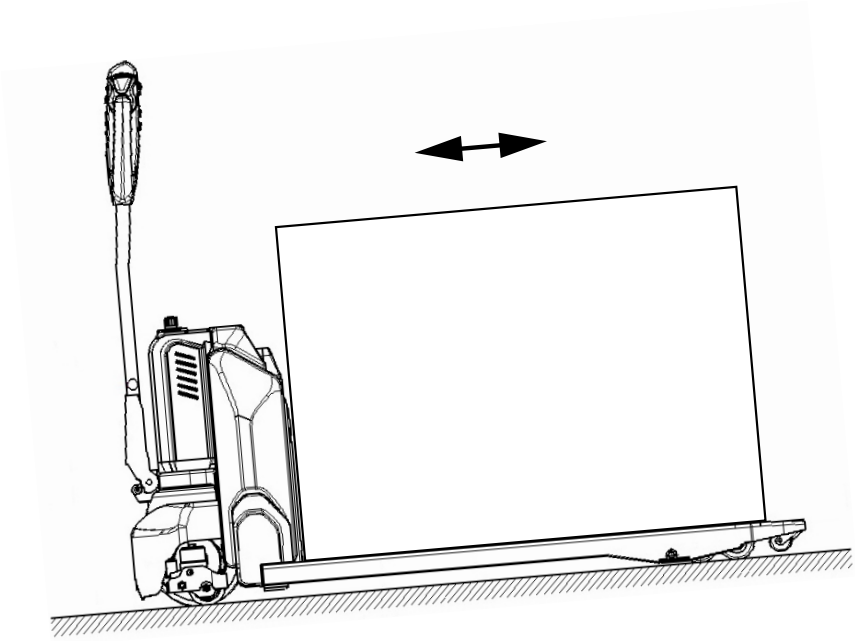

**Transporting Load Units**

*Requirements*

– Load raised correctly.
– Good ground conditions.

*Procedure*

- Accelerate and decelerate with care.
- Adapt your travel speed to the conditions of the route and the load you are transporting.
- Travel at a constant speed.
- Be prepared to brake at all times.
  - Brake gently in normal circumstances.
  - Only stop abruptly in hazardous situations.
- Watch out for other traffic at crossings and passageways.
- Always travel with a lookout at blind spots.
- Do not travel across or at an angle on inclines. Do not turn on slopes and inclines, and always drive with the load facing uphill.

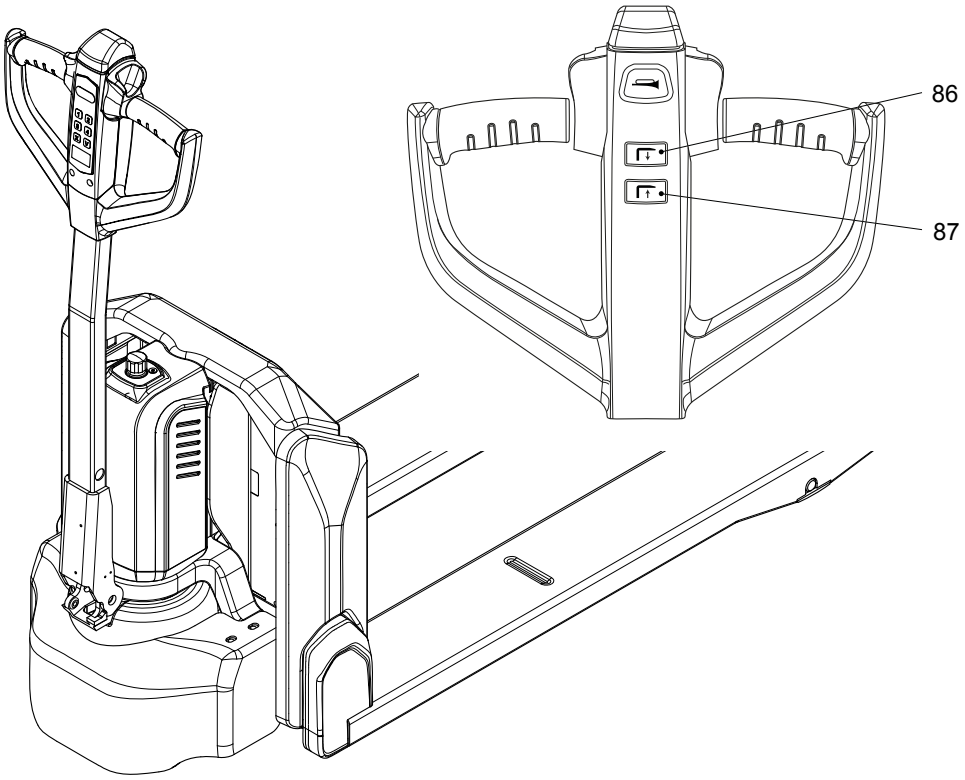


➔ The graphic shows the PTE 1.5 Li-Ion as an example.

### *Depositing load units*

**NOTICE**

Loads must not be deposited on travel or escape routes, in front of safety mechanisms or operating equipment that must be accessible at all times.

*Requirements*

– Warehouse location suitable for storing the load.

*Procedure*

- Drive carefully up to the storage location.
- Press the “Lower load handler” button (87).
- Carefully lower the load handler so that the forks are clear of the load.
- Carefully remove the forks from the pallet.

*The load unit is lowered.*

# 5 Troubleshooting

## 5.1 Troubleshooting

This chapter enables the operator to localize and rectify basic faults or the results of incorrect operation himself. When trying to locate a fault, proceed in the order shown in the remedy table.

➔ If, after carrying out the following remedial action, the truck cannot be restored to operation or if a fault in the electronics system is displayed with a corresponding error code, contact the manufacturer’s service department.
Troubleshooting must only be performed by the manufacturer’s customer service department. The manufacturer has a service department specially trained for these tasks.
In order for customer services to react quickly and specifically to the fault, the following information is essential:
- Truck serial number
- Event message from the display unit (if applicable)
- Error description
- Current location of truck.

| **Load cannot be lifted** | |
|---|---|
| **Cause** | **Remedy** |
| Load weight too high. | Only lift loads up to the maximum capacity, as specified on the type plate, see page 30. |
| Charge status of the battery is low. | Charge the battery, see page 62. |
| Contactor is faulty. | Contact the manufacturer's customer service department. |
| Hydraulic oil level is too low. | Check the hydraulic oil level and top up if necessary, see page 106. |
| Leak in hydraulic system. | Contact the manufacturer's customer service department. |

| **Hydraulic oil leaking from the breather filter** | |
|---|---|
| **Cause** | **Remedy** |
| Hydraulic oil level too high. | Check the hydraulic oil level and drain if necessary, see page 106. |

| Truck does not start | |
|---|---|
| **Cause** | **Remedy** |
| Battery still connected to the battery charger. | Fully charge the battery and disconnect the charger from the battery, see page 59. |
| Battery is not connected correctly. | Check that the battery is correctly attached and locked in place and adjust if necessary, see page 65. |
| Fuses faulty. | Check the fuses and replace if necessary, see page 116. |
| Battery charge status is too low. | Charge the battery, see page 59. |
| Emergency disconnect switch activated. | Release the emergency disconnect switch, see page 80. |
| Tiller in travel zone "F". | Move tiller to brake zone "B", see page 83. |

➔ Do not use the emergency disconnect switch as a service brake; otherwise, wear of the drive wheel will increase significantly.

## 5.2 Faults and Error Messages

**Error source: controller**

| Code | Description | Possible cause(s) |
|---|---|---|
| 0 | LOW BDI<br>(Battery Discharge Indicator)<br>(Low charge status) | Low battery charge status. |
| 1 | PUMP SRO FAULT<br>(Static Return to OFF)<br>(Pump fault, static return off) | The lifting or lowering switch was operated before the key switch. |
| 2 | SRO FAULT<br>(Static Return to OFF)<br>(Fault, static return off) | The operating sequence of direction, lock and key switch is not correct. |
| 3 | HPD FAULT<br>(High Pedal Disable) | The operating sequence of lock and travel switch is not correct, or the travel switch was not reset to neutral position following operation of the emergency disconnect switch. |
| 4 | WAITING FAULT<br>(Maintenance fault) | Travel switch: |
| | | 1. Incorrectly set throttle valve. |
| | | 2. Throttle potentiometer or throttle mechanism defective. |
| 5 | THROTTLE FAULT<br>(Throttle fault) | Travel switch wiring: |
| | | 1. Discontinuity or short-circuit of throttle input cable. |
| | | 2. Throttle potentiometer faulty. |
| 6 | PRECHARGE FAULT<br>(Precharge fault) | Controller fault. |
| 7 | MAIN DRIVER FAULT<br>(Main driver fault) | Internal relay coil defective, replace controller. |
| 8 | MAIN RELAY WELDED<br>(Main relay welded) | 1. Internal relay welded. |
| | | 2. Controller faulty. |
| 9 | MAIN RELAY DNC<br>(Main relay does not pick up) | 1. Close command to internal relay was not executed. |
| | | 2. Internal relay tips oxidised. |
| 10 | BRAKE OFF FAULT<br>(Brake OFF fault) | 1. Electromagnetic brake driver interrupted. |
| | | 2. Electromagnetic brake coil shorted. |
| 11 | MOTOR OVER TEMPERATURE<br>(Motor overheating) | Motor overheating. |
| 12 | BATTERY DISCONNECT FAULT<br>(Battery connection fault) | 1. Battery not connected. |
| | | 2. Poor connection at battery terminals. |

| Code | Description | Possible cause(s) |
|---|---|---|
| 13 | BRAKE ON FAULT (Brake ON fault) | 1. Electromagnetic brake driver shorted. |
| | | 2. Electromagnetic brake coil interrupted. |
| 14 | CURRENT SENSE FAULT (Current direction fault) | Controller fault. |
| 15 | HARDWARE FAULT (Hardware fault) | 1. Motor voltage does not match target voltage of throttle valve. |
| | | 2. Controller fault. |
| 16 | SOFTWARE FAULT (Software fault) | 1. Software faulty. |
| | | 2. Controller faulty. |
| 17 | PARAMETER CHANGE FAULT (Parameter change fault) | 1. A parameter value was changed that requires switching on and off (e.g. throttle type, lock type, driver type, EMR type, pump SRO type, AUX switch input type). |
| | | 2. Parameter reset to default settings. |
| 18 | MOTOR SHORT (Motor short-circuit) | Motor earth fault |
| 19 | MOTOR OPEN (Motor circuit interrupted) | 1. Motor circuit interrupted. |
| | | 2. Faulty motor wiring. |
| | | 3. Controller faulty. |
| 20 | CONTROLLER OVERCURRENT (Controller overcurrent) | Controller faulty. |
| 21 | MOTOR TEMP HOT CUTBACK (Cut-out due to overheating of motor) | 1. Truck overloaded. |
| | | 2. Controller working at extremely high temperature. |
| 22 | CONTROLLER OVERTEMP CUTBACK (Cut-out due to overheating of controller) | 1. Truck overloaded. |
| | | 2. Controller working at high temperature. |
| 23 | CONTROLLER UNDERTEMP (Controller temperature too low) | 1. Controller working at extremely low temperature. |
| | | 2. Temperature sensor defective. |
| 24 | CONTROLLER SEVERE OVERTEMP (Severe overheating of controller) | 1. Truck overloaded. |
| | | 2. Controller working at high temperature. |
| 25 | OVERVOLTAGE CUTBACK (Cut-out due to overvoltage) | 1. Battery voltage > overvoltage cut-out threshold. |
| | | 2. Truck operated with battery charger connected. |
| | | 3. Unstable battery connection. |

| Code | Description | Possible cause(s) |
|---|---|---|
| 26 | SEVERE OVERVOLTAGE (Severe overvoltage) | 1. Battery voltage > 34.0 V |
| | | 2. Truck operated with battery charger connected. |
| | | 3. Unstable battery connection. |
| 27 | UNDERVOLTAGE CUTBACK (Cut-out due to undervoltage) | 1. Battery voltage < 16.8 V |
| | | 2. Poor connection to battery or controller. |
| 28 | SEVERE UNDERVOLTAGE (Severe undervoltage) | Battery voltage < 13.8 V. |
| 29 | PARAMETER FAULT (Parameter fault) | 1. The cyclic redundancy check of the parameters produces an error. |
| | | 2. Controller faulty. |
| 32 | PDO TIMEOUT (Process data object time-out) | Communication between 1212C and CAN bus in tiller interrupted. |
| 33 | LIFT DRIVER FAULT (Lift driver fault) | Discontinuity or short-circuit of lift contactor. |
| 34 | LOWER DRIVER FAULT (Lower driver fault) | Discontinuity or short-circuit of electromagnetic lowering circuit. |
| 36 | BMS PDO TIMEOUT (Process data object time-out in battery management system) | Communication between 1212C and battery management system interrupted. |
| 37 | EMR SEQUENCING FAULT (Sequencing error during EMR) | 1. Emergency disconnect activated before truck was switched on. |
| | | 2. The microswitch inside the emergency disconnect is faulty. |
| | | 3. The cable between the microswitch and controller is faulty. |
| 39 | COAST SRO FAULT (Coasting brake, static return OFF) | Vertical drive activated before key switch, or key switch set from ON to OFF with the vertical drive closed. |

**Error source: tiller**

| Code | Description | Possible cause(s) |
|---|---|---|
| 80 | MODE FAULT<br>(Mode fault) | Slow travel button does not work. |
| 81 | LIFT FAULT<br>(Fault during lifting) | Lift button does not work. |
| 82 | LOWER FAULT<br>(Fault during lowering) | Lower button does not work. |
| 83 | BMS COMMUNICATIONS OUTAGE<br>(Communication failure of battery management system) | Communication with lithium-ion battery interrupted: |
| | | 1. Fault in battery management system. |
| | | 2. Cable between lithium-ion battery and tiller defective. |
| | | 3. The communication module of the tiller is defective. |

**Error source: lithium-ion battery**

| Code | Description | Possible cause(s) |
|---|---|---|
| 90 | OVER VOLTAGE<br>(Overvoltage) | High battery voltage: |
| | | 1. Overload. |
| | | 2. Fault in battery management system. |
| | | 3. Powerful motor current when travelling down a ramp. |
| 91 | OVER DISCHARGE<br>(Excessive discharge) | Battery deep discharged. |
| | | 1. Battery was not used for an extended period. |
| | | 2. Overloaded. |
| 92 | COMMUNICATION OUTAGE<br>(Communication failure) | Communication with battery interrupted. |
| 93 | UNDER VOLTAGE<br>(Undervoltage) | Low battery voltage: |
| | | 1. Discharged. |
| | | 2. Battery cell defective. |

| Code | Description | Possible cause(s) |
|---|---|---|
| 94 | OVER VOLTAGE (Overcurrent) | Overcurrent: |
| | | 1. Unauthorised adjustment of standard parameters. |
| | | 2. Incorrect parameter after replacement of controller. |
| | | 3. Fault during current detection of lithium-ion battery. |
| 95 | OVER TEMPERATURE PROTECT (Overtemperature protection) | Extremely high battery temperature. |
| 96 | TEMPERATURE PROTECT (Heat protection) | High battery temperature. |

# 6 Operating the truck without its own drive system

### Recovering the truck

The truck can be moved without its own drive system only when the drive wheel brake is disassembled.

The brake may be disassembled and assembled only by authorised service personnel.

*Requirements*

– Truck cannot be moved with its own drive system.
– The emergency disconnect switch is actuated, see page 80.
– Working area is secured.

*Tools and Material Required*

– Lifting gear
– Crane lifting gear

*Procedure*

- Unload the truck.
- Secure the lifting gear to the attachment points, see page 31.
- Load the truck onto a suitable transport aid, secure it and transport it away, see page 33

*Truck has been recovered.*

# F Industrial Truck Maintenance

## 1 Spare Parts

To ensure safe and reliable operation, use only the manufacturer's original spare parts.

The manufacturer’s original spare parts are consistent with the manufacturer’s specifications and guarantee the highest possible quality of safety, size accuracy and material.

The installation or use of non-original spare parts can negatively affect the specified properties of the product and impair safety. The manufacturer cannot be held liable for damage caused by the use of non-original spare parts.

The product-related electronic spare parts catalogue can be found at (www.jungheinrich.de/spare-parts-search) by entering the serial number.

➔ The serial number can be found on the data plate, see page 30.

## 2 Operational Safety and Environmental Protection

The inspections and maintenance tasks listed in chapter "Maintenance, Inspection and Changing of Maintenance Parts Requiring Replacement" must be performed according to the defined service intervals (see page 121).

The manufacturer recommends the replacement of the maintenance parts also listed in chapter "Action to be taken during decommissioning" according to the specified replacement intervals (see page 121).

**⚠ WARNING!**

**Risk of accidents and component damage**

Any modification to the truck, in particular the safety mechanisms, is prohibited.

**Exception:** Operating companies should only make changes or have changes made to powered industrial trucks if the manufacturer is no longer operating in the field and there is no successor to the business; operating companies must however:

- Ensure that the changes to be made are planned, tested and performed by a specialist engineer in industrial trucks taking safety into account.
- Keep permanent records of the construction, tests and completion of changes
- Carry out and have authorised the respective changes to the capacity data plates, decals and stickers as well as the operating instructions and workshop manuals
- Attach a permanent and clearly visible marking to the truck indicating the types of changes made, the date of the changes and the name and address of the organisation responsible for the work.

➔ On completion of inspection and service work, carry out the operations listed in the “Recommissioning the truck after cleaning or maintenance work” section (see page 118).

# 3 Maintenance Safety Regulations

The forklift truck should only be serviced and repaired by the manufacturer's specialist customer service personnel who have been trained for this task. We therefore recommend that you enter into a maintenance contract with the manufacturer’s local sales office.

**⚠ CAUTION!**

**Fire hazard**

Do not use flammable liquids to clean the industrial truck.

▶ Always disconnect the battery before starting cleaning work.

▶ Carry out all necessary safety measures to prevent sparking before cleaning (e.g. by short-circuiting).

**⚠ WARNING!**

**Accident risk**

▶ Only suitably trained electricians may operate on the truck's electrical system.

▶ Before working on the electrical system, take all precautionary measures to avoid electric shocks.

▶ Always disconnect the battery before starting work.

---

**⚠ WARNING!**

**Electrical current can cause accidents**

Make sure the electrical system is voltage-free before starting work on it. Before starting maintenance on the electrical system:

▶ Park the truck securely, see page 77.

▶ Press the emergency disconnect switch.

▶ Disconnect the battery.

▶ Remove any rings or metal bracelets etc. before working on electrical components.

---

**⚠ WARNING!**

**Fire hazard**

Welding operations on the truck can damage or ignite components.

▶ Do not performing welding operations on the truck.

---

**⚠ CAUTION!**

**Consumables and used parts are an environmental hazard**

Used parts and consumables must be disposed of in accordance with the applicable environmental-protection regulations. Oil changes should be carried out by the manufacturer's customer service department, whose staff are specially trained for this task.

▶ Note the safety regulations when handling these materials.

---

**⚠ WARNING!**

**The use of wheels that do not match the manufacturer's specifications can result in accidents**

The quality of wheels affects the stability and performance of the truck.

Uneven wear reduces truck stability and increases the stopping distance.

▶ After replacing wheels, make sure the truck is not skewed.

▶ Always replace wheels in pairs, i.e. left and right at the same time.

---

➔ When replacing wheels fitted at the factory, only use the manufacturer’s original spare parts. Otherwise the truck's rated performance cannot be ensured, see page 99.

**⚠ WARNING!**

**Leaky hydraulic systems can result in accidents**

Hydraulic oil can escape from leaky and faulty hydraulic systems.

▶ Report any defects immediately to your supervisor.

▶ Mark defective truck and take out of service.

▶ Do not return the industrial truck to service until you have identified and rectified the fault.

▶ Remove any spilled hydraulic immediately with an appropriate bonding agent.

▶ The bonding agent / consumable mixture must be disposed of in accordance with regulations.

---

### Settings

When repairing or replacing hydraulic, electric or electronic components or assemblies, always note the truck-specific settings.

# 4 Lubricants and Lubrication Schedule

## 4.1 Handling consumables safely

### Handling consumables

Consumables must always be handled correctly. Follow the manufacturer's instructions.

**⚠ WARNING!**

**Improper handling is hazardous to health, life and the environment**

Consumables can be flammable.

- ▶ Keep consumables away from hot components and naked flames.
- ▶ Always keep consumables in prescribed marked containers.
- ▶ Always fill consumables in clean containers.
- ▶ Do not mix up different grades of consumable. The only exception to this is when mixing is expressly stipulated in the Operating Instructions.

**⚠ CAUTION!**

**Spilled consumables can cause slipping and endanger the environment**

Risk of slipping from spilled consumables. The risk is greater when combined with water.

- ▶ Do not spill consumables.
- ▶ Spilled consumables must be removed immediately with an appropriate bonding agent.
- ▶ The bonding agent / consumable mixture must be disposed of in accordance with regulations.

**⚠ WARNING!**

**Improper handling of oils can be hazardous**

Oils (chain spray / hydraulic oil) are flammable and poisonous.

- ▶ Dispose of used oils in accordance with regulations. Store used oil safely until it can be disposed of in accordance with regulations.
- ▶ Do not spill oil.
- ▶ Spilled oils must be removed immediately with an appropriate bonding agent.
- ▶ The mixture consisting of the bonding agent and oil must be disposed of in accordance with regulations.
- ▶ Observe national regulations when handling oils.
- ▶ Wear safety gloves when handling oils.
- ▶ Prevent oil from coming into contact with hot motor parts.
- ▶ Do not smoke when handling oil.
- ▶ Avoid contact and digestion. If you swallow oil do not induce vomiting but seek medical assistance immediately.
- ▶ Seek fresh air after breathing in oil fumes or vapours.
- ▶ If oil has come into contact with your skin, rinse your skin with water.
- ▶ If oil has come into contact with your eyes, rinse them with water and seek medical assistance immediately.
- ▶ Replace oil-soaked clothing and shoes immediately.

**⚠ CAUTION!**

**Consumables and used parts are an environmental hazard**

Used parts and consumables must be disposed of in accordance with the applicable environmental-protection regulations. Oil changes should be carried out by the manufacturer's customer service department, whose staff are specially trained for this task.

- ▶ Note the safety regulations when handling these materials.

## 4.2 Lubrication Schedule

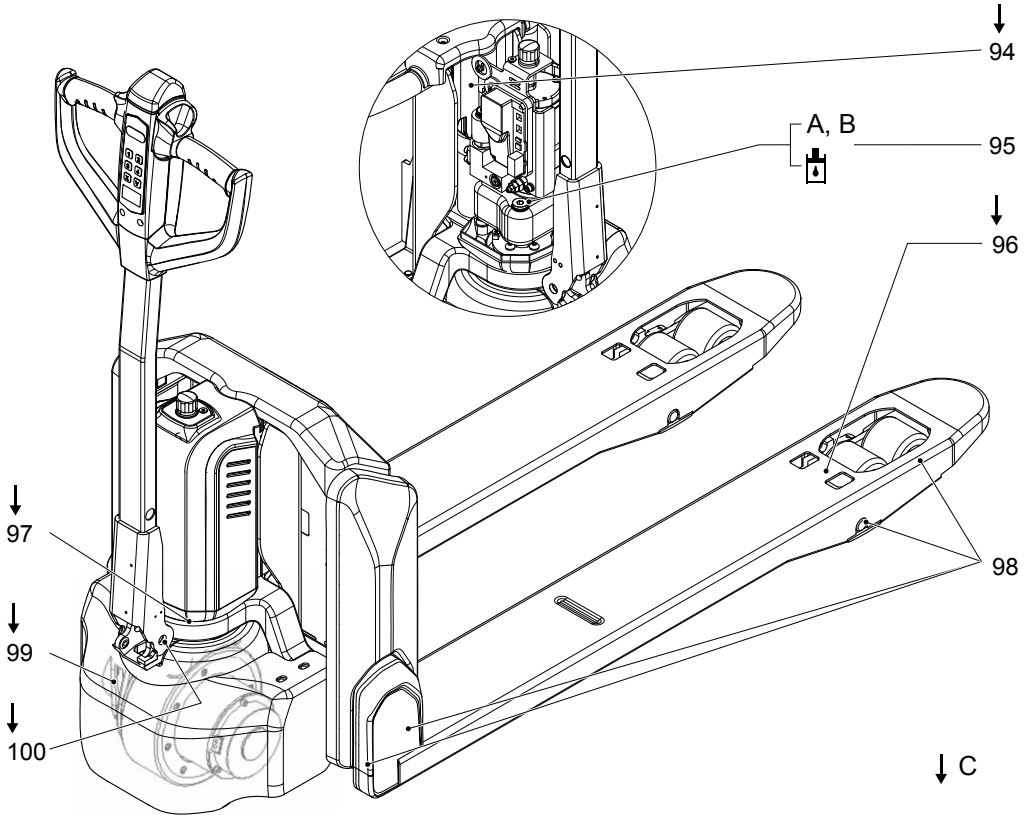


➔ The graphic shows the PTE 1.5 Li-Ion as an example.

| Item | Component | Item | Component |
|---|---|---|---|
| 94 | Lift cylinder (⬇) | 98 | Lift kinematics (⬇) |
| 95 | Filler plug for hydraulic oil (⍈) | 99 | Transmission (⬇) |
| 96 | Load wheel bearing (⬇) | 100 | Tiller bolt (⬇) |
| 97 | Tiller bearing (⬇) | | |

***Lubricate the truck according to the lubrication schedule***

*Requirements*

– The truck is parked securely, see page 77.
– Truck is prepared for maintenance and repair work, see page 108.
– Maintenance interval has been reached, see page 121.

*Tools and Material Required*

– Lubricants according to lubrication schedule, see page 107

*Procedure*

- Lubricate the lubrication points (⬇) according to the lubrication schedule.

➔ Some lubrication points are only lubricated when required.

- Check the hydraulic oil level and top up if necessary (⍈), see page 117.
- Start up the truck, see page 118.

*Truck is lubricated.*

## 4.3 Consumables

| Code | Order no. | Description | Used for | Volume |
|---|---|---|---|---|
| A | 51207593 | Hydraulic oil HVLP 32, DIN 51524 | Hydraulic system -5°C to 25°C [1] | 0.4 l |
| B | 50459855 | Hydraulic oil HLP 46, DIN 51524 | Hydraulic system > 25°C [1] | 0.4 l |
| C | 29200430 | Lubricating grease DIN 51825 | Various bearing points | As required |

[1] Ambient temperature

# 5 Maintenance and repairs

## 5.1 Preparing the truck for maintenance and repairs

*Procedure*

- Unload the truck.
- Park the truck securely, see page 77.
- Disconnect the battery, see page 64

## 5.2 Lifting and jacking up the truck safely

**⚠ WARNING!**

**Risk of accidents when working under the load handler and lift truck**

▶ When working under a raised load handler or a raised truck, secure them to prevent the truck from lowering, tipping or sliding away.

▶ When raising the truck, follow the instructions, see page 31. When working on the parking brake, prevent the truck from accidentally rolling away (e.g. with wedges).

**⚠ WARNING!**

**Lifting and jacking up the truck safely**

In order to raise the truck, the lifting gear must only be secured to the points specially provided for this purpose.

In order to raise and jack up the truck safely, proceed as follows:

▶ Jack up the truck only on a level surface and prevent it from moving accidentally.

▶ Always use a jack with sufficient capacity. When jacking up the burden carrier, take appropriate measures to prevent it from slipping or tipping over (e.g. wedges, wooden blocks).

▶ In order to raise the truck, the lifting accessories must only be secured to the points specially provided for this purpose, see page 31.

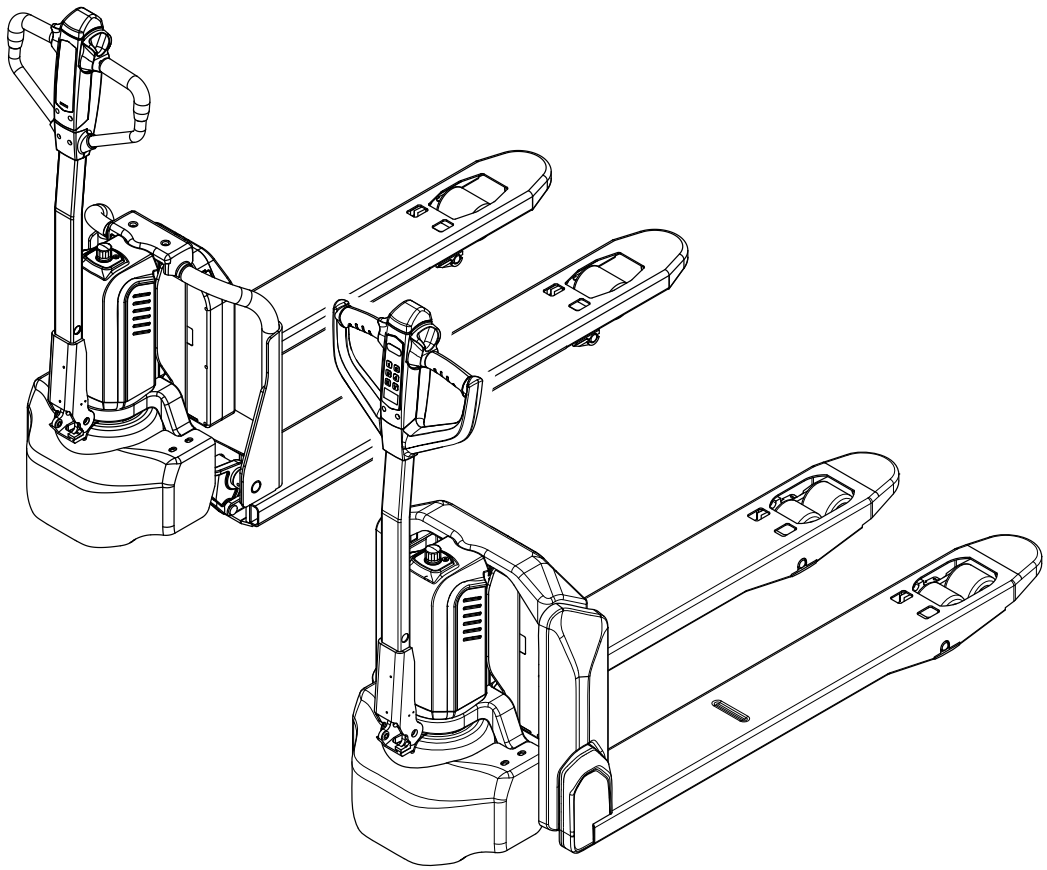

***Raising and jacking up the truck securely***

*Requirements*

– Prepare the truck for maintenance and repairs (see page 108).

*Tools and Material Required*

– Jack
– Hard wooden blocks

*Procedure*

- Place the jack against the contact point.

➔ For jacking the truck, make sure to use the structural parts of the truck as contact point for the jack (e.g. truck chassis).

- Raise the truck.
- Support the truck with hard wooden blocks.
- Remove the jack.

*The truck is now securely raised and jacked up.*

## 5.3 Removing the Covers

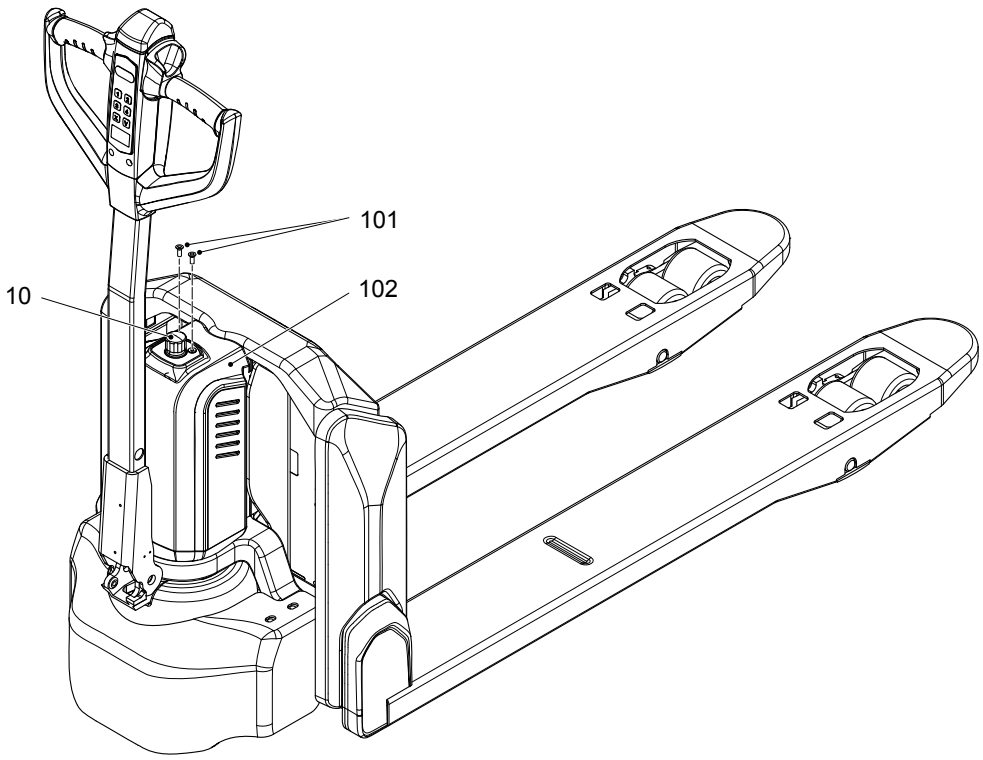


➔ The graphic shows the PTE 1.5 Li-Ion as an example.

***Removing the cover for the hydraulic unit and electrical system***

*Requirements*

– The truck is parked securely, see page 77.

*Tools and Material Required*

– Allen key, key width 4 mm

*Procedure*

- Remove the 2 Allen screws (101).
- Lift off the cover (102) over the emergency disconnect switch (10) and set it down securely.

*Cover for the hydraulic unit and electrical system has been removed.*

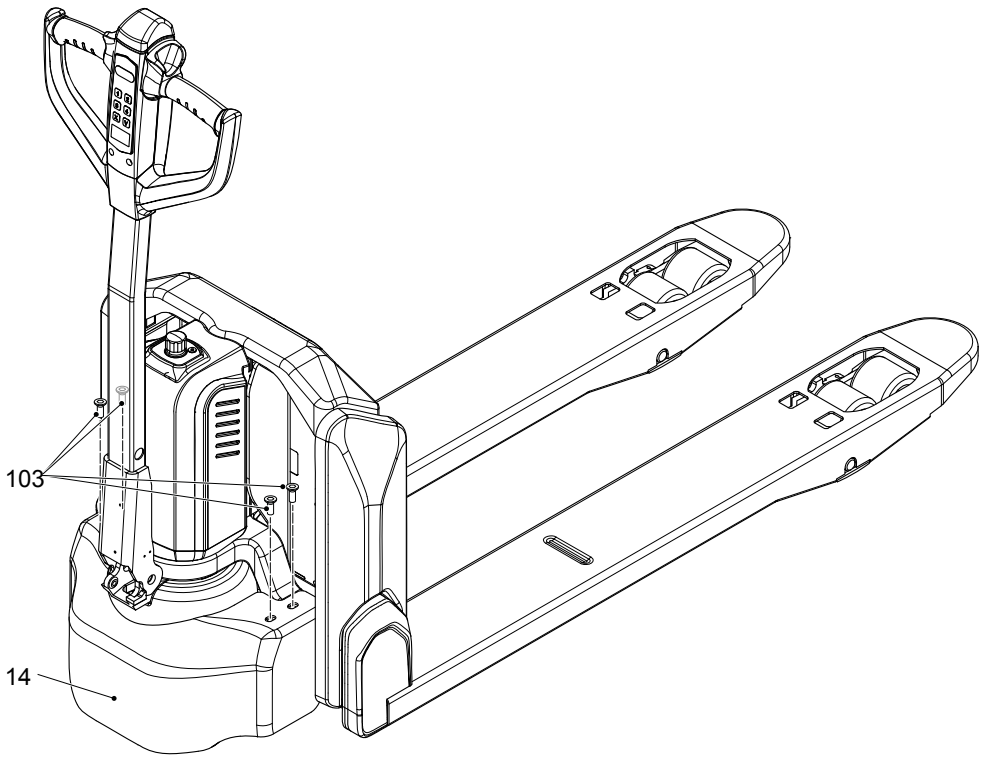


➔ The graphic shows the PTE 1.5 Li-Ion as an example.

### *Removing the bumper*

*Requirements*

– The truck is parked securely, see page 77.

*Tools and Material Required*

– Allen key, key width 6 mm

*Procedure*

- Remove the 2 Allen screws (103) on both sides of the bumper (14).
- Lift off the bumper and set it down securely.

*Bumper has been removed.*

## 5.4 Cleaning

### 5.4.1 Cleaning the truck

**⚠ CAUTION!**

**Fire hazard**

Do not use flammable liquids to clean the industrial truck.

▶ Always disconnect the battery before starting cleaning work.

▶ Carry out all necessary safety measures to prevent sparking before cleaning (e.g. by short-circuiting).

---

➔ The truck may only be cleaned in the designated locations, which adhere to the stipulations of the country of use.

***Cleaning the truck***

*Requirements*

– Truck prepared for maintenance and repair work, see page 108.

*Tools and Material Required*

– Water-based solvents
– Sponge or cloth

*Procedure*

- Clean the surface of the truck with water-based solvents and water. Use a sponge or cloth to clean.
- Dry the truck after cleaning, e.g. with compressed air or a dry cloth.
- Carry out all the tasks in the section "Recommissioning the truck after cleaning or maintenance work" (see page 118).

*The truck is now clean.*

### 5.4.2 Cleaning the electrical system assemblies

**⚠ CAUTION!**

**Risk of electrical system damage**

Cleaning the assemblies (controllers, sensors, motors etc.) of the electronic system with water can damage the electrical system.

▶ Do not clean the electrical system with water.

▶ Clean the electrical system with weak suction or compressed air (use a compressor with a water trap) and not a conductive, anti-static brush.

***Cleaning the electrical system assemblies***

*Requirements*

– Truck prepared for maintenance and repair work (see page 108).

*Tools and Material Required*

– Compressor with water separator
– Non-conductive, antistatic brush

*Procedure*

- Expose the electrical system, see page 111.
- Clean the electrical system assemblies with weak suction or compressed air (use a compressor with a water separator) and a non-conductive, anti-static brush.
- Fit the electrical system panel, see page 111.
- Carry out all the tasks in the section "Recommissioning the truck after cleaning or maintenance work" (see page 118).

*The electrical system assemblies are now clean.*

## 5.5 Checking the drive wheel and load wheels

➔ Wheels must only be replaced by authorised service personnel.

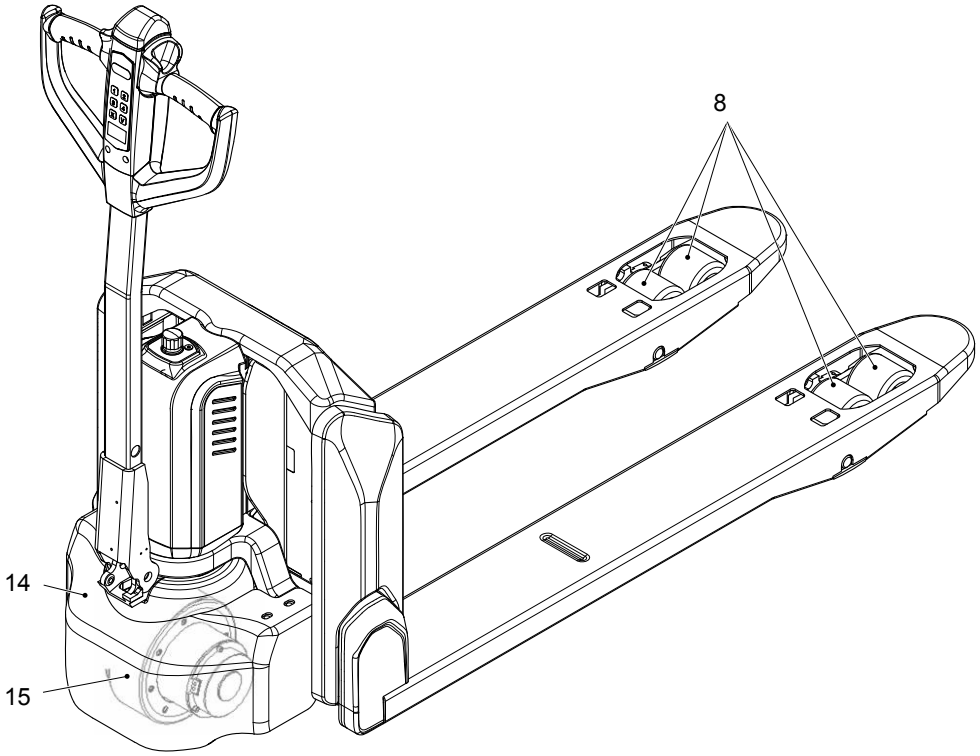


➔ The graphic shows the PTE 1.5 Li-Ion as an example.

*Procedure*

- Remove the bumper (14), see page 111.
- Check the drive wheel (15) and load wheels (8) for wear, damage and freedom of movement.

➔ A new drive wheel has a diameter of 210 mm. The drive wheel must be replaced when it has reached a diameter of 197 mm or a residual thickness of 6.5 mm.

➔ The wheels must be round and must not have excessive abrasion.

- Fit the bumper.

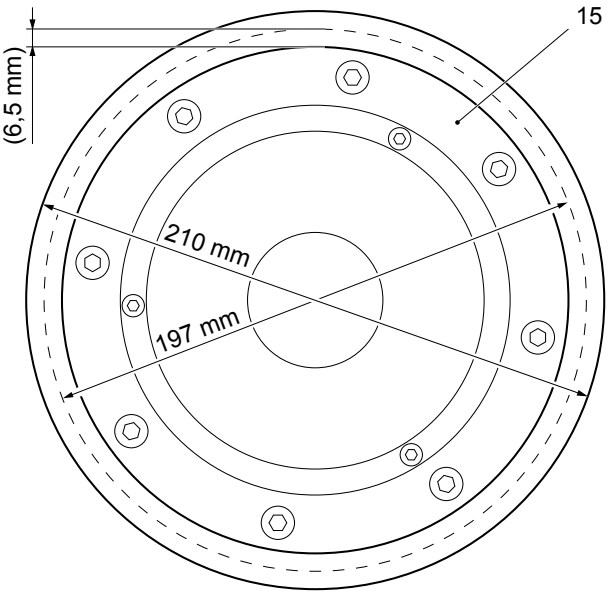

## 5.6 Checking electrical fuses

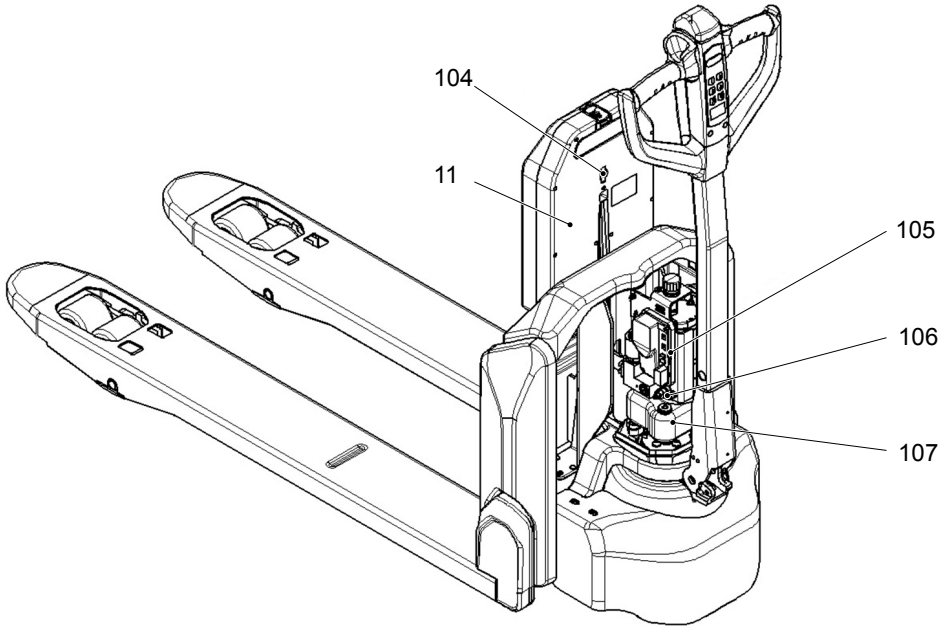


➔ The graphic shows the PTE 1.5 Li-Ion as an example.

| Fuse | Rating | Installation location |
|---|---|---|
| FU1 (104)<br>Control circuit | 10 A | Between hydraulic reservoir (107) and controller (105) |
| FU 01 (106)<br>Battery | 70 A | On the reverse of the battery (11) |

***Checking electrical fuses***

*Requirements*

– Truck is prepared for maintenance and repair work, see page 108.
– Cover for the hydraulic unit and electrical system has been removed, see page 111.

*Procedure*

- Check fuse FU1 (104) for correct rating and condition, and replace if necessary.
- Fit the cover.
- Remove the battery (11), see page 64.
- Check fuse FU01 (106) for correct rating and condition, and replace if necessary.
- Install the battery, see page 65.

*The fuses have been checked.*

## 5.7 Checking the hydraulic oil level

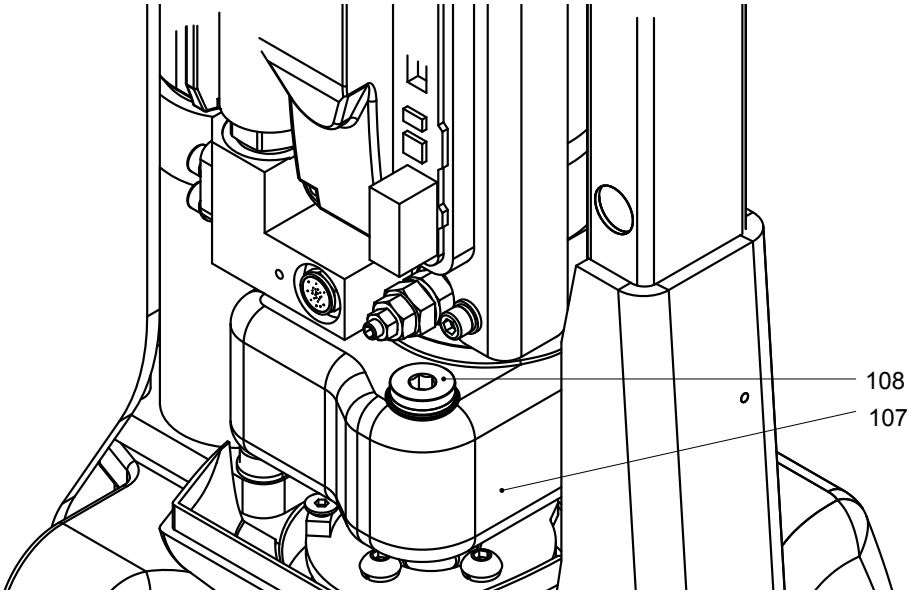


***Checking the hydraulic oil level and replenishing if necessary***

*Requirements*

– Load handler is fully lowered.
– Truck is prepared for maintenance and repair work, see page 108.

*Procedure*

- Remove the cover for the hydraulic unit, see page 111.
- Check the oil level in the hydraulic reservoir (107).

➔ When the load handler is fully lowered, the hydraulic oil level must be between the min and max markings.

- Add hydraulic oil if necessary:
  - Unscrew the cap (108) from the hydraulic reservoir (107).
  - Add hydraulic oil of the correct grade until the hydraulic oil level lies within the target range (see page 107).
  - Screw the cap (108) onto the hydraulic reservoir (107).
- Fit the cover onto the hydraulic unit, see page 111.
- Restore the truck to service after maintenance and repairs, see page 118.

*The hydraulic oil level is correct.*

➔ If a leak is detected in the hydraulic system, the truck must be decommissioned and repaired by specialist personnel.

## 5.8 Restoring the truck to service after maintenance and repairs

*Procedure*

- Thoroughly clean the truck, see page 113.
- Lubricate the truck according to the lubrication diagram, see page 106.
- Charge the battery, see page 59.
- Start up the truck, see page 74.

# 6 Decommissioning the industrial truck

If the truck is to be out of service for more than a month, it must be stored in a frost-free and dry room. All necessary measures must be taken before, during and after decommissioning as described hereafter.

When the truck is out of service it must be jacked up so that all the wheels are clear of the ground. This is the only way of ensuring that the wheels and wheel bearings are not damaged.

➔ Jack up the truck, see page 101.

If the truck is to be out of service for more than 6 months, agree further measures with the manufacturer's customer service department.

## 6.1 Prior to decommissioning

*Procedure*

- Park the truck securely, see page 77.
- Clean the truck, see page 113.
- Check the hydraulic oil level and replenish if necessary, see page 117.
- Apply a thin layer of oil or grease to any non-painted mechanical components.
- Lubricate the truck according to the lubrication diagram, see page 106.
- Charge the battery, see page 59.
- Drive the truck to the storage location and jack it up, see page 101.
- Remove the battery, see page 119.
- Check the battery charge at regular intervals, see page 119.

➔ Final de-commissioning or disposal of the truck in must be performed in accordance with the regulations of the country of use. In particular, regulations governing the disposal of batteries, consumables and electronic and electrical systems must be observed.

The truck must only be disassembled by trained personnel in accordance with the procedures as specified by the manufacturer.

## 6.2 Action to be taken during decommissioning

**NOTICE**

**Full discharge can damage the battery**

Self-discharge can cause the battery to fully discharge. Full discharge shortens the service life of the battery.

▶Before a long period of inactivity, the battery must be fully charged.

▶Charge the battery at least every 12 weeks, see page 59.

## 6.3 Restoring the truck to service after decommissioning

*Procedure*

- Thoroughly clean the truck, see page 113.
- Lubricate the truck according to the lubrication diagram, see page 106.
- Charge the battery, see page 59.
- Start up the truck, see page 74.

# 7 Safety tests to be performed at intervals and after unusual incidents

The truck must be inspected at least annually (refer to national regulations) or after any unusual event by a qualified inspector. The manufacturer offers a safety inspection service which is performed by personnel specifically trained for this purpose.

A complete test must be carried out on the technical condition of the truck with regard to safety. The truck must also be examined thoroughly for damage.

The operating company is responsible for ensuring that faults are rectified immediately.

# 8 Final de-commissioning, disposal

➔ Final de-commissioning or disposal of the truck in must be performed in accordance with the regulations of the country of use. In particular, regulations governing the disposal of batteries, consumables and electronic and electrical systems must be observed.

The truck must only be disassembled by trained personnel in accordance with the procedures as specified by the manufacturer.

# G Maintenance, Inspection and Changing of Maintenance Parts Requiring Replacement

**⚠ WARNING!**

**Lack of maintenance can result in accidents**

Failure to perform regular maintenance and inspections can lead to truck failure and poses a potential hazard to personnel and equipment.

▶ Thorough and expert maintenance and inspections are among the most important requirements for the safe operation of the industrial truck.

***NOTICE***

The application conditions of an industrial truck have a considerable impact on component wear. The following service, inspection and replacement intervals are based on single-shift operation under normal operating conditions. The intervals must be reduced accordingly if more stringent requirements are placed on the equipment, e.g., use in conditions of extreme dust, temperature fluctuations or multiple shifts.

▶ To prevent damage due to wear, the manufacturer recommends an on-site application analysis to agree on appropriate intervals.

The following chapter defines the tasks to be performed, the respective intervals to be observed and the maintenance parts for which replacement is recommended.

# 1 Maintenance Contents PTE 15N

Issued on: 2020-02-28 08:00

## 1.1 Owner

To be performed every 50 service hours, but at least once a week.

### 1.1.1 Maintenance contents

#### 1.1.1.1 Standard equipment

| **Brakes** |
| --- |
| Test the function of the brakes |

| **Hydraulic operations** |
| --- |
| Correct the hydraulic oil level. |

| **Steering** |
| --- |
| Test the tiller return function. |

### 1.1.2 Inspection contents

#### 1.1.2.1 Standard equipment

The following points must be checked:

| **Electrical system** |
|---|
| Warning and safety devices are in accordance with the operating instructions |
| Function of display and controls |
| The function of the emergency disconnect and for damage |

| **Power supply** |
|---|
| Battery and battery components for damage |
| The function and secure seating of the battery connector and for damage |

| **Chassis/structure** |
|---|
| Labels are legible, complete and plausible |
| Doors or covers for damage |

| **Hydraulic operations** |
|---|
| The function of the hydraulic system |
| The forks or load handler for wear and damage |

## 1.2 Customer Service

In accordance with the PTE 15N service interval, to be performed every 1000 service hours, but at least once a year.

### 1.2.1 Maintenance contents

#### 1.2.1.1 Standard equipment

| **Brakes** |
|---|
| Test the function of the brakes |
| Adjust the air gap of the magnetic brake. |
| Measure the air gap of the magnetic brake. |

| **Electrical system** |
|---|
| Adjust the microswitches. |
| Test key switch or alternative access system including the access rights. |
| Test the contactors and/or relays. |
| Carry out a chassis insulation-resistance test. |
| Clean the motor (engine?) with compressed air. |

| **Power supply** |
|---|
| Measure the battery voltage. |

| **Hydraulic operations** |
|---|
| Adjust the lift mechanism. |
| Correct the hydraulic oil level. |
| Test and adjust the pressure relief valve. |

| **Agreed services** |
|---|
| Carry out a test run with the rated load or a customer-specific load. |
| Demonstration after maintenance. |
| Lubricate truck according to the lubrication diagram. |

| **Steering** |
|---|
| Test the tiller return function. |

| **Battery charger** |
|---|
| Test the immobiliser on trucks with on-board chargers. |
| Carry out a potential measurement on the chassis while charging is in progress. |

### 1.2.2 Inspection contents

The following points must be checked:

#### 1.2.2.1 Standard equipment

| **Electrical system** |
|---|
| Cables and engine are secure and for damage |
| Warning and safety devices are in accordance with the operating instructions |
| Function of display and controls |
| Microswitches for function and damage |
| The function of the emergency disconnect and for damage |
| Contactors and/or relays for wear and damage |
| The electric wiring for damage (insulation damage, connections) and the fuse ratings |
| Carbon brushes for wear |
| Connections and cables are secure and for insulation damage and other damage |

| **Power supply** |
|---|
| Battery and battery components for damage |
| The function of the battery latch and battery attachment and for damage |
| The function and secure seating of the battery connector and for damage |

| **Travel** |
|---|
| Drivetrain bearings for wear and damage |
| Transmission for noise and leaks |
| Wheel bearings and attachment for wear and damage |
| Wheels for wear, damage and secure mounting |

| **Chassis/structure** |
|---|
| The secure seating of the chassis and screw connections and for damage |
| Labels are legible, complete and plausible |
| Doors or covers for damage |

| **Hydraulic operations** |
|---|
| The function of the "hydraulic system" controls and for legibility, completeness and plausibility |
| The function of the lift mechanism and for wear and damage |
| The secure seating of the cylinders and piston rods and for leaks and damage |
| The function of the hydraulic system |
| The secure seating of the hydraulic connections, hoses and pipes and for leaks and damage |
| The forks or load handler for wear and damage |
| Tie/plunger rods are uniformly adjusted and for wear and damage |

| Steering |
| --- |
| The mechanical parts of the steering column for wear and damage |

### 1.2.3 Maintenance parts

The manufacturer recommends the replacement of the following maintenance parts at the specified intervals.

#### 1.2.3.1 Standard equipment

| maintenance part | service hours | months |
|---|---|---|
| Hydraulic oil | 2000 | 12 |
| Hydraulic system - breather filter | 2000 | 12 |

# 2 Maintenance Contents PTE 1.1

Issued on: 2020-03-06 10:30

## 2.1 Owner

To be performed every 50 service hours, but at least once a week.

### 2.1.1 Maintenance contents

#### 2.1.1.1 Standard equipment

| **Brakes** |
| --- |
| Test the function of the brakes |

| **Hydraulic operations** |
| --- |
| Correct the hydraulic oil level. |

| **Steering** |
| --- |
| Test the tiller return function. |

### 2.1.2 Inspection contents

#### 2.1.2.1 Standard equipment

The following points must be checked:

| **Electrical system** |
|---|
| Warning and safety devices are in accordance with the operating instructions |
| Function of display and controls |
| The function of the emergency disconnect and for damage |

| **Power supply** |
|---|
| Battery and battery components for damage |
| The function and secure seating of the battery connector and for damage |

| **Chassis/structure** |
|---|
| Labels are legible, complete and plausible |
| Doors or covers for damage |

| **Hydraulic operations** |
|---|
| The function of the hydraulic system |
| The forks or load handler for wear and damage |

## 2.2 Customer Service

In accordance with the PTE 1.1 service interval, to be performed every service hours, but at least once a year.

### 2.2.1 Maintenance contents

#### 2.2.1.1 Standard equipment

| **Brakes** |
|---|
| Test the function of the brakes |
| Adjust the air gap of the magnetic brake. |
| Measure the air gap of the magnetic brake. |

| **Electrical system** |
|---|
| Adjust the microswitches. |
| Test key switch or alternative access system including the access rights. |
| Test the contactors and/or relays. |
| Carry out a chassis insulation-resistance test. |
| Clean the motor (engine?) with compressed air. |

| **Power supply** |
|---|
| Measure the battery voltage. |

| **Hydraulic operations** |
|---|
| Adjust the lift mechanism. |
| Correct the hydraulic oil level. |
| Test and adjust the pressure relief valve. |

| **Agreed services** |
|---|
| Carry out a test run with the rated load or a customer-specific load. |
| Demonstration after maintenance. |
| Lubricate truck according to the lubrication diagram. |

| **Steering** |
|---|
| Test the tiller return function. |

| **Battery charger** |
|---|
| Test the immobiliser on trucks with on-board chargers. |
| Carry out a potential measurement on the chassis while charging is in progress. |

### 2.2.2 Inspection contents

The following points must be checked:

#### 2.2.2.1 Standard equipment

| **Electrical system** |
|---|
| Cables and engine are secure and for damage |
| Warning and safety devices are in accordance with the operating instructions |
| Function of display and controls |
| Microswitches for function and damage |
| The function of the emergency disconnect and for damage |
| Contactors and/or relays for wear and damage |
| The electric wiring for damage (insulation damage, connections) and the fuse ratings |
| Carbon brushes for wear |
| Connections and cables are secure and for insulation damage and other damage |

| **Power supply** |
|---|
| Battery and battery components for damage |
| The function of the battery latch and battery attachment and for damage |
| The function and secure seating of the battery connector and for damage |

| **Travel** |
|---|
| Drivetrain bearings for wear and damage |
| Transmission for noise and leaks |
| Wheel bearings and attachment for wear and damage |
| Wheels for wear, damage and secure mounting |

| **Chassis/structure** |
|---|
| The secure seating of the chassis and screw connections and for damage |
| Labels are legible, complete and plausible |
| Doors or covers for damage |

| **Hydraulic operations** |
|---|
| The function of the "hydraulic system" controls and for legibility, completeness and plausibility |
| The function of the lift mechanism and for wear and damage |
| The secure seating of the cylinders and piston rods and for leaks and damage |
| The function of the hydraulic system |
| The secure seating of the hydraulic connections, hoses and pipes and for leaks and damage |
| The forks or load handler for wear and damage |
| Tie/plunger rods are uniformly adjusted and for wear and damage |

| **Steering** |
| --- |
| The mechanical parts of the steering column for wear and damage |

### 2.2.3 Maintenance parts

The manufacturer recommends the replacement of the following maintenance parts at the specified intervals.

#### 2.2.3.1 Standard equipment

| maintenance part | service hours | months |
|---|---|---|
| Hydraulic oil | 2000 | 12 |
| Hydraulic system - breather filter | 2000 | 12 |