C-B

4,000 - 5,000 kg Capacity

Specifications

Electric Counterbalance Lift Truck
80 V

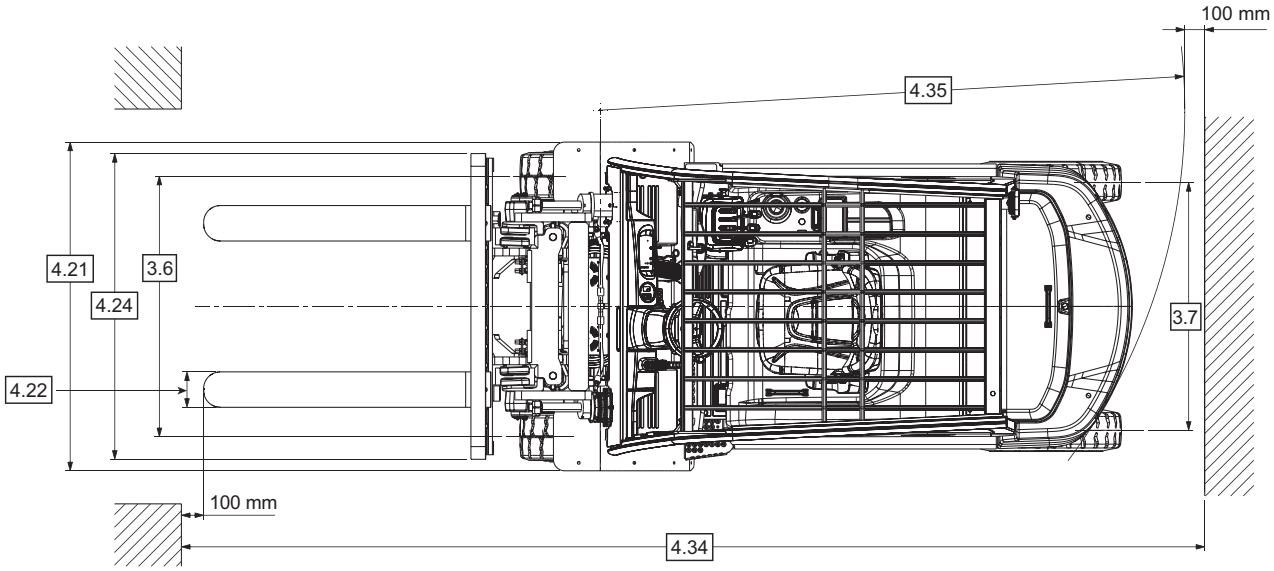
100 mm
4.35
4.21
3.6
4.24
3.7
4.22
100 mm
4.34

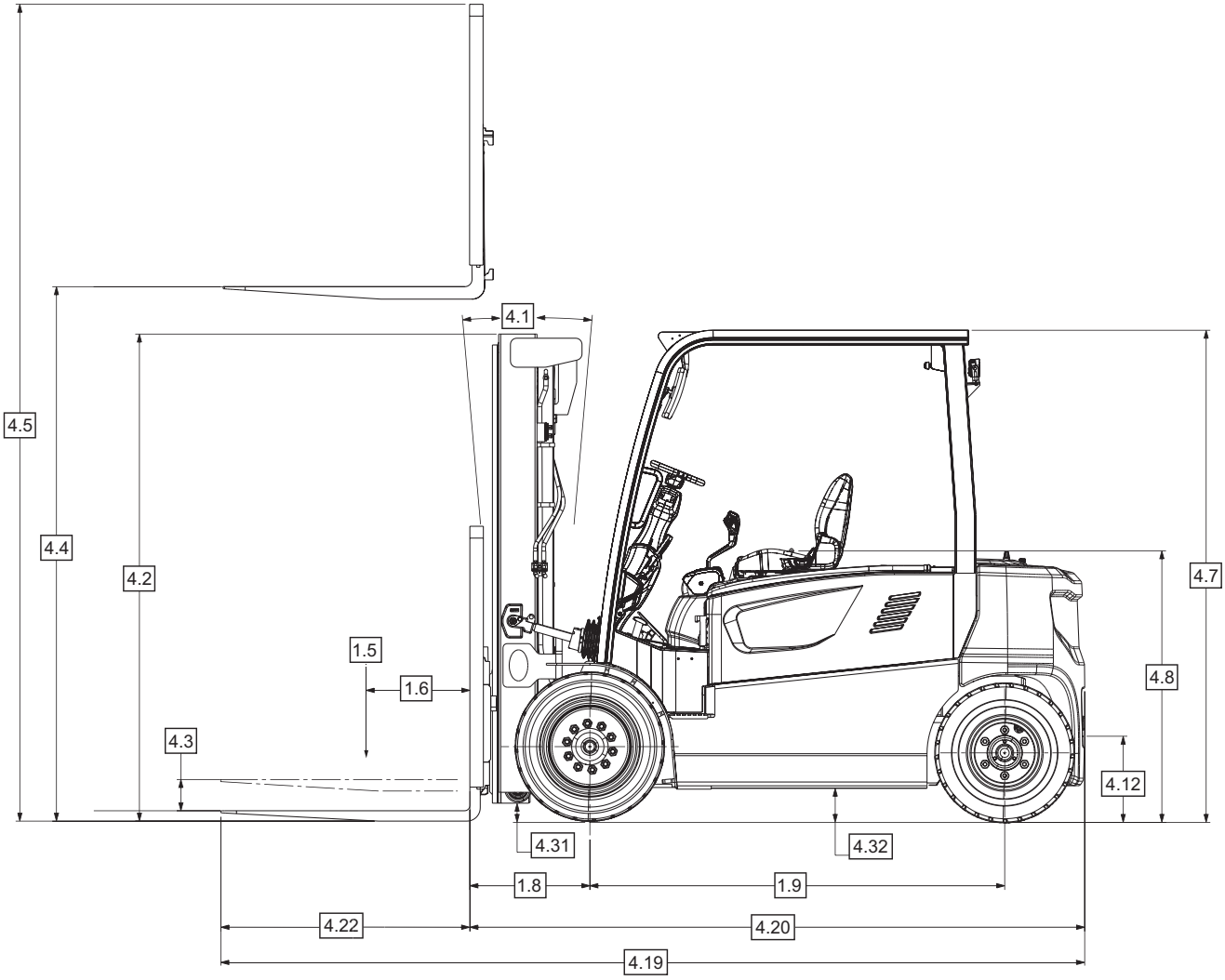
4.1
4.5
4.4
4.2
4.7
1.5
1.6
4.8
4.3
4.12
4.31
4.32
1.8
1.9
4.22
4.20
4.19

Distinguishing Mark	1.2	**Model**				**C-B 40 X-7**	**C-B 45 X-7**	**C-B 50 XC-7**	**C-B 50 X-7**
	1.3	**Power Source**	Electric, Diesel, LPG, Gasoline			Electric			
	1.4	**Operator Type**				Sit-down Rider Counterbalance			
	1.5	**Rated Capacity**		Q	t	4.0	4.5	4.99	5.0
	1.6	**Load Centre**		c	mm	500			
	1.8	**Load Distance**	Center of wheel to fork face	x	mm	572			
	1.9	**Wheelbase**		y	mm	2000			
Weight	2.1	**Service Weight**			kg	4852	5267	5574	5603
	2.2	**Axle Load**	With load front / rear		kg	9874 / 1138	10607 / 1320	11415 / 1318	11450 / 1312
	2.3	**Axle Load**	Without load front / rear		kg	3730 / 3282	3695 / 3732	3735 / 3998	3770 / 3992
Tyres/Wheels/Chassis	3.1	**Tyres**				Super Elastic			
	3.2	**Tyre Size**	Front, OD x Width x Rim Dia.		mm	250 - 15	28 x 12.5 - 15		
	3.3	**Tyre Size**	Rear, OD x Width x Rim Dia.		mm	7.00 -12			
	3.5	**Wheels**	Number (x=driven) front/rear			2x / 2			
	3.6	**Tread**	Front	b_{10}	mm	1168	1160		
	3.7	**Tread**	Rear	b_{11}	mm	1111			
Dimensions	4.1	**Mast Tilt, Fork Carriage**	Forward / backward		°	see mast chart			
	4.2	**Mast Collapsed Height**		h_1	mm				
	4.3	**Free-lift**		h_2	mm				
	4.4	**Lift Height**		h_3	mm				
	4.5	**Mast Extended Height**		h_4	mm				
	4.7	**Overhead Guard Height**		h_6	mm	2345	2350		
	4.8	**Seat Height**	Relating to SIP/stand height	h_7	mm	1297	1303		
	4.12	**Coupler Height**		h_{10}	mm	415			
	4.19	**Overall Length**		l_1	mm	4007		4037	
	4.20	**Head Length**	Length to fork face	l_2	mm	2957		2987	
	4.21	**Overall Width**	Single tyres / double tyres	b_1	mm	1470 / 1735			
	4.22	**Fork Dimension**	DIN ISO 2331	s/e/l	mm	50 x 150 x 1200			
	4.23	**Fork Carriage**	ISO 2328, Class/Type A		class	III A			IV A
	4.24	**Fork Carriage Width**		b_3	mm	1250			1330
	4.31	**Ground Clearance**	With load, below mast	m_1	mm	120	130		
	4.32		With load, centre wheelbase	m_2	mm	160			
	4.34.1	**Aisle Width**	For pallets 1000x1200 crossways	A_{st}	mm	4416		4442	
	4.34.2		For pallets 800x1200 lengthways	A_{st}	mm	4655		4681	
	4.35	**Turning Radius**		W_a	mm	2620		2645	
	4.36	**Internal Turning Radius**		b_{13}	mm	877	879		
Performance Data	5.1	**Travel Speed**	With load / without load		km/h	15 / 16			
	5.2	**Lift Speed**	With load / without load		m/s	0.35 / 0.47		0.31 / 0.47	
	5.3	**Lowering Speed**	With load / without load		m/s	0.48 / 0.45			
	5.6	**Max. Drawbar Pull**	With load / without load		N	18620 / 18620			
	5.8	**Max. Gradeability**	With load / without load		%	17 / 27	16 / 26	15 / 25	
	5.9	**Acceleration Time**	With load / without load		s	4.95 / 4.90			
	5.10	**Service Brake**	Service brake			Foot / Hydraulic			
			Parking brake			Hand / Mechanical			
Electric Motor	6.1	**Traction Motor**	60 min. rating		kW	10 x 2			
	6.2	**Pump Motor**	Lift motor rating at S3 15%		kW	28			
	6.3	**Battery**	Compartment dimensions	lxwxh	mm	1007 x 1040 x 840			
	6.4	**Battery Voltage**	Nominal capacity 5h		V / Ah	80 / 930			
	6.5	**Battery Weight**	Min		kg	2160			
	6.6	**Energy Consumption according to DIN EN 16796**			kW/h	11.8			
Add. Data	10.1	**Available Working Pressure for Attachments**			bar	190	210	230	
	10.2	**Oil Volume for Attachments**			bar/lpm	155 / 28			
	10.7	**Sound Pressure Level at the Operator´s Seat**			dB(A)	70			

Note: Values listed in the specification sheet have been rounded. Performance may vary due to operation conditions and / or forklift configurations. Products and specifications are subject to change without prior notice.

Mast Chart C-B 40 X-7

Mast Type	Maximum Fork Height h_3	Mast Collapsed Height h_1	Mast Extended Height h_4		Mast Free-lift Height* h_2		Rated Load Capacities		
			With Load Backrest	Without Load Backrest	With Load Backrest	Without Load Backrest	Tilt Angle		Load Capacities
							Forward	Backward	
	mm	mm	mm	mm	mm	mm	deg	deg	kg
TL	3000	2190	4265	3880	160	160	6	9	4000
	3300	2340	4565	4180	160	160	6	9	4000
	3650	2515	4915	4530	160	160	6	9	4000
	4000	2840	5265	4880	160	160	6	9	4000
	4250	2965	5515	5130	160	160	6	9	4000
	4850	3415	6115	5730	160	160	6	5	4000
	5250	3615	6515	6130	160	160	6	5	3940
TF	3000	2170	4240	3770	970	1440	6	9	4000
TT	4000	2050	5265	4775	850	1345	6	9	4000
	4250	2140	5530	5040	940	1430	6	9	4000
	4500	2225	5790	5295	1025	1515	6	9	4000
	4700	2290	5980	5490	1090	1580	6	9	4000
	5150	2440	6430	5940	1240	1730	6	5	3940
	5600	2590	6880	6390	1390	1880	6	5	3810
	6050	2740	7330	6840	1540	2030	6	3	3670

Mast Chart C-B 45 X-7

Mast Type	Maximum Fork Height h_3	Mast Collapsed Height h_1	Mast Extended Height h_4		Mast Free-lift Height* h_2		Rated Load Capacities		
			With Load Backrest	Without Load Backrest	With Load Backrest	Without Load Backrest	Tilt Angle		Load Capacities
							Forward	Backward	
	mm	mm	mm	mm	mm	mm	deg	deg	kg
TL	3000	2185	4265	3880	160	160	6	9	4500
	3300	2335	4565	4180	160	160	6	9	4500
	3650	2510	4915	4530	160	160	6	9	4500
	4000	2835	5265	4880	160	160	6	9	4500
	4250	2960	5515	5130	160	160	6	9	4500
	4850	3410	6115	5730	160	160	6	5	4500
	5250	3610	6515	6130	160	160	6	5	4500
TF	3000	2165	4240	3770	965	1440	6	9	4500
TT	4000	2050	5265	4775	850	1345	6	9	4500
	4250	2135	5530	5040	935	1430	6	9	4500
	4500	2220	5785	5290	1020	1515	6	9	4500
	4700	2285	5980	5490	1085	1580	6	9	4500
	5150	2435	6430	5940	1235	1730	6	5	4500
	5600	2585	6880	6390	1385	1880	6	5	4350
	6050	2735	7330	6840	1535	2030	6	3	4225

Note: Mast specifications and rated capacities are based on standard chassis equipped with Super Elastic tyres.

Mast Chart C-B 50 XC-7

Mast Type	Maximum Fork Height h_3	Mast Collapsed Height h_1	Mast Extended Height h_4		Mast Free-lift Height* h_2		Rated Load Capacities		
			With Load Backrest	Without Load Backrest	With Load Backrest	Without Load Backrest	Tilt Angle		Load Capacities
							Forward	Backward	
	mm	mm	mm	mm	mm	mm	deg	deg	kg
TL	3000	2185	4415	3905	160	160	6	9	4990
	3300	2335	4715	4205	160	160	6	9	4990
	3450	2410	4715	4205	160	160	6	9	4990
	3650	2510	5065	4555	160	160	6	9	4990
	4000	2835	5415	4905	160	160	6	9	4990
	4250	2960	5665	5155	160	160	6	9	4990
	4850	3410	6265	5755	160	160	6	5	4990
TF	3000	2165	4240	3855	965	1350	6	9	4990
TT	4000	2050	5265	4870	850	1240	6	9	4990
	4250	2135	5530	5135	935	1330	6	9	4990
	4500	2220	5785	5390	1020	1415	6	9	4990
	4700	2285	5980	5585	1085	1480	6	9	4990
	5150	2435	6430	6035	1235	1630	6	5	4810
	5600	2585	6880	6485	1385	1780	6	5	4660
	6050	2735	7330	6935	1535	1930	6	3	4480
	6500	2885	7780	7385	1685	2080	6	3	4340

Mast Chart C-B 50 X-7

Mast Type	Maximum Fork Height h_3	Mast Collapsed Height h_1	Mast Extended Height h_4		Mast Free-lift Height* h_2		Rated Load Capacities		
			With Load Backrest	Without Load Backrest	With Load Backrest	Without Load Backrest	Tilt Angle		Load Capacities
							Forward	Backward	
	mm	mm	mm	mm	mm	mm	deg	deg	kg
TL	3000	2185	4415	3905	160	160	6	9	5000
	3300	2335	4715	4205	160	160	6	9	5000
	3450	2410	4865	4355	160	160	6	9	5000
	3650	2510	5065	4555	160	160	6	9	5000
	4000	2835	5415	4905	160	160	6	9	5000
	4250	2960	5665	5155	160	160	6	9	5000
	4850	3410	6265	5755	160	160	6	5	5000
TF	3000	2165	4390	3855	815	1350	6	9	5000
TT	4000	2050	5415	4870	700	1240	6	9	5000
	4250	2135	5680	5135	785	1330	6	9	5000
	4500	2220	5935	5395	870	1415	6	9	5000
	4700	2285	6130	5585	935	1480	6	9	5000
	5150	2435	6580	6035	1085	1630	6	5	4810
	5600	2585	7030	6485	1235	1780	6	5	4660
	6050	2735	7480	6935	1385	1930	6	3	4480
	6500	2885	7930	7385	1535	2080	6	3	4840

Note: Mast specifications and rated capacities are based on standard chassis equipped with Super Elastic tyres.

Standard Features

1. 80 V electrical system
2. AC motor and hydraulic systems
3. Oil-cooled disc brakes
4. Regenerative braking
5. Electronically assisted braking
6. Emergency switch
7. Manual lever controls
8. Directional control lever integrated in steer column
9. Power steering
10. Intuitive instrument panel
    - LCD screen
    - Brake oil level indicator
    - Selectable operation mode (E/S/H)
    - Turtle mode
    - Steering angle
11. Ramp hold
12. Speed reduction in turns
13. Weight indicator (hydraulic pressure sensing)
14. Low battery alarm
15. Operator Presence Sensor
16. Operator design features
    - Entry handle
    - Wide spacious floorboard
    - Adjustable steer column
    - Suspension seat, vinyl
    - Clear-view overhead guard and mast design
    - USB port in armrest
    - 12 V electrical outlet
    - Cup holder
17. Rugged steer axle with large king pins and tapered roller bearings
18. Super Elastic tyres
19. SBE battery connector
20. IP65 rated controllers
21. IP43 rated motors

Optional Equipment

1. TL,TF and TT Mast
2. Additional operator design features
    - Directional control on lift lever
    - Fingertip controls with integrated directional control switch
    - Premium suspension seat, vinyl or fabric
    - Various mirrors
    - Foot-operated directional control
    - Tilt Position Assist
3. Lights
    - LED Front worklights with turn signals
    - LED Rear lights with back-up and turn signals
    - LED Rear worklights
4. Audible warning devices
    - Back-up alarm
5. Visual warning devices
    - Flashing strobe light
6. Attachments
    - Hang-on sideshifter
    - Fork positioner with integrated sideshifter
7. Dual tyres
8. Non-marking Super Elastic tyres
9. Load backrest
10. Low overhead guard
11. Freezer conditioning
12. Battery rollers
13. Belly pan
14. Tilt cylinder bellows
15. Quick disconnect hydraulics
16. Enclosed hydraulic and drive pump motors
17. Tool kit
18. InfoLink® Ready

Warning Device Notes

Audible or visual alerts

Safety considerations and dangers associated with audible travel alarms and lights include:

- Multiple alarms and/or lights can cause confusion.
- Workers ignore the alarms and/or lights after day-in and day-out exposure.
- Operator may transfer the responsibility for “looking out” to the pedestrians.
- Annoys operators and pedestrians.

Other Options Available

Contact Crown for additional options.

Dimensions and performance data given may vary due to manufacturing tolerances. Performance is based on an average size vehicle and is affected by weight, truck condition, truck equipment and the conditions of the operating area. Crown products and specifications are subject to change without notice.

C-B 40-50 SPEC GB 06/24, 10
M03750-006-03
Printed in Germany

ISO 9001 Quality Management System certified for the design, development, manufacture, sale and product support of industrial trucks.

European Manufacturing:
Crown Gabelstapler GmbH & Co. KG

Продавец:
kupit-shtabeler.ru
+7 495 159-44-32
zakaz@kupit-shtabeler.ru