Технические данные ETV 110 / 112

JUNGHEINRICH · редакция 01/2022
Язык: EN

После этой обложки приведён заводской технический документ без изменения его страниц. Таблицы серии могут содержать несколько мачт и аккумуляторных исполнений; они не подтверждают комплектацию конкретной поставки.

Перед использованием сверьте модель, исполнение и редакцию документа с заводской табличкой и документацией вашей машины. Материал серии не является заполненным индивидуальным паспортом.

Продавец и подбор техники

kupit-shtabeler.ru
zakaz@kupit-shtabeler.ru
+7 495 159-44-32

Эта страница добавлена продавцом. Изготовитель, авторские права, заводская маркировка и техническое содержание оригинала сохранены. Контакты продавца не заменяют сведения изготовителя.

Electric reach truck
ETV 110 / 112

Lift height: 4550-7100 mm / Load capacity: 1000-1200 kg

ETV 110 / 112

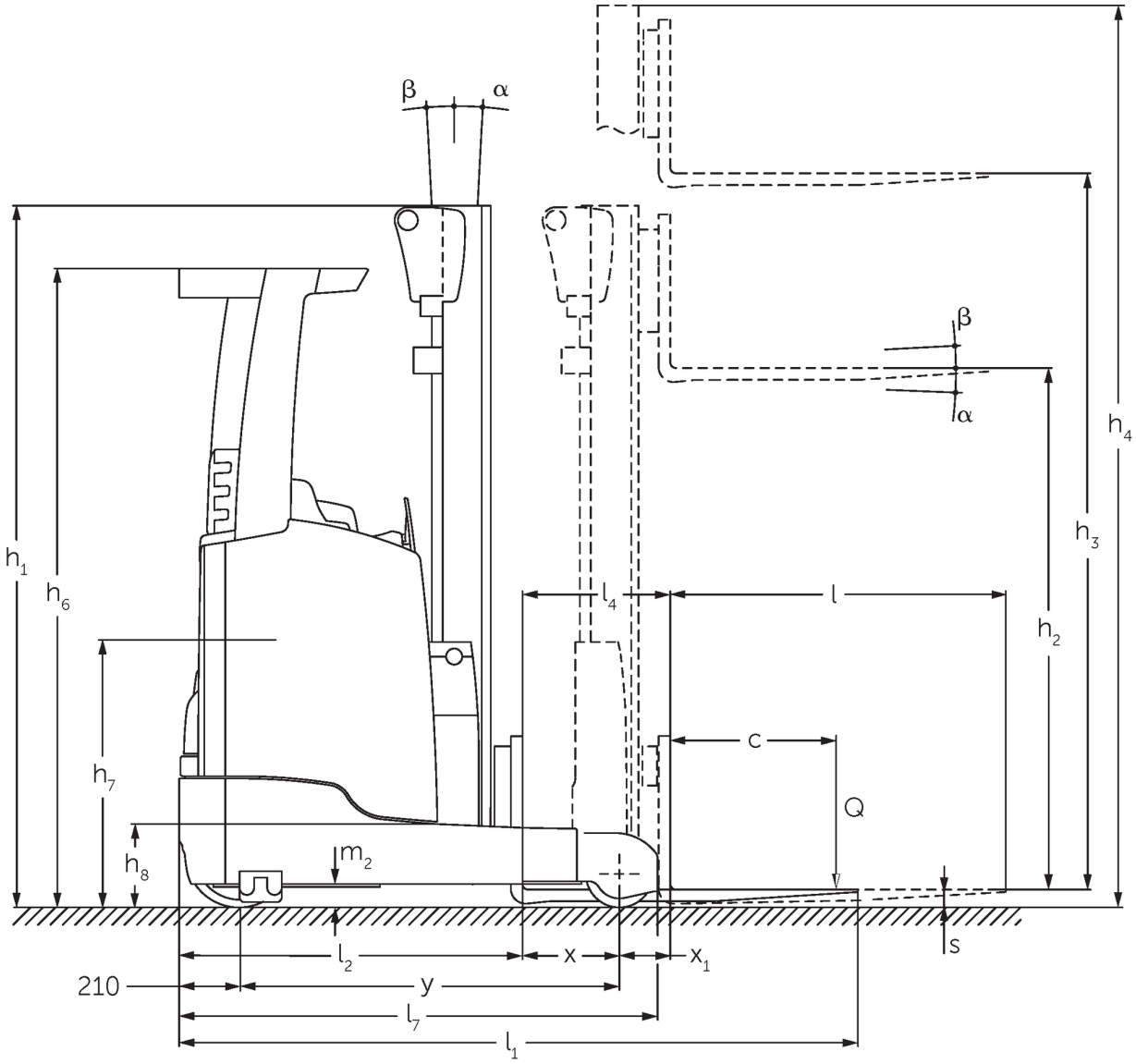
β
α
β
α
h1
h6
h7
h8
m2
h4
h3
h2
l4
l
c
Q
s
l2
x
x1
210
y
l7
l1

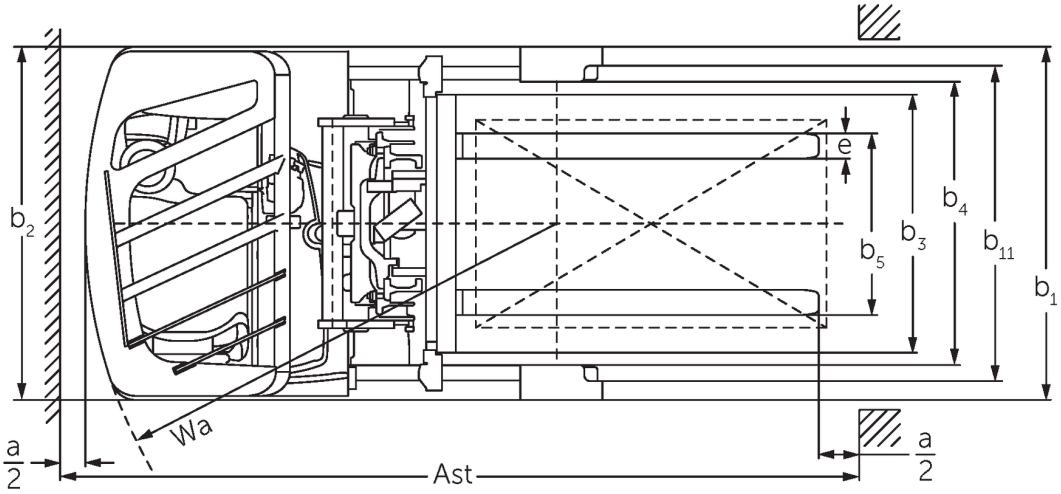
b2
e
b5
b3
b4
b11
b1
Wa
a/2
Ast
a/2

ETV 110 / 112

ETV 110 , ETV 112	Lift (h3)	Retracted mast height (h1)	Free lift (h2)	Extended mast height (h4)	Forward/backward tilt of mast
Mast tilt / Triplex mast DZ / hot-rolled	**4550 mm**	**2050 mm**	**1408 mm**	**5192 mm**	**1 / 3 °**
	5000 mm	2200 mm	1558 mm	5642 mm	1 / 3 °
	5240 mm	2280 mm	1638 mm	5882 mm	1 / 3 °
	5300 mm	2300 mm	1658 mm	5942 mm	1 / 3 °
	5600 mm	2400 mm	1758 mm	6242 mm	1 / 3 °
	5900 mm	2500 mm	1858 mm	6542 mm	1 / 3 °
	6200 mm	2600 mm	1958 mm	6842 mm	1 / 3 °
	6500 mm	2700 mm	2058 mm	7142 mm	0.5 / 2 °
	6800 mm	2800 mm	2158 mm	7442 mm	0.5 / 2 °
	7100 mm	2900 mm	2258 mm	7742 mm	0.5 / 2 °

VDI table

Stand-on: 01/2022

Characteristic	1.1	Manufacturer (abbreviated description)			Jungheinrich	
	1.2	Manufacturer's type designation			**ETV 110**	**ETV 112**
	1.3	Drive			Electric	
	1.4	Operation			Sideways-seated	
	1.5	Load capacity/load	Q	kg	1000	1200
	1.6	Load centre distance	c	mm	600	
	1.8	Load distance, centre of drive axle to fork	x	mm	339	424
	1.8.1	Load distance, centre of drive axle to fork, mast extended		mm	170	
	1.9	Wheelbase	y	mm	1300	1385
Weights	2.1.1	Service weight (incl. battery)		kg	2560	2580
	2.3	Axle load unladen front/rear		kg	1587 / 973	1587 / 993
	2.4	Axle load fork forward laden front/rear		kg	634 / 2926	516 / 3264
	2.5	Axle load fork back laden front/rear		kg	1282 / 2278	1361 / 2419
Wheels/suspension system	3.1	Tyres			Polyurethane (PU)	
	3.2	Tyre size, front			Ø 343 x 114	
	3.3	Tyre size, rear			Ø 230 x 85	
	3.5	Wheels, number front/back (x=driven)			1x / 2	
	3.7	Tread width, rear	b_{11}	mm	993	
Basic dimensions	4.2	Retracted mast height (h1)	h_1	mm	2300	
	4.3	Free lift (h2)	h_2	mm	1658	
	4.4	Lift (h3)	h_3	mm	5300	
	4.5	Extended mast height (h4)	h_4	mm	5942	
	4.7	Height of overhead guard (cab)	h_6	mm	2190	
	4.8	Seat height/stand height	h_7	mm	1057	
	4.10	Height of support arms	h_8	mm	265	
	4.19	Overall length	l_1	mm	2321	
	4.19.4	Length including fork length	l_1	mm	2324	
	4.20	Length including fork shank	l_2	mm	1174	
	4.21.1	Overall width	b_1	mm	1120	
	4.21.2	Overall width	b_2	mm	1120	
	4.22	Fork dimensions	s/e/l	mm	40 x 80 x 1150	
	4.23	Fork carriage connection class			2B	
	4.24	Fork carriage width	b_3	mm	800	
	4.25	Width across forks	b_5	mm	296	
	4.25.1	Width across forks (min./max.)	b_5	mm	296 / 677	
	4.26	Width between support arms/loading areas	b_4	mm	900	
	4.28	Reach distance		mm	509	594
	4.32	Ground clearance centre of wheelbase	m_2	mm	80	
	4.34	Aisle width (pallet 1000×1200 sideways)	Ast	mm	2608	2627
	4.34.1	Aisle width (pallet 800x1200 length)	Ast	mm	2664	2668
	4.35	Turning radius	W_a	mm	1515	1595
	4.37	Length over the support arms	L_7	mm	1640	1725
Performance data	5.1	Travel speed laden/unladen		km/h	11 / 11	
	5.2	Lift speed laden/unladen		m/s	0.48 / 0.7	0.43 / 0.7
	5.3	Lowering speed laden/unladen		m/s	0.5 / 0.5	
	5.4	Reach speed laden/unladen		m/s	0.2 / 0.2	
	5.7	Gradeability laden/unladen		%	7 / 10	

	5.8	Max. gradeability laden/unladen	%	10 / 15	
	5.9	Acceleration time laden/unladen	s	4.8 / 4.3	4.9 / 4.5
	5.10	Service brake		electric	
E-motor/Electronics	6.1	Drive motor, performance S2 60 min	kW	6	
	6.2	Lift motor, performance with S3	kW	13.3	
	6.3	Battery according to DIN 43531/35/36		DIN 43531 B	
	6.4	Battery voltage/nominal capacity	V / Ah	48 / 280	
	6.5	Battery weight	kg	556	
	6.6.1	Energy consumption according to EN cycle	kWh/h	2.81	3.05
	6.6.2	CO2 equivalent as per EN 16796	kg/h	1.5	1.7
	6.7	Throughput	t/h	38.63	46.65
	6.8.1	Energy consumption with max. throughput	kWh/h	2.89	3.06
Other	8.1	Type of drive control		Impulse / Mosfet AC	
	10.1	Operating pressure for attachment	bar	150	
	10.2	Oil flow for attachments	l/min	20	
	10.7	Sound level as per EN12053, operator's ear	dB (A)	68	

- This data sheet according to VDI guideline 2198 only states the technical values of the standard truck. Different tyres, other masts, additional equipment etc. may result in different values.

- VDI no. 1.8: the battery size influences the load distance, centre of drive axle to fork x
- VDI no. 2.1.1: the battery size and the mast version influence the service weight and the axle loads
- VDI no. 2.3: the battery size and the mast version influence the service weight and the axle loads
- VDI no. 2.4: the battery size and the mast version influence the service weight and the axle loads
- VDI no. 2.5: the battery size and the mast version influence the service weight and the axle loads
- VDI no. 4.1: the mast version determines the tilt values
- VDI no. 4.10: the height of the support arms is enlarged by 30 mm with a load support arm cover
- VDI no. 4.19: the battery size and the fork length influence the overall length l1
- VDI no. 4.20: the battery size influences the length including fork shank l2
- VDI no. 4.28: the battery size influences the reach distance l4
- VDI no. 4.34.1: the battery size influences the aisle widths
- VDI no. 4.34.2: the battery size influences the aisle widths

The German production facilities in Norderstedt, Moosburg and Landsberg are certified.

ISO 9001
ISO 14001

Jungheinrich fork lift trucks meet European safety requirements.

CE

JUNGHEINRICH