FORKLIFT / kupit-shtabeler.ru

Архивное руководство по эксплуатации и обслуживанию HANGCHA J Series

Редакция оригинала: Декабрь 2010, 5-я редакция
Язык: английский
Исходный файл: 78 стр.

Эксплуатация и обслуживание четырёхопорных противовесных электропогрузчиков исторической J Series. Применимость к CPD10/15/20/25/30J рассматривается для исполнений C1 и C2, без выбора конкретной батареи, контроллера или мачты.

Важно: на стр. 63 исходного файла таблица CPD20JC2 содержит конфликт грузоподъёмности с другими данными руководства. Не используйте эту колонку как подтверждение нагрузки конкретной машины. Ширину, батарею и параметры мачты также сверяют по её заводской табличке и комплектации.

Далее сохранён весь полученный исходный файл без изменения технических страниц, предупреждений и сведений изготовителя. Эта обложка добавлена продавцом и не является документом HANGCHA. Дата редакции не означает год выпуска или поставки предлагаемой машины.

Продавец и подбор техники

kupit-shtabeler.ru
zakaz@kupit-shtabeler.ru
+7 495 159-44-32

Справочный материал серии не заменяет заполненный индивидуальный паспорт, серийную табличку или документы конкретной поставки. Пустые формы и образцы в оригинале не удостоверяют предлагаемую единицу.

CPD10/15/18/20/25/30J
CPD10/15/18/20/25/30J D1
CPD10/15/18/20/25/30/35J C1
CPD10/15/18/20/25/30/35J C2
CPD40/45/50J D1
CPD40/45/50J C2

1～5t　J Series Counterbalanced Battery Forklift Truck

OPERATION AND MAINTENANCE MANUAL

Original Instruction

HANGCHA GROUP CO., LTD.

Dec. 2010 5th edition

FOREWORD

Thanks for you purchasing our J series battery forklift truck.

Four wheel counterbalanced battery forklift truck is our company's new product. It has the character of small turning radius, beautiful shape, small dimensions, low gravity, good stability, superior performance.

This operation manual is the explanations that how to use 1-5tJ series forklift truck correctly. It will instruct you how to operate safety and precautionary maintenance. To ensure safety and exert the truck's potential, all the personnel that in charge of operation, maintenance and management must read this manual thoroughly before starting work with the forklift.

As the improvements of products of our company, maybe there are some differs between this operation manual with your forklift truck.

If you have any questions please keep touches with HANGCHA GROUP CO., LTD. sales department or let the agents know.

Truck model	Tow electric control	Rise electric control	Rated capacity（t）/ load centre distance（mm）
CPD10/15/18/20/25/30J	1244(CURTIS)	EVC255(CURTIS)	1.0/500, 1.5/500, 1.8/500, 2.0/500, 2.5/500,3/500
CPD10/15/18/20/25/30J D1	ACS(Danaher)	ACS((Danaher)	
CPD10/15/18/20/25/30/35J C1	1238(CURTIS)	EVC255(CURTIS)	1.0/500, 1.5/500, 1.8/500, 2.0/500, 2.5/500,3/500,3.5/300
CPD10/15/18/20/25/30/35J C2	1238(CURTIS)	1236(CURTIS)	1.0/500, 1.5/500, 1.8/500, 2.0/500, 2.5/500,3/500,3.5/300
CPD40/45/50J D1	ACS(Danaher)	ACS(Danaher)	4.0/500, 4.5/500, 5.0/500
CPD40/45/50J C2	1238(CURTIS)	1238(CURTIS)	4.0/500,4.5/500,5.0/500

©Dec. 2010 5th edition HANGCHA GROUP CO., LTD.

CONTENT

Foreword
1. Name of main parts or component 1
2.Instrument and Controls 2
Meter Panel 3
Controls 8
3.Body and Others 10
4.Safety instructions 12
5.The structure and stability of truck 17
6.Running-in of the new truck 20
7.Daily maintenance 21
8.Driving and operation 25
Driving 25
Traveling 25
Turning 25
Stopping or parking 26
Loading 26
Stacking load 27
Un-stacking load 27
Check after operation 28
9.Deposit 29
10.Storage battery 30
The Automatic Watering System of the Forklift Battery 38
11.Maintenance summarization 42
Preventive maintenance schedule 43
Replace the key safe parts termly 49
Table for bolt's tight torque 50
Table for oil used in the truck 50
12.Truck's convey, lifting, towing 51
13.Parameters 52
14.Scutcheon 61
15.The use, assembly and safe rules of attachment 66
16.Related safety instruction and standard 68
17.Maintenance record 70

1. Name of main parts or component

1. Fork	2. Fork carriage	3. Mast	4.Lifting cylinder
5. Overhead guard	6.Steering wheel	7. Seat	8. Counterbalance
9. Rear wheel	10. Chassis	11. Left and Right battery cover hood	12. Front wheel

2.Instrument and Controls

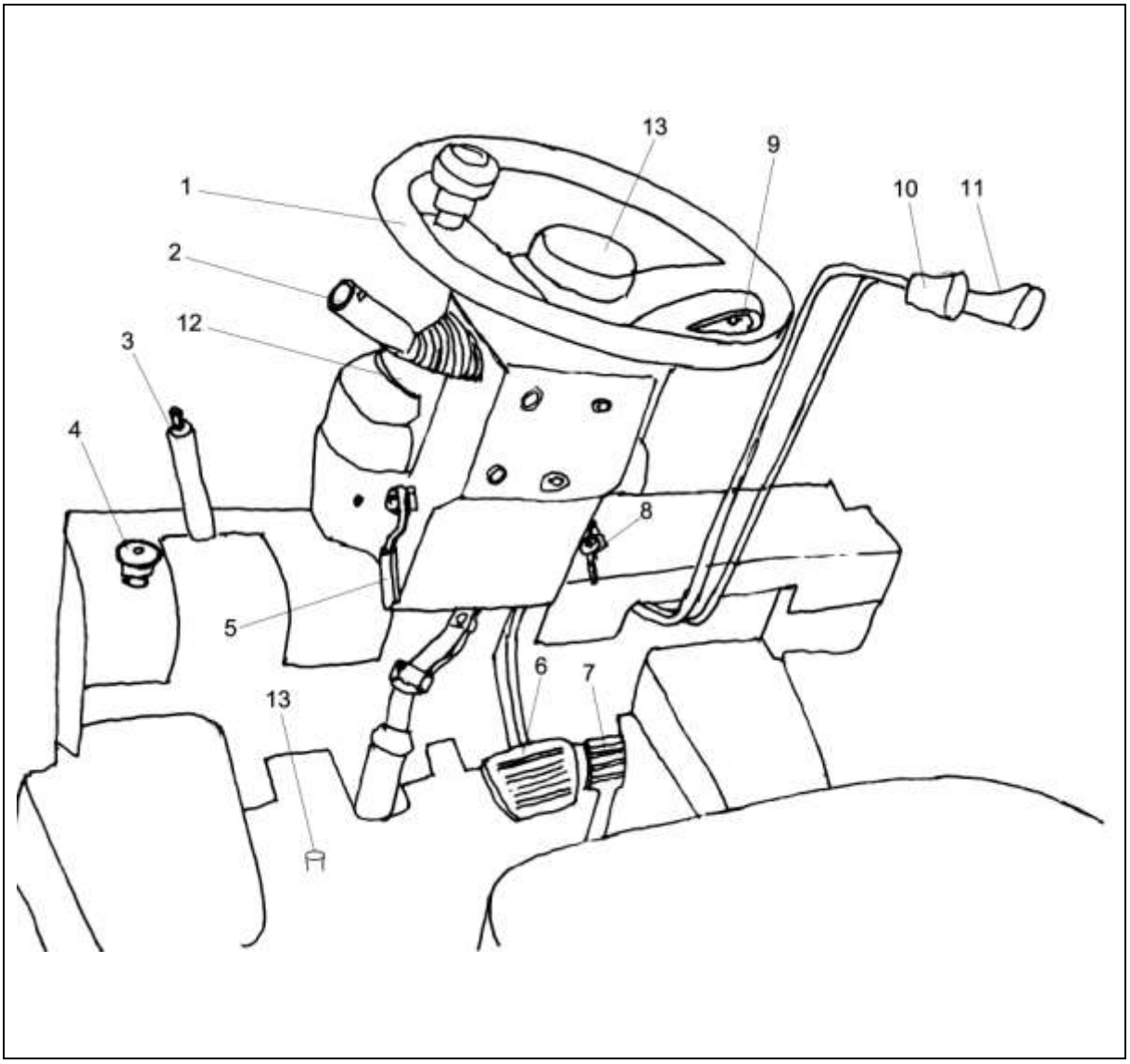

1. Steering wheel	2. Direction switches	3. Parking brake lever	4.Emergency disconnect switch
5. Adjusting lever	6. Brake pedal	7. Accelerator	8. Key switch
9.Turning signal switch	10. Lifting lever	11. Tilting lever	12. Meter panel
13. Horn button			

Meter Panel

CPD10/15/18/20/25/30/35JC1
CPD10/15/18/20/25/30/35JC2

CPD10/15/18/20/25/30J

CPD40/45/50J C2

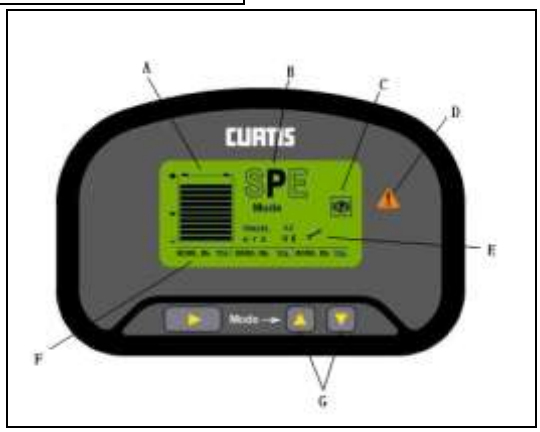

A、Battery warning

As the following diagram shows, from the left to the right, the battery decreases from full state to the only one case, which represents that the battery leaves only 20%. Thus the whole battery indicator bar will twinkle, and the state indicator lamp will be bright, now please stop working and charge immediately.

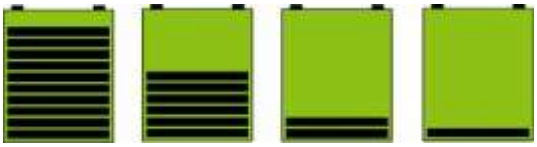

Notice：Charging in time is very important, otherwise it will affect the lift-span of battery！

B、Mode indication

As the diagram shows, the pictures from the left to the right represent the mode of S, P, E, SPE respectively；

Mode S is super mode, thus the truck's acceleration, deceleration rate, max climbing gradient and so on is much higher. It is applied for transporting mass of good in short time and climbing big gradient slop，but it costs more energy，so the mode will not be used in normal state except emergency.

Mode P is power mode. All kinds of index are lower than that of super mode. It is applied for the case of long distance transporting and needing higher power or speed.

Mode E is economical mode. All the parameters are optimized. Working in this mode can save power so it is applied for a long time work after charging, and it is suggested to work in this mode in normal work-time.

Mode SPE is safe mode. Thus the max vehicle speed is limited to about 7km/h. It is applied for working in busy storage and cabined room.

Notice: the default mode is mode E. after power cutting every time, the work mode resets to mode E no matter which mode it is before power cutting, but the switch key is still in the mode before turn off.

The mode can be switched through the mode switch button (G) among the mode of S, P, E, SPE, as the above diagram shows.

C、Parking brake indicator lamp

When using the parking brake, the lamp will be bright.

D、State indicator lamp

When there is something wrong with the electrical controller, or operate improperly, the battery is in lower power, the lamp will be bright and twinkles.

E、Error code display area

Display the error code of electrical controller.

Notice： “TRAVEL” is the error code of tow electrical controller, “HYD” is the error code of pump controller. “TRAVEL OK” means it works without error。

Notice： the error code of tow electrical controller refers to the appendix.

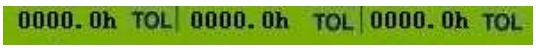

F、Work-time accumulate timer

When the truck key switch turns on, the left hour timer will start to time. The minimal resolution is 10% of an hour, the other two hour timers are not used.

CPD10/15/20/25/30/35J D1
CPD40/45/50J D1

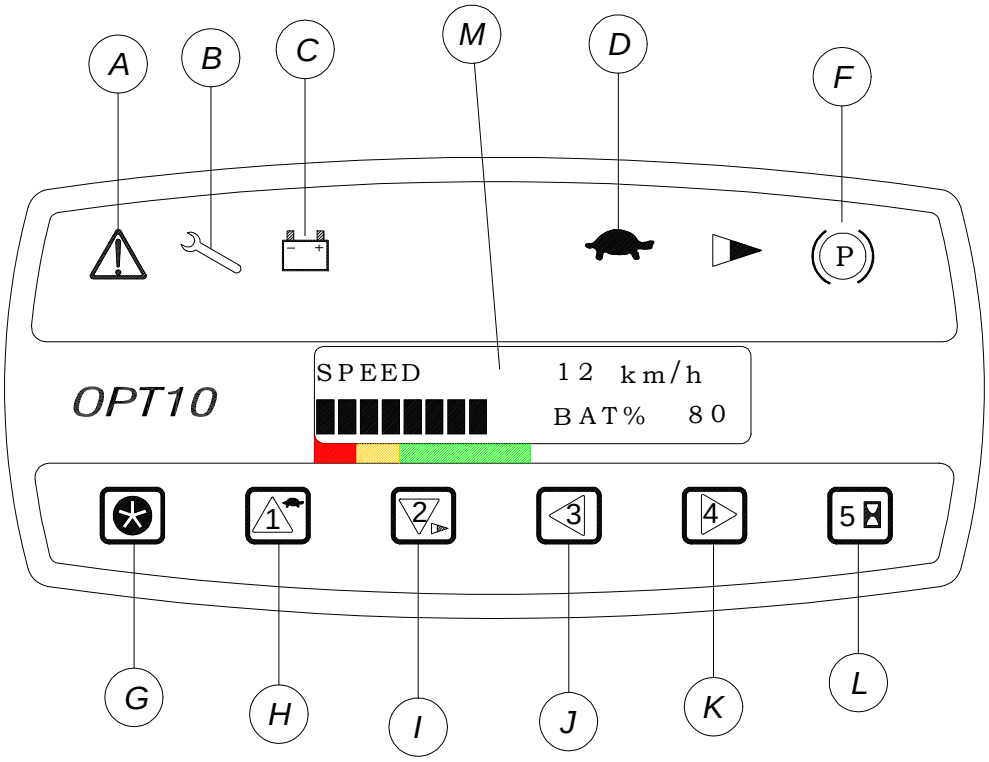

The meanings of 6 indicators:

Communicate indicator (A)

Only lights on when record program, usually it is no use.

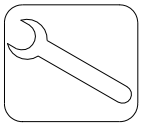

Error indicator (B)

When operation is wrong or the truck is in trouble, error code will display on the dashboard. The error indicator lights on.

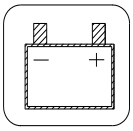

Low battery warning (C)

When battery quantity is lower than 20% of maximum capacity, the indicator lights are on, at the same time, buzzer beep. When LED shows no power, please charge battery as quick as possible.

Speed limited indicator (D)

When this lamp lights, it meanings the truck working at low speed mode. The maximum speed of truck decreased. Press button 1, you can switch the high speed and low speed mode.

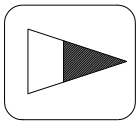

Accelerate indicator (E)

When this lamp lights on, it means the truck working at low acceleration mode. The maximum acceleration decreased. Press button 2, you can switch the high acceleration and low acceleration mode.

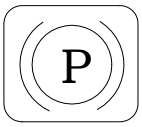

Parking brake indicator (F)

When pulling on the parking brake lever, this lamp lights on.

Entrance button (G)

This button is no use for operator.

Speed limited button (H)

Press this button to switch the high speed and low speed.

Accelerator limited button (I)

Press this button to switch the high acceleration and low acceleration.

Backup button (J)

This button is no use for operator.

Backup button (K)

This button is no use for operator

Switch button of hour indication（L）

Push this button, it will display the total hours of truck, as follow figure:

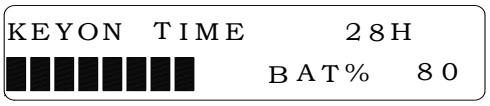

Push again, it switch to the total traction hour.

Push the button once again, it switch to speed display mode.

Dashboard display LED (M)

When turn on the key switch, the system will self-diagnose, the lamp will lights on one by one. After self-diagnose, LED will display truck speed and battery capacity. You can know your truck's working condition through the LED dashboard.

Key switch

The key switch has two "on/ off" position, you should push the Direction switch lever to neutral and loose the accelerator pedal, then turning the key switch to "on" position clockwise.

Caution!
1. Turning the key switch “on” does not make the forklift truck move, if the Direction switch lever is not in the neutral position or the accelerator pedal is pushing.
2. Error code maybe appear, don’t worry about it.
3. The Direction switch lever should be returned to neutral and move you foot from the accelerator pedal. Then the truck can be operated.
4. Then the error code should be disappeared.

Horn button [13]

Press the rubber cover at the center of steering wheel to sound horn. The horn sounds even when the key switch is in the “off” position.

Combined light switch [9]

This combined light switch is composed of turning light switch and big/small lamp switch. Turning light indicates the traveling direction. When turn on the switch, the lamp flashes.

Forward	Left turning lamp flashes
Neutral	Lamp goes off
Backward	Right turning lamp flashes

Caution!
The turn signal lever does not automatically return to the neutral position. Reset it by your hand.

Big/small lamp switch has two shifts. First shift small lamp lights on; second shift big and small lamp both light up.

Emergency disconnect switch [4]

When happen emergency, presses down the emergency disconnect switch, and then the main power of the truck will be cut off, the truck stops working.

Caution!
Please don’t use the emergency disconnect switch to substitute the function of key switch.

Rear big lamp switch (optional)

Rear big lamp switch (push\pull) has only one shift.

Connector / Position	battery	Far light
0	×	
1	×	×

× Means connected

Caution!
This light does not relate to key switch position, so please don’t forget to turn off the rear big lamp when you leave the truck.

Fuse box

J\JC1\JC2 Series

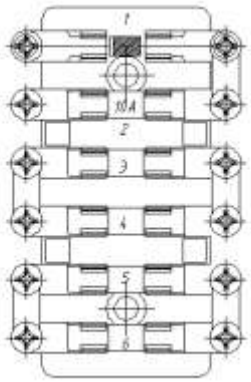

1st is a diode preventing from connecting in reverse.
2nd is a control circuit fuse (10A).
3rd and 4th are fuses for light and horn circuit. (10A respectively)
5th is light fuse 10A.
6th is spare fuse 10A.

JD1 系列

1st is control circuit10A.
2nd is main contact circuit fuse 10A.
3rd is instrument fuse 10A.
4th and 5th is light fuse 10A.
6th is spare fuse 10A.

Caution!
When replace a new fuse, please choose the same capacity fuse of the old one.

Controls

Steering wheel [1]

The steering hand-wheel is operated in the conventional manner, that is, when the wheel is turn right, the truck will turn to the right; when the wheel is turn left, the truck will turn to the left. The steer wheels are located at the rear of the truck. These cause the rear of the truck to swing out when a turn is made.

Warning!
This truck is provided with the power steering, so heavy hand-wheel operation is caused when the steering motor comes to a stall. To put the power steering in operation again, restart the steering motor without delay.

Parking brake lever [3]

Use this parking brake lever to park the lift truck. And the parking brakes are applied on the front two wheels by pulling up on this lever. To release the parking brakes, move the lever forwards.

There is a micro switch at the left side of the parking brake lever, tense the lever makes running invalid.

For the truck of CE: if you leave the seat without tensing the lever, it will warn and remind you to tense the lever.

Warning!
If parking on a grade is unavoidable, be sure to block the wheel.

Forward-reverse lever [2]

The forward-reverse lever is used for switching between forward and backward moves. When the lever is pushed forward and accelerator pedal pressed, the forklift trucks moved forward. When the lever is pushed backward, the forklift trucks moved backward.

Caution!
While traveling, if change the Forward- Reverse lever, electric braking will operate，speed will lower until stop，then travel to the opposite direction.

Warning!
Turning the key switch “on” does not make the forklift truck move, if the Forward-Reverse lever is not in the neutral position or the accelerator pedal is being pressed. In this case, the Forward-Reverse lever should be returned to neutral and move you foot from the accelerator pedal. Then the truck can be operated.

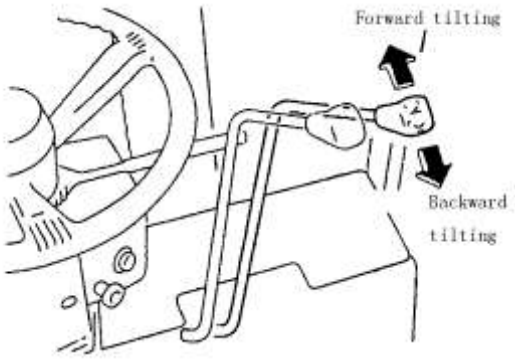

Lifting lever [10]

The forks can be raised or fell by pulling backwards or pushing the lever. Lifting speed can be controlled by tilt backwards angle of lever and the lowering speed can be controlled by tilt forwards angle of the lever.

Tilting lever [11]

The mast can be tilted by operation of this tilt lever. Pulling on this lever backwards will tilt the mast backwards, and pushing it forwards will tilt the mast forwards. The tilt speed can be controlled by tilt angle of the lever.

Caution!
The tilt lock mechanism built in the hydraulic control valve does not allow the mast to tilt forwards while the electricity is being shut down even if the tilt lever is pushed forwards.

Pedals

Brake pedal [6]

Press this pedal to slow or stop the truck. At the same time, the brake light comes on.

Caution!
No permitted to press the brake pedal and the accelerator pedal at same time, otherwise, it is harmful to the traveling motor.

Accelerator pedal [7]

As the accelerator pedal is slowly pressed, the drive motor start turning and the forklift truck will start to move. According to the force applied to the pedal, the speed is adjusted with not steps.

Warning!
Before open the key switch to press the accelerator pedal, the more function digital indicator shall show alarm information. Then you must release the accelerator pedal.

Caution!
Loosen the accelerator pedal when truck is working, truck can make soft brake

3.Body and Others

Seat

Adjust operator' seat to the position where is comfortable for you and provides easy controls. Before proceeding with work, adjust operator's seat and make sure that it is securely locked. Adjust the operator' weight through rock- suspends system level. The rear of the seat is adjustable.

Seat switch (only for trucks exporting to Europe or option)

For the safe of truck, when you leave the seat longer than 5 seconds, the truck will stop traveling.

Safety belt

Please keep back and waist close to seat as far as possible, and fix safety belt at the same time.

Inspect whether bolts fixed belt are loose or not. Do not use belt with a knot. Do not make belt press on stiff or fragile things, and do not make belt attrite with sharp things to avoid wearing. Do not make seat backrest too be tilted; otherwise safety belt may not extend correctly.

Do not remove any part of belt at will. Please often inspect the belt used frequently, if found any abnormal, replace it at once. And the life for use is 3-5 years, scrap it ahead of schedule if found any abnormal.

There is a safety belt on the seat, before you operate the forklift truck, please fasten the seat belt to protect yourself.

Overhead safe guard

The overhead guard used is strong enough to meet safety standard, and protects the operator from falling materials. The top gap is used to lift the batteries. It is forbidden for use a truck that does not with safeguard.

Hood

The hood can be swung up fully to provide easy examining and maintenance of the storage batteries.

You can lift up the hood with little effort with an aid of hood damper. To lock the hood, push down on the front of hood until it covered.

Caution!

Be careful do not to catch you fingers in the hood when closing it.

Depress the spring insurance before you close the hood, then press the head of the hood.

Left & Right battery cover hood

The battery is covered hood, one left and one right. When you want to take off the hood, you should take off the knob at first.

Fork stopper

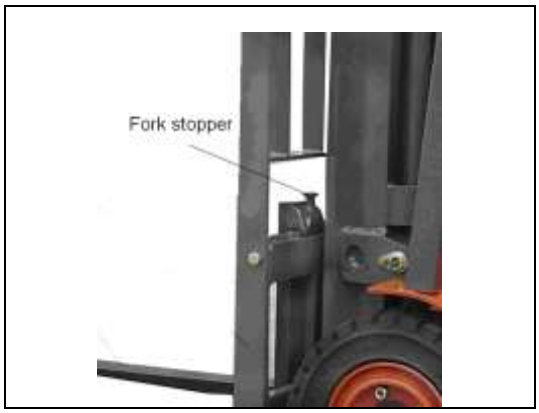

Fork stoppers are locked the forks in position. To adjust fork spacing, pull up fork stoppers, turn 90°and shift the forks to the desired position. The fork spacing should be adjusting according to loads to be handled.

Warning!

The forks should be set symmetrically to machine centerline and fork stoppers should always be locked again.

There are one gap on the below beam. It is used to attach goods.

It is forbidden to lock the fork on the gap position, to prevent the fork fall off from the gap.

In the middle of the above beam, a bolt used to prevent fork works here. Please change the bolt as soon as it is damaged.

Change fork

Take down the old fork: Firstly, locate the fork to the middle, decline it to the ground and make the mast forward, then operate the truck traveling backward, the fork will be taken down.

Change new fork: Firstly, make the fork dead against the truck and forklift's mast to the bottom, then operate the truck traveling forward, aim at the two gaps and beams, and raise the mast. Adjust the position of the fork.

Safety step and safety grip

The safely steps are provided on both side of the truck body. The safely grip is provided on the front left pillar of the overhead guard. Use the safely step and safely grip when mounting and dismounting the truck.

Brake fluid reservoir cup

The brake fluid reservoir cup is located at the meter board.

Caution!

The brake fluid is poisonous, be careful do not drop down. When add brake fluid, be careful do not let dirt and other thing drop into reservoir cup.

Head lights and combination lights

Two headlights and combination lights (turn signal, show width lamp) are installed at the front side of the truck. Take care of the lights, and wipe dirt, if any, and replace any damaged light immediately.

Rear combination lights

The combination lights at the rear side serve as turn signal, show width lamp, brake lamp, and back-up lamp. Pay attention to keep them from being damaged or covered with dust, if any, clean or replace immediately.

Steering column tilting angle adjuster

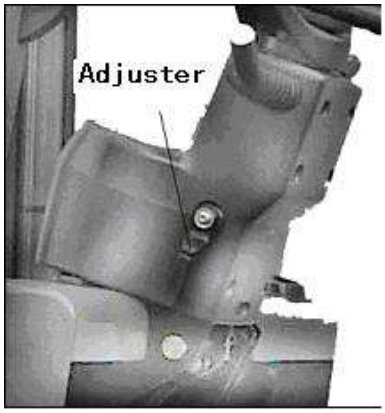

The tilting angle of the steering column is adjustable to suit individual operators. Turn the hand lever upward to release the steering column and locked by turning it downward.

Hydraulic oil reservoir cap

The hydraulic oil reservoir cap is located at the right rear end, below the battery hood; open the right side battery hood when adding oil. After fill in clean hydraulic fluid, tighten lock the cap.

Air leakage plug

There is an air leakage plug on the oil tank to let air in the tank goes out. You'd better often check the plug and see whether been jammed.

Chair disconnecting switch

When the operator leaves seat, this switch cut off, and the power of truck is cut off.

Safety seat belt (for the trucks exporting to Europe or option)

There is a safety belt on the seat, before you operate the forklift truck, please fasten the seat belt to protect yourself.

Rear big lamp (for the trucks exporting to Europe or option)

The rear big lamp is set on the safeguard. If it is broken, please replace a new one at once.

4.Safety instructions

1. Only trained and authorized operator shall be permitted to operate the truck.

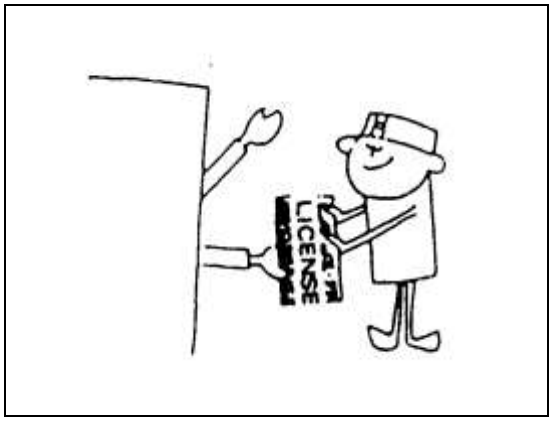

2. Inspect the truck at periodic intervals for oil or water leak, deformation, lousiness, etc. If neglected, short life of components will be caused and in the worst case a fatal accident would occur.

make sure having replaced good parts during periodic check.

Wipe off oil, grease or water from the floor board and foot and hand controls, if any.

Strictly prohibit smoking and spark nearby the storage battery when checking it.

· If maintenance on high position, such as mast, front and rear lamp, please be careful to prevent fall down or be clamped.

Be careful do not be scalded when inspect the motor, controller and etc.

3 whatsoever in trouble, you must stop the forklift, hang a mark of “danger” or “trouble” and take off the key, at the same time inform the manager. Only after the trouble is removed, you may use the forklift.

If trouble occurs when lifting cargo, to Climb or descend, or the storage battery electrolyte, the hydraulic fluid, the brake fluid has the revelation, please organizes the personnel to repair immediately.

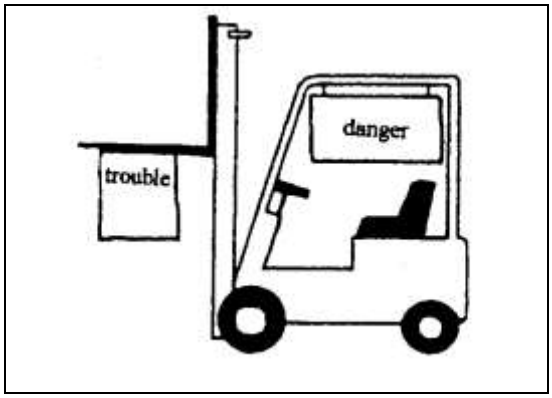

4. Operator must wear helmet, safety shoes and work clothes.

5. Because there will bring exploding gas in the bosom of the battery, prohibit any flame nearby it absolutely.

Do not let any tools close the two terminal of the battery to avoid spark or short circuit.

6. The movement road of forklift should be solid and smooth coagulation road or similar to the road suitable for vehicle. Recheck the state of working ground.

The considered climatic conditions when the forklift designs are: Temperature - 20℃-50℃; the wind speed does not surpass 5m/s; the air relative humidity is not bigger than 90% (temperature 20℃). The forklift is not suitable in the flammable explosive working conditions.

7. Never mount or dismount the moving truck. Use the safety step(s) and safety grip facing the truck when mounting or dismounting the truck.

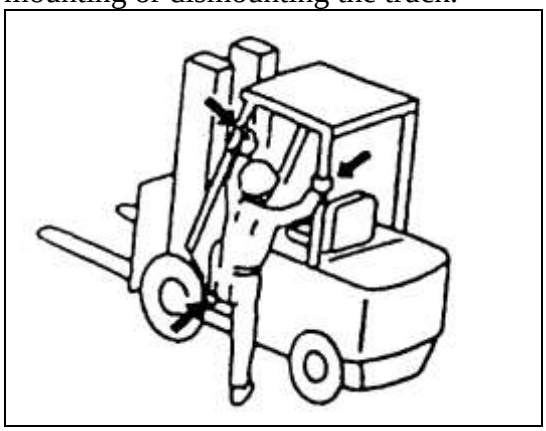

8. Never attempt to work the controls unless properly seated.

Before starting, adjust the seat so you can get easy access to all hand and foot control.

9. Before starting up, make sure that:

Please fasten seat bolts.

The parking brake lever is applied securely.

The forward-reverse lever is in neutral.

Before staring, make sure no one is under, on and close to the truck.

·Don't step the accelerate pedal or control the lifting lever or tilting lever before turning on power.

10. Operate the controls smoothly. Avoid sudden stops or turns.

· It is dangerous to make a sharp brake. Otherwise the truck has the possibility of overturn.

11. Pay attention to the route of the truck; be sure to make a wide sight.

12. Never allow other person(s) to ride on the forks, pallets or on the truck.

13. Taking account of the shape and material of loads to be handled, use a proper attachment and tools.

Avoid hoisting the load, with wire rope hung on the forks or attachment, since the wire rope may slide off. If needed, a qualified personnel for slinging operation should perform, making use of a hook or crane arm attachment.

Take care not to protrude the forks out of the load. The protruded fork tips may damage or turn over the adjacent load.

14. Know the rated capacity of your lift truck and its attachment, if any, and never exceed it.

Do not use a man as an additional counterweight. It's quite dangerous.

15. Keep your mind on your work.

16. Keep your head, hands, arms, feet and legs within the confines of the operator's compartment. Never stretch out for any reason.

17. The pallet and skid used should be strong enough to endure the load. Never use damaged or deformed ones.

18. We afford all type of attachment, such as rotating roll clamp, bale clamp, side shifter, and crane jib etc. You should refit the truck under ours license if you want. It is forbidden to refit it by yourself.

19. Safeguard protect you do not be hurt by the goods fallen. Load bracket protect you load goods smoothly. It is forbidden to use truck without safeguard or load bracket.

20. It is forbidden to walk down the fork or the attachment.

It is forbidden to walk up the fork or stand on the fork.

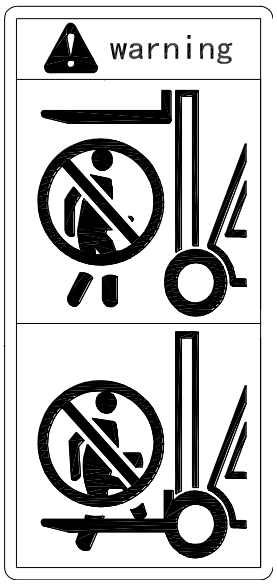

21. It is forbidden to put your hands, arms or head stretch between the mast and safeguard. Once clamped, the life has danger.

It is forbidden to put your hands in inner and outer mast.

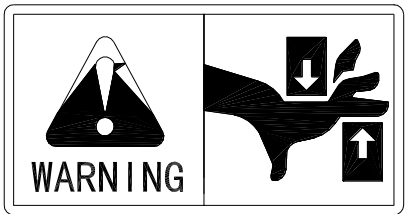

22. The goods is liable to drop turning or passing rough road when it departures the center. And the forklift may turn over more probably.

23. Don't stack loads on forks in such a way that the top of loads exceeds the load backrest height. If unavoidable, make sure the load is fastened. When handling bulky loads that restrict your vision operate the truck in reverse or have a guide. When lead by a guide, make sure you understand hand, flag, whistle or other signals. When handling long loads such as pipe, lumber etc or in the case of the Large-sized model, or operate with long attachment, be extremely careful of load end swing at corners or in narrow aisles. Be alert for others.

24. Use minimum forward and reverse tilt when stacking and un-stacking loads. Never tilt forward unless load is over stack or at low lift height.

· When stacking loads on a high place, once make the mast vertical at a height of 15 to 20 cm above the ground and then lift the load farther. Never attempt to tilt the mast beyond vertical when the load is raised high.

To un-stack loads from a high place, insert forks into the pallet and drive backwards, then lower the load. Tilt the mast backwards after lowering. Never attempt to tilt the mast with the load raised high.

25. It is dangerous to travel with forks higher than appropriate position regardless of whether loaded or not. Keep the good traveling posture. (When traveling, the forks should be 15 to 30 cm above the ground or floor and the mast tilted backward)

Do not operate the side shift mechanism, if equipped, when the forks are raised and loaded, since this will cause the truck to be unbalanced.

26. Watch for branches, cables, doorways, or overhangs. Pay caution when working in congested areas.

Slow down and sound horn at cross aisles and other locations where vision is restricted.

When make a turn, be sure the speed of the truck is lower than the 1/3 max. of allowable speed.

27. Affirm keeping some distance from roadside and flat roof.

28. Before driving over a dock-board or bridge-plate, be sure that it is properly secured and strong enough to sustain the weigh.

29. When operating loaded truck, have the rear end of your machine pointed downhill.

When operating unloaded truck, have the rear end of your machine pointed upgrade.

Do not make a turn on the grade, in order to avoid overturn.

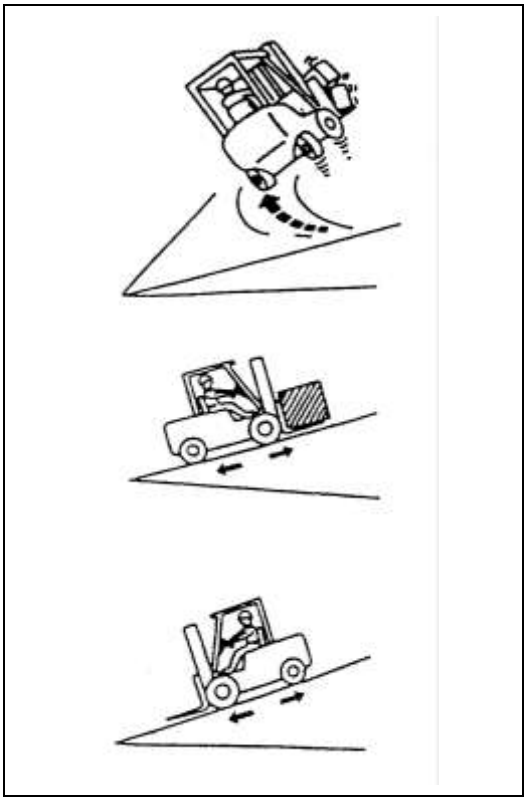

30.the goods is liable to drop turning or passing rough road when it departures the center. And the forklift may turn over more probably.

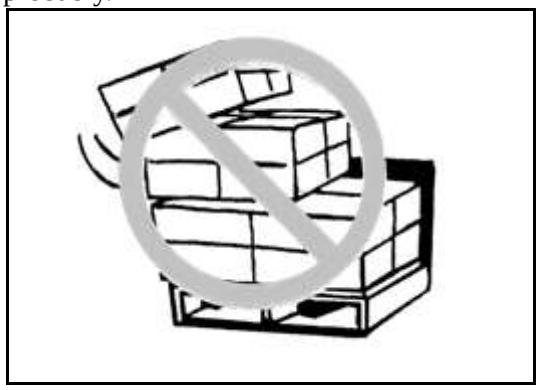

31. Never lift loads with the truck inclined. Avoid loading work on a grade.

32. Never permit anyone to stand or walk under upraised forks or other attachments if machine is so equipped. If unavoidable, use a safety stand or block to prevent a possibility of fork attachments falling down or moving unexpectedly.

33. Inspect the surface over which you will run. Look for holes, drop-offs, obstacles, and look for rough spots. Look for anything that might cause you to lose control, bog down or upset.

Clear away trash and debris. Pick up anything that might puncture a tire or let the load lose balance.

Slow down for wet and slippery roads. Stay away from the edge of the road. If unavoidable, pay more attention.

Do not operate the truck when the weather is execrable, such as windy, thunder storm, snow and etc. Especially when wind speed is higher than 5m/s, don’t operate the truck outside.

34. An accumulator is required for controller. Forbid to touch within B+ and B- to prevent from wounding by electricity. Before checking or cleaning, please connect loads (contactor circuit or horn for example) between B+ and B- first to discharge for capacitor of controller.

35. Pulling the hand brake when parking on flat. If necessarily parking on ramp, you should place the wedges under wheels.

Descending the fork to the ground and keeping a little forward tilting, shut off key switch and take off key.

Pull out the battery plug.

The parking place must be far away from fireworks.

36. You can tow the forklift to the safe place with towing pin when the forklift can't run.

·Don't tow the truck which steering system or brake system has been damaged.

37. There is operating method and warning label on the truck. Please operate the truck obey the rules on the label and this manual. Often inspect the nameplate, when damaged or lost please replace it.

38. Fire extinguisher must be prepared at working place. Users can select fire extinguisher along with truck, and it usually is fixed on rear supported leg of safety shelf, it is easy to pick.

Driver and manager should be familiar with the position and operation of fire extinguisher.

39. Please use stock when conveying little goods, it is forbidden to use fork directly.

40. The work road surface for forklift should be stability and unknit, cement, blacktop or beton. If there are snow, ice, water or other eyewinker, bar. Eliminate all, then work. Otherwise the truck will be out of control and lead the safety accident.

41. Move the truck to the place which respects traffic when it anchors. If the reason is brake or turn system, move it by a suitable truck (Reference the part of truck move); Other reasons, use a suitable truck to traipse, tie the cord outside of truck. Please abide by the traffic regulations when traipse the truck on calzada.

42. After take-down the hood, water tank cover board, overhead, backrest of mast, unallowed to operate the truck or load cargo.

43. There are enough light at truck work ground. At night, open the head lamp to collocate enough lamp-house.

44. Only in the event that the truck manufacturer is no longer in business and there is no successor in the interest to the business, the user may arrange for a modification or alteration to a powered industrial truck provided, however, that the user shall:

a) Arrange for the modification or alteration to be designed, tested and implemented by an engineer(s) expert in industrial trucks and their safety;

b) Maintain a permanent record of the design, test(s) and implementation of the modification or alteration;

c) Approve and make appropriate changes to the capacity plate(s), decals, tags and instruction handbook;

d) Affix a permanent and readily visible label to the truck stating the manner in which the truck has been modified or altered together with the date of the modification or alteration, and the name and address of theorganisation that accomplished the tasks.

5.The structure and stability of truck（Prevent the forklift to turn over!）

It is very important for operator to know the truck's structure and relationship between load and stability.

Caution | **the structure of the truck**

The basic structure of the truck is mast (include mast and forks) and body (include tire).

The lift truck keeps the balance of weight between the truck body and the load on the forks with the center of the front wheels as a fulcrum when the rated capacity load is placed in position.

Due care should be paid to the gravity center of loads and forklift to maintain the stability of the truck.

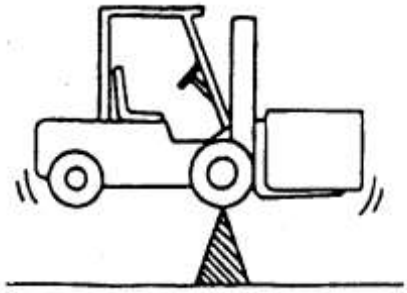

Caution | **Load center**

There is difference in gravity because of the loads' shape, such as box, board and large roller. It is very important to distinguish the difference of the gravity center of loads for evaluating the truck's stability.

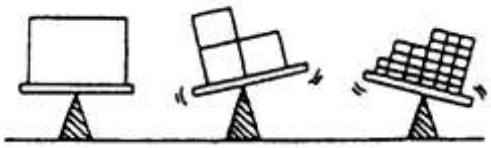

Warning!

If the truck will turn over, do not attempt to get out of the truck because the speed of overturn is much faster than your speed. You should hold the steering wheel handle, stretch your feet, and this practice will let you in the seats. Operator fastens the safety belt please.

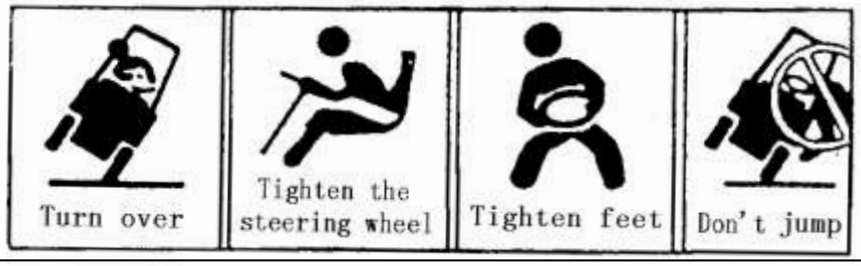

Caution Gravity center and stability

The combined gravity center that is composed of the forklift center and the load gravity center determine the stability of lift trucks.

When unloaded, the barycenter does not change; when loaded, the barycenter is determined by the truck and the load's center.

The barycenter is also determined by the tilting and lifting of the mast.

The combined center is determined by these factors:

Load's size, weight and shape
The lifting height
The tilting angle
The acceleration
The radius of turning
The road and grade's angle
The attachments

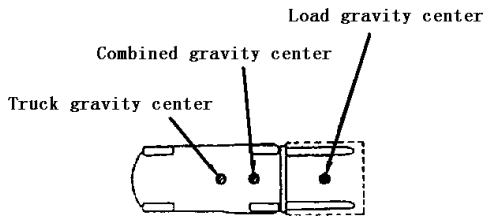

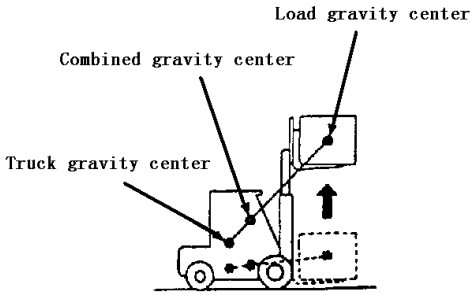

Caution! The stability zone of the barycenter

In order to make the truck stable, the combined center must be in the triangle which is made up of two points that the two front wheels attach ground and the midpoint of the back axle.

If the combined center is in the front driving axle, the two front wheels become two fulcrums, the truck will overturn. If the combined center departures the triangle, the trucks shall overturn in the corresponding direction.

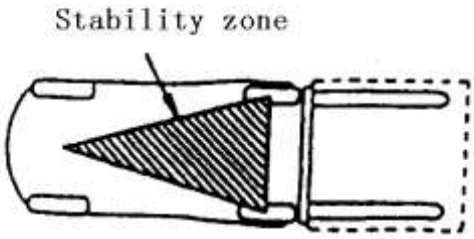

Caution **The max. load（weight and load center distance）**

The load center distance is defined that: the distance between the load center and the fork carriage or the front of the fork carriage. The max. load means the maximum load the truck can charge at the normal load center distance. The relation between the max. load and load center distance shows on the capacity chart. You should reduce the weight of load if the load center distance inclines to the fork carriage.

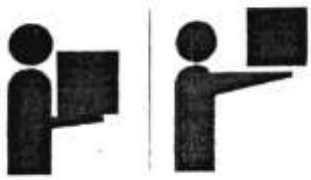

Caution | **Capacity chart**

The chart given shows the relation between the load center and the weight of loads.

Before loading, make sure that the load and the load center distance in the range of capacity chart. If the load's shape is complex, put the most weightily part on the middle of the forks, and close to the fork carriage.

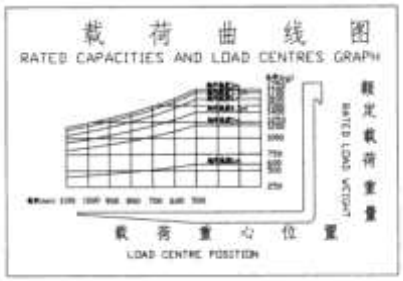

Caution | **Velocity and acceleration**

One object will keep quiescence until force works on it. Also, a moving object will keep moving until force works on it .This is just inertia.

According to inertia, when truck starts moving, one force works backwards, and when truck stops moving, one force works forwards. So, it's dangerous to brake suddenly, because it causes one large force works forwards, and it's easy to cause truck overturn or load slide off.

When the forklift makes a turn, will exert a centrifugal force outward from the curve center. This strength pushes forklift outwards and causes it to turn over. About stability region is very small, so decelerate when turning. If the cargo transported at the high position, it's easier to turn over.

6.Running-in of the new truck

We recommended operating the machine under light load conditions for the first stage of operation to get the most from it. Especially the requirements given below should be observed while the machine is in a stage of 100 hours of operation.

1. Must prevent the new battery from over discharging when early used. Usually should recharge when discharging down to 20%.
2. Perform specified preventive maintenance services carefully and completely.
3. Avoid sudden stop, starts or turns.
4. Oil changes and lubrication are recommended to do earlier than specified.
5. Limited load is 70～80% of the rated load.

7.Daily maintenance

The earnest complete maintenance, can keep the forklift to be at the good status. And the safety of the truck is related with your job and your life.

Warning

except checking lights and operating capability, you should shut off the key switch and pull out the plug before checking electric system.

prohibit operate forklift with trouble.

little trouble brings big accident.

1. Inspect oil leakage: **include hydraulic oil, electrolyte and brake fluid**

Inspect connector of the oil pipe and storage battery to see whether there is any leakage. Use your hand or eyes to inspect, Forbid to use a flame.

2. Inspect tire

Turn the tire valve cap counter clock-wise and move it. Using a tire pressure gauge, measure the inflation pressure, and adjusting it to the specified pressure, if needed. After making sure there is no air leakage from the tire valve, reinstall the cap. Check that each tire does not get damaged at the tread surface or side face. Make sure the wheel felloe is not bended.

Warning!

Since the tires of forklift truck need have a high inflation pressure to carry heavy loads, even a small bending of rims or a little damage at the tread surface could cause an accident.

Warning!

When using an air compressor, at first, adjust the air pressure of the compressor. Otherwise it will cause a serious accident, since the maximum pressure of compressor higher than the pressure tire can bear.

Tire Pressure (GB/T2982-2001)

Truck type	Driving wheel (front wheel)	Turning wheel (rear wheel)
1-1.5t	860KPa	1000KPa
1.8t	1000KPa	1000KPa
2-2.5t	850KPa	900 KPa
3.0t	850KPa	900KPa
3.5t	850KPa	900KPa
4-5t	930 KPa	860KPa

Caution!

Above for the pneumatic tire pressure, is not suitable the solid tire.

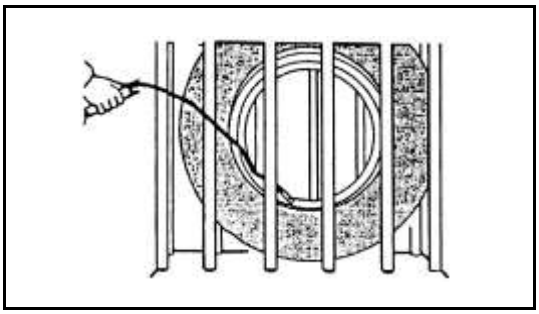

Warning!

All bolts and nuts should be screw tight to the stipulation torque after the tire and the wheel felloe was assembled, then charge is allowed. Types have expansion energy after changing, so the tire pressure does not surpass the rating.

Please put the tire in a protection frame or tie it with a iron chain when charging to prevent accident happening.

3. Replace tire

When the tire is damaged, you should replace it in time. Use a jack to make the tire just beyond ground, then put a wood block under the chassis. Loosen nut ① or ④, replace a new tire. Tighten the nut crossly and symmetrically.

4. Inspect the torque of hub nut

Check the torque of hub nut whether meet the requirement.

①Hub nut

②Divided rim bolt (some trucks do not have)

③Driving axle bolt

④Rear hub nut

⑤Divided rim bolt

Driving wheel (front wheel, expect 1-1.5t)

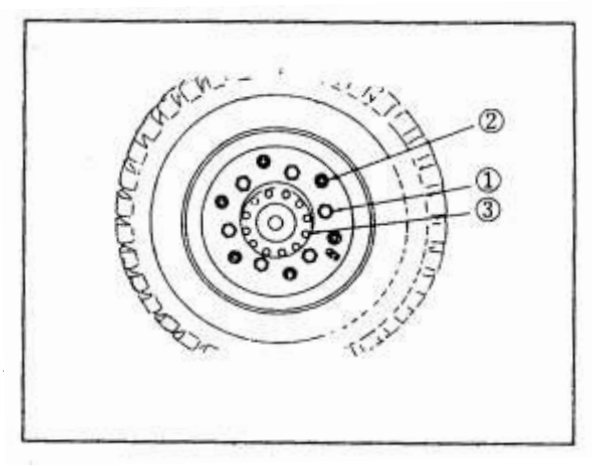

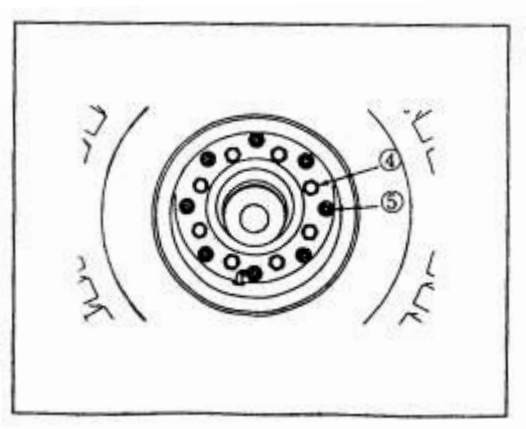

Tighten torque refers to <<Bolt tighten torque force table>>

Truck type	Front nut	Rear nut
1-1.8t	157-176 N.m	76-107 N.m
2-3.5t	441-588N.m	157-176N.m
4-5t	441-588N.m	157-176 N.m

5. Check brake pedal

Step the brake pedal, check it for slowness or block. The proper brake distance is 2.5m when free load. Adjust the height of pedal to 115～125mm. Adjust brake booster push rod clearance to 1-3mm. The brake lamp should be lighted when the brake pedal steps on 10-20mm.

6. Check the parking brake lever

The force of hand brake lever is adjusted by the bolt on the top of lever. The force increases clock-wise screwing, and decreases counter lock-wise screw.

Caution

To step the brake pedal is helpful to tighten or loose the hand brake lever.

7. Check accelerate pedal

The acceleration changes as the stroke changes.

8. Brake fluid level check

Open the brake lubricated cap cover. Check the fluid level in the range allowed. If lack, please add, and check if there is air mix into the pipe.

Caution

Please use brake fluid with one type, do not mix.

·Don't spatter the brake oil onto the surface of paint otherwise the paint will be damaged.

When adding fluid, due should be taken to prevent dirt or water from entering the reservoir.

9. Check hydraulic oil

Loose the cap of hydraulic oil inside of right frame, pull out dipstick and check it if the oil level is between the scales. Add oil when lack.

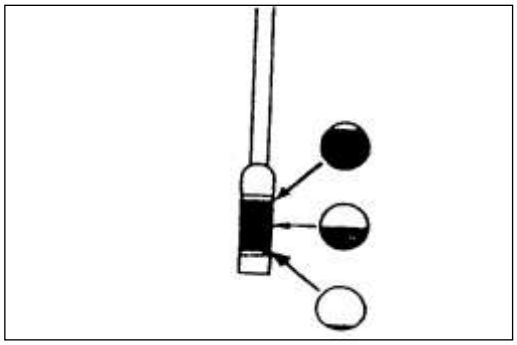

10. Replace hydraulic oil

Replace hydraulic oil once half year on schedule.

1) Stop the truck on smooth ground;

2) Turn steering wheel right to the bottom, and enable the fuel drain plug to have the enough space;

3) Tilt mast backwards to the bottom, and fall the forks to the ground

4) Pull on the hand brake

5) Loose the cap of hydraulic oil, pull out dipstick

6) Set a plate under the chassis, then loose the fuel drain plug, and put the old oil;

7) Dispose the old oil according to local environmental protection laws;

8) Twist the fuel drain plug, join the new hydraulic fluid, and inspect whether have a leakage;

9) Start the truck, lifting for 3-5 times, and tilting for 3-5 times;

10) Add hydraulic oil to required scale.

11. Drivers seat adjustment

Make sure the driver's seat is properly located. If not properly, shift the adjusting lever to the right and move the driver's seat to a position which provides easy access to all foot and hand controls. After adjustment, shake the driver's seat a little to be sure that it is securely locked. Adjust the weight.

12. Check battery

Check the battery whether be installed firmly.

Check proportion of electrolyte. Refer to "battery" section.

Check the terminal for loose or damage. Otherwise it will be adjust or replace.

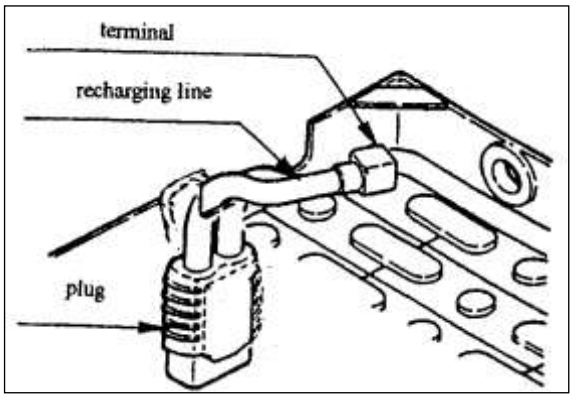

Pull in the plug and close the hood.

Turn on the key switch

13. Instrument check (include battery capacity and error diagnose)

Refer to instrument section.

14. Lifting lever, tilting lever, attachment lever

Check the lifting lever, tilting lever and attachment lever for looseness. Return position well.

15.Mast

Check the mast and the forks to insure that:

1) The fork does not have crack and distortion. Forks were installed firmly and correctly.
2) Check the oil cylinder, oil pipes for leakage.
3) Check the rotation of idler wheel
4) Check the mast for crack or distortion
5) Lifting lever, tilting lever, attachment lever

Check the mast whether works normally, whether have unusual sounds.

16. Mast lubrication

You should grease lubrication to the orbit of mast on schedule base on requirement.

Adjust the lubricate schedule according to your working condition. Add times when busy.

To coordinate forklift's operation, grease lubrication to the guide pulley and in outer upright mounting.

17. Lift chain tension check

① Raise the fork about 10-15 cm above the ground vertically.

② Push the middle of the chain with the thumb. Make sure the tension for the right and left chains are equal.

③ Adjust the chain tension: loosen the lock nut (1) and adjust the chain by nut (2), then locked nut (1).

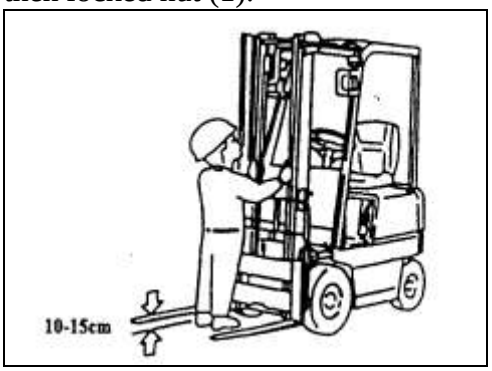

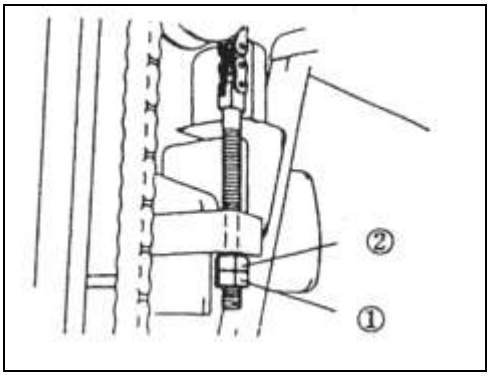

18. Check steering system

Turn the wheel right and left separately to check steering system.

19. Turn signal, horn and other lamp check

Make sure that the turn signal operates properly by pull/push turn signal switch.

Make sure that the sound of horn is properly by press the horn button

Check the other lamp and back-up buzzer.

20. Battery maintenance

Refer to battery section.

21. Other

For instance, pay attention to abnormal noise.

8.Driving and operation

⚠ Warning

Before operating the truck, check all controls and warning devices for proper operation. If any damage or fault is found, don't operate truck until corrected.

Driving

（1） Open the cap, and insert the storage battery plug, then close the cap.

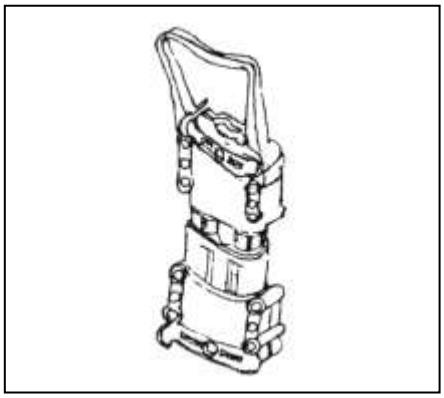

（2）Set the direction switch to neutral position

（3）Turn on key switch

Hold the steering wheel with left hand and turn on the key switch with right hand.

（4）Tilt back the mast

Control the lifting lever to set the bottom of the fork 150-200mm above the ground. Control the tilting lever to fully tilt back the mast.

（5）Control direction lever

Forward：Push the direction lever forward.

Backward：Pull the direction lever backward.

（6）Loosen the hand brake lever

Step the brake pedal and push the hand brake lever to the front position.

Hold the steering wheel with your left hand and attach your right hand.

Traveling

Step the accelerate pedal slowly, the truck will travel forward or backward.

Decrease speed

Loosen the accelerate pedal slowly, the truck will decelerate.

Warning:

Don't step the accelerate pedal and brake pedal at the same time.

Caution:

Decelerate the truck in the situations following:

turning;

close the goods or pallet;

close the deposit area;

enter a narrow passage

the condition of road surface is bad.

Turning

Unlike general passenger-cars, the turning wheels are located at the rear of the truck. This cause the counterbalance swing out when turning.

Slow down the truck and turn the steering wheel toward the side which you are turning. The steering wheel should be turned a bit earlier than as with the front wheel steering car.

Caution

Drive the truck slowly and control the steering wheel carefully, assure there is enough space to steer.

Stopping or parking

①Slow down and press the brake pedal to stop the truck.

② Place the shift lever in neutral.

③ Pull up the parking brake lever.

④ Down the forks on the ground, tilt mast forwards fully.

⑤ Place the key switch in "OFF" to shut off the battery. Remove the key and keep it.

Caution

·Don't dismount from the moving truck, never jump from the truck.

·Don't parking the truck on the working road.

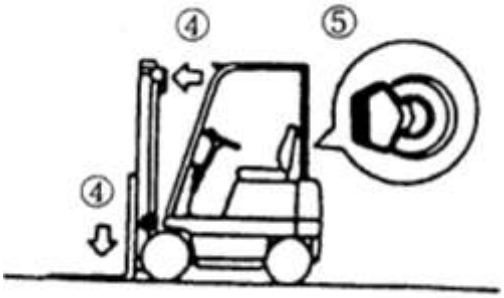

Loading

The forks should be adjusted properly to maintain the balance of load.

Place the truck right in front of the load to be handled.

The pallet should be evenly positioned across both forks.

Insert forks into the pallet as far as possible.

To raise loads from the ground:

① Firstly, lift the forks 5 to 10 cm off the ground or floor and make sure loads lay stably.

② Then tilt the mast backwards fully and lift forks up to 15 to 20 cm off ground then start running.

When handling bulky loads which restrict your vision, operate the truck in reverse except when climbing grades.

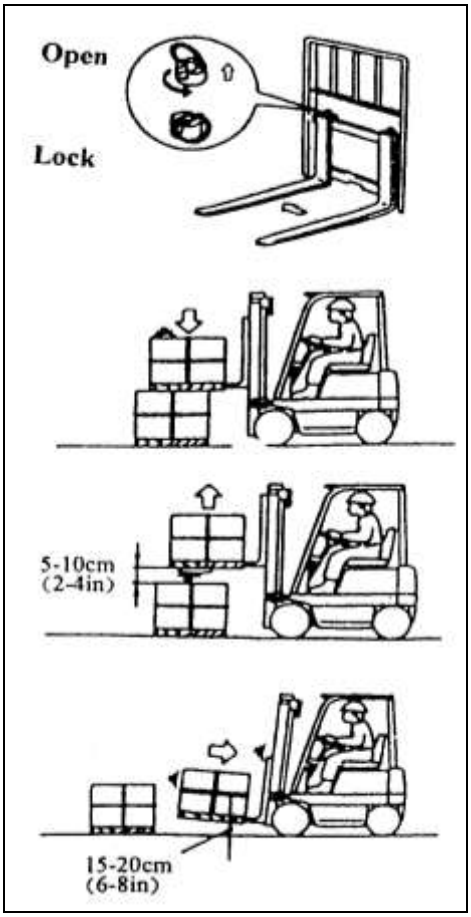

Stacking load

When approaching the deposit area slow down your truck.

Stop the truck right 30 cm far away from the position where your load is to be deposited.

Check the condition of the deposit area.

Tilt the mast forward until forks become to horizontal. Raise forks until they are a little higher than the deposit position.

Move forward to place the load directly over the desired area and stop the truck.

Make sure your load is just over the desired area. Slowly lower the load into position. Make sure the load is securely stacked.

Do necessary lift-tilt operations and then back away to make the forks leave loads.

After making sure the forks leave the load, lower the forks to the basic position (15 to 20 cm off the ground).

Tilt the mast backwards.

Warning!

Never tilt the mast with loads upraised 2m or more.

·Don't leave or dismount from the truck when the load is raised high.

Caution:

Decelerate the truck in the situations following:

turning;

close the goods or pallet;

close the deposit area;

enter a narrow passage

the condition of road surface is bad.

Un-stacking load

When approaching the area where the load is to be retrieved, slow down your truck.

Stop the truck 30 cm far from the load.

Check the condition of the load.

Tilt the mast forward until forks become horizontal. Elevate forks up to the position of the pallet.

Make sure forks are positioned properly to the pallet. Move forward slowly to insert forks into the pallet as far as possible.

Caution

If the forks are hard to be fully inserted, use the following procedure: Move forward and insert 3/4 of the forks. Raise the forks 5 to 10 cm and move backward 10 to 20 cm with the pallet on the forks, and then fall the pallet to the stack. Move forward again to insert the forks fully.

Raise the forks 5 to 10 cm off the stack

Check all around the truck to insure that the path of travel is unobstructed and back away slowly.

Lower forks to a height of 15 to 20 cm above the ground. Tilt the mast backward fully and move to the desired area.

Check after operation

Clean and check the truck after operation:

Damage or leakage.

Add grease if necessarily.

Check the tire if it is damaged or inset with foreign body.

Check the wheel hub nut if it is loose.

Check the height of electrolyte surface.

·If you haven't lift the fork to the max. height in the day, you should lift it to the max. height 2～3 times.

⚠ **Caution**

·If you find any trouble, must repair it in time.

Prohibit operate the forklift before repairing it completely

9.Deposit

Daily Depositing

①Park your truck at the area appointed, and block the wheels to prevent accidental roll.

②Make sure the shift lever on neutral position.

③Pull up the hand brake lever.

④Shut off key switch and operate the lift and tilt lever several times so that the inner pressure in the hydraulic tube will decrease.

⑤Cramp out the electrical outlet.

⑥Take out the key and deposit it in a safe position.

Deposit the truck for a long time

On the basic of the "daily depositing" you should do these checks and maintenance additional:

①Take out plug to prevent discharge and place in shade.

②Brush antirust oil on those parts which is exposed such as piston rod and axle easy-rusted.

③Cover breather hole and so on which humidity easy to enter.

④Cover the whole truck with mantle

⑤All lubrication points add the oil (grease).

⑥Fill up the truck body and counter weight with stow-wood to reduce bearing of the two rear wheels.

⚠ **Warning**

a. The stow-wood must be single and hard enough to support the truck.

b. Don't use a stow-wood higher than 300mm（11.81 inch）.

c. Lift the truck to the height of placing on the stow-wood.

d. Place two same size stow-woods under the left and right sides of the truck.

e. After supporting the truck with stow-wood, swings the truck forward, backward, left and right, check its safety.

① Operate the forklift once a week, and be required to lift the forks to its max. height many times .

② Check the proportion and the level of electrolyte once a month

③ Charge the battery equally once a month.

Working after long deposit

① Get rid of antirust oil.

② Discharge the gear oil from driving axle, decelerator box, and clean up the internal of them. Add new oil.

③ Charge the battery then install it to truck, and do not forget to connect the down-lead.

④ Check carefully before starting, include start, advance, and back off, turning, lift, fall, tilt and so on.

10.Storage battery

Attention for using battery:

1. No firing

Explosive gas can be produced in the internal of battery，smoking，flame and sparkle ,each can easily cause battery explosion.

2. Protection against electric shock

⚠ **Warning**

Battery has high voltage and energy.

Do not bring short circuit.

Do not approach tools to the two poles of the battery，which can cause the sparkle.

3. Correct wire connection

Not allowing instead anode of cathode，otherwise，resulting in sparkle or burning or explosion.

4. Do not over-discharge

If you use the energy of battery till the forklift can't move, you will shorten its working hours.

When the display of battery shows low capacity, please charge it quickly.

5. Inspection for electrolyte

Forbidden to use the truck when the electrolyte is shortage.

Inspection for electrolyte level every week.

When electrolyte level is low，you must add distilled water to the level appointed.

⚠ **Warning**

1. The shortage of the electrolyte will cause the storage battery overheated, even cause the system part of storage battery and electric combustion.

2. Vitriol include in the electrolyte can create burns, see doctor for emergency treatment quickly if touch it un-carefully.

Splashing to the skin or eyes：wash with water 15~20 minutes;

Splashing to the clothes：take it off immediately

Careless drinking：Instead of plenty of water and milk.

3 Wearing glasses、rubber overshoes and rubber glove.

Remaining clean battery

Keep dryness and cleanness on the surface of battery .the poles for connection are also dry and clean. Operator must screw down the vent-cover of battery.

⚠ **Warning**

1. Do not use dry cloth or fiber cloth to clean the battery，avoiding static to cause the explosion.

2. Pull out battery plug.

3. Cleaning with wet cloth.

4. Wearing glasses、rubber overshoes and rubber glove.

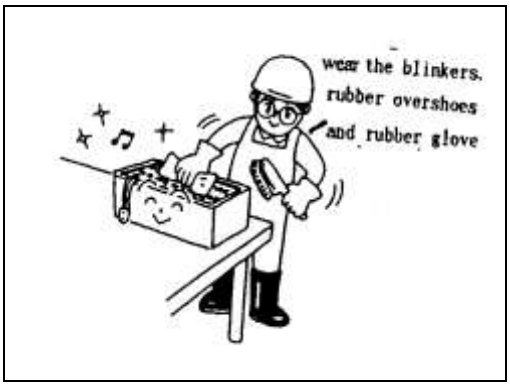

Measure in summer

In summer，water in the electrolyte is easy to evaporate，therefore，electrolyte must often be inspected if electrolyte is low，you must add distilled water to the level appointed.

Warning

Filling with distilled water beyond the regulated range, Spilt electrolyte will cause corrosion and electricity leakage.

Measure in winter

·Keep effective and good surrounding for charging.

· To prevent discharging，when it is cold ，pull out the battery pin.

·Take measures，such as，covering battery for warmth.

·Charge in time after work.

Attentions for charging

1. Please charge in the well-ventilated and appointed site.
2. Mark ‘no smoking’ when charging.
3. Inspect wire and electrical outlet.

Before charging，please examine wire and electrical outlet whether been damaged.

· Check connections whether there is loosen, fasten if any.

· When wire or electrical outlet was damaged，please do not charge.

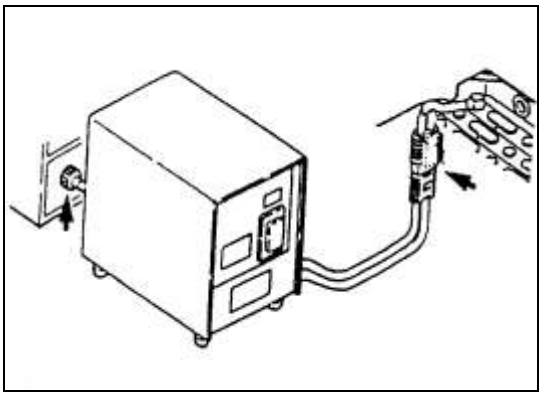

4. Open forklift cover and battery lid when charging，in order to release the explosive gas .
5. In the progress of charging，electrical source switch and battery pin are not to pull out，otherwise will destroy pin and electrical units. The normal procedure is that:

press down the stopping button firstly，and then pick out the pin.

Charger

1. The battery group is equipped with JCD-35A-24 type automatic high frequency computer to charge. The input power supply is AC single-phase with 220V, input current is not lower than 15A. The output voltage is DC36V and its max. charge current is 35A. The charging process is automatic, the detail of using method please refer to the charger operate manual.
2. Connect with earth wire when the charge is used.
3. To replace fuse，make sure that the input and output circuits are disconnected.
4. Only professional person is allowed to disassemble the cover to check and repair.
5. Do not rebuild or disassemble charger.
6. In high temperature season, pay attention

to prevent the charge from destroy caused by high temperature. Stop the charge in short time when it is necessary.

7. If a non-automatic charger is used, the charge voltage, current and charge time should be adjusted, and check the rate of battery electrolyte timely, so as to make sure that the charge of battery group is in good condition. The adjust parameters please refer to “battery charging” in the follow.

8. Do not continuously charge.

Continuously charge several batteries will cause charger overheat even be damaged. You can use the charger again after it has been rested for an hour.

9. Select the charger according to battery’s voltage and capacity (refer to parameter table)

Battery charging

1. There are two charge mode can be adopted, including intelligent charging and constant current charging. For the first charging, adopt the constant current charging.

All the batteries of the new truck are not added electrolyte.

Electrolyte confect

Type / Parameter / Name		D-420	D-500 D-630B D-700
Specific gravity of acid		1.265g/cm^3	1.275g/cm^3
Water and vitriol	Volume ratio	3.1:1	2.6:1
	Quality Ratio	1.7:1	1.65:1
Vitriol Ratio		1.835g/cm^3	
Vitriol standard		Suitable for GB4554-84 or special for battery	

Specification for distilled water:

Ingredient	Index
Appearance	No color crystal
Dry residue %	≤0.005
Resistively(25^{0}C)Ω·cm	≥7×10^4
Fe %	≤0.0004
Cl %	≤0.0005
Mn %	≤0.00002
Organic compound (calculating oxygen) %	≤0.0002
Magnesium oxide + calcium oxide %	≤0.005
Ammonium %	≤0.0008
Nitrate or nitrite %	≤0.0005

Confect course

① Wear the blinkers, rubber overshoes and rubber glove.

② Please pay attention to add the acid to water slowly, churning up at the same time, make it mix equality.

⚠CAUTION

Don’t pour the water to the acid, in order to avoid the temperature of liquid surface turning high suddenly to cause boiling and splashing out to hurt someone.

③ When the electrolyte is cooled to 30℃, pour it into battery. It is proper to pour the electrolyte 15-20mm above the protection piece (without a dobber) or 1mm distance between dobber and cover (with a dobber).

④ Only when the temperature of the electrolyte is below 35℃ (after about 3-5 hours), can be first charged.

⚠Caution

The time that is from pouring the electrolyte into the battery to starting first charging can't be exceeded 12 hours.

⑤ The specific charging cable should be connected to charging machine.

⚠Caution

Be sure to notice that the polarity sign on the plug must keep comfortably to the out specific charging end node.

When the charging cable is connected to the storage batteries, please pay attention to keeping comfortably on the polarity sign. Otherwise maybe you will damage your battery.

⑥ Inspect

The voltage value that the power needed is the number of the serial battery three times.

Truck type	Battery	Battery voltage（V）
1-1.8t	D-420	48
2-2.5t	D-630B	48
3t,3.5t	D-500	80
4-5t	D-700	80

Inspect the charging machine.

·Inspect every battery's polarity.

⑦ Charging ways:（time, current as the form）

a. 1st phase: most of the single battery's terminal voltage steps up to 2.4 V;

b. 2nd phase: the electrode give off a large number of bubbles, the voltage and the specific gravity steadies 4 hours and the charging value gets to 4.5-5 times than rated capacity.

Truck type	Battery type	Charging voltage (V)	Charging current(A)	
			1st phase	2nd phase
1-1.8t	D-420	72	40	20
2-2.5t	D-630B	72	63	32
3t,3.5t	D-500	120	50	25
4-5t	D-700	120	70	35
Charging time（h）			35-45	35-45

c. Adjusting the specific density and height for the electrolyte

If the specific gravity is smaller, it will be adjusted as follow: then take out some electrode from the battery, pour the compounded sulfuric acid that its specific gravity is 1.400g/cm$^{3.}$

If the specific gravity is larger, it will be adjusted as follow: then take out some electrode from the battery, pour some distilled water, but you must keep the electrode height accord with demand

d. After adjusting, you should keep charging on 1 hour; make the density of electrode even upper and under. At this time we have finished the first charging.

e. Close the pouring plug and clean the battery surface acid, then you can use it.

Caution

During the charging, the temperature of electrolyte should not be exceeded 45℃。 Otherwise you should low the temperature. If the temperature do not lowing, you should stop recharging, till the temperature drop down.

Daily charging

The battery that has been made the first charging and used regular, then charged again, is named daily charging.

Its way is almost same as the first charging.

The recharging value is 1.2 times than the last electric discharging. But the electric-change for new battery's fore five times should be 1.5 times than the last electric discharging.

During any charge, the temperature of electrode should not be exceeded 45^0C， otherwise it should be taken measures such as reducing artificially charging current or lowing the temperature. If the temperature doesn't drop, you should stop charging, till the temperature dropping down.

Truck type	Battery type	Charging voltage (V)	Charging current(A)	
			1st phase	2nd phase
1-1.8t	D-420	72	55	25
2-2.5t	D-630B	72	88	44
3t,3.5t	D-500	120	70	35
4-5t	D-700	120	96	47
Charging time（h）			4-6	6-10

Adopt intelligent charging for the daily charging. The first five charging should using Equilibrium Charge according to the intelligent charger operate manual.

Equilibrium Charge

During using of the battery, it often occur disequilibrium among the voltage, the density and the capacity.

Compared to most of the batteries , often finds that single battery's proportion of voltage and electrolyte rises slowly during the course of charge and during the course of discharge, its battery's proportion of voltage and electrolyte declines faster than most of other batteries.

Make equilibrium charge in the following case：

a. discharge voltage often drop down ending voltage；
b. discharge current is often larger；
c. Not charge in time after discharge
d. The electrolyte is mixed with impurity with a little harm.
e. It often be charged deficient or has not been used for a long time；
f. After taking out the battery group for checking or cleaning settling.

The method of Equilibrium Charge：

① Firstly, charge the battery normally, and then rest for 1 hour after the end of charge.

② Charge it again with the current belongs to the second normally charge until the electrolyte gives off a large number of bubbles, then stop charging for 1 hour.

③ Repeat it several times as mentioned above until the voltage and the density keep invariable and the battery gives off a large number of bubbles immediately when charge again.

Complementarity Charge

·If one day's work cannot be fulfilled

with one charge, carry out opportunity charge during breaks.

When the temperature of circumstance is low, carry out opportunity charge.

Charge for long-term storage

· Carry out equilibrium charge before storing.

· Carry out equilibrium charge once every 15 to 30 days during the storage period.

· The special orders storage battery carries on the charge according to "Accumulator Instruction for use".

Battery replacement

Caution

Be sure that the voltage, the capability, the size and the weight of the new battery are according with the forklift truck before replacing the battery.

Forbid to use battery with different voltage or capacity or weight except being promised by factory.

Replacement step

1. Stop the forklift truck on the plain ground， pull up the hand brake lever.
2. Open the hood cover.
3. Disconnect the battery plug.

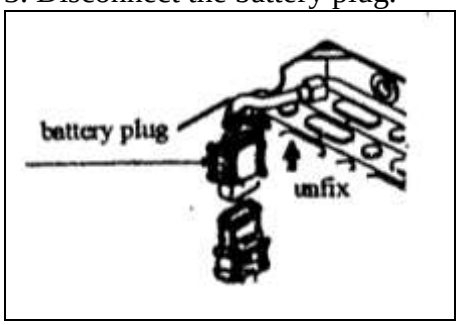

4. Remove the lock pin.

5. Use the proper tools to pull up the battery

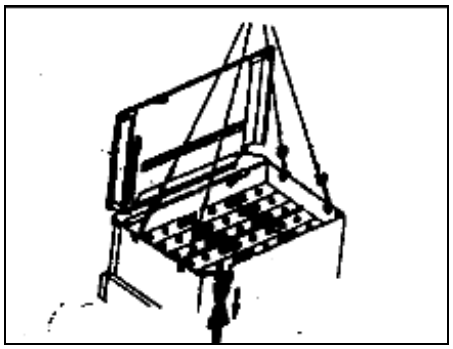

The weight and dimension of Battery

Model / Weight (kg)	1-1.8t
Min.	700
Max.	900
Dimension(mm)	465×980×780

Model / Weight (kg)	2-2.5 t
Min.	800
Max.	1000
Dimension(mm)	570×1028×780

Model / Weight (kg)	3 -3.5t
Min.	1200
Max.	1500
Dimension(mm)	710×1028×780

Model / Weight (kg)	4-5 t
Min.	1900
Max.	2200
Dimension(mm)	800×1128×780

Caution

The box must be pulled up with using 4 holes of the pothook at the same time. It is not allowed to pull up with only two holes. Otherwise, the asymmetric power will cause the battery damaged.

The steering wheel and other equipment should not be bumped, avoid being damaged when pulling up the battery box.

6. After exchange the full electricity of battery, plug into the lock pin, shut to the hood cover, and plug into the pin of the battery hard.

The waste electrolyte of the replaced battery should be dealt according to environment and protection law rather than reject at will.

The proportion and level of electrolyte

Caution

If the level of the electrolyte is low, using the battery will cause the battery over-heat and shorten the battery's life.

1. Inspect electrolyte

The battery without a dobber

It is proper to pour the electrolyte 15-20mm above the electrode plate.

The battery with a dobber

Depending on the dobber of the winded cover, and read the level position of the electrolyte.

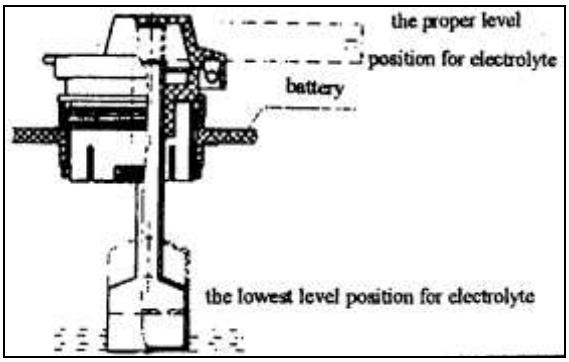

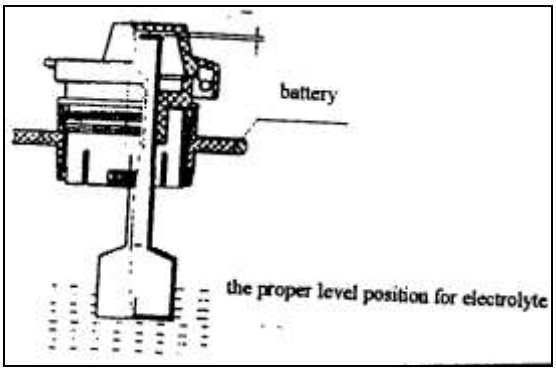

2. Replenish the distilled water

·Wear the blinkers, rubber overshoes and rubber glove.

① Using the measuring cylinder to take out the distilled water with a certain quantity.

② Open the battery cover for every battery cell.

③ Imbibe distilled water with injector and then supply it into the battery.

The battery with a dobber

When the red dobber rises, the white line is appeared, please stop to replenish the distilled water.

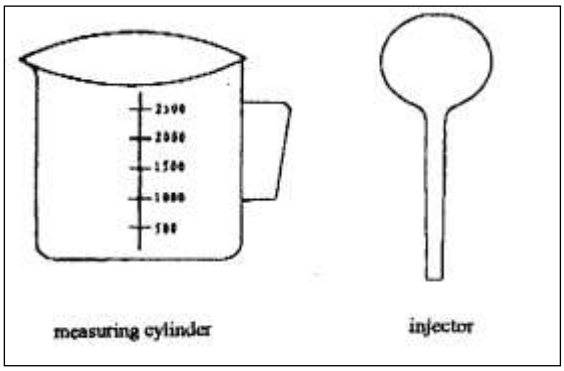

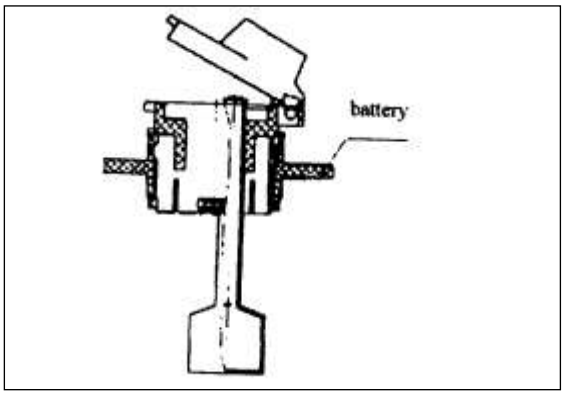

The battery without a dobber

When the electrolyte is above 15-20mm of the electrode plate, stop replenishing the distilled water.

④ After replenishing the distilled water, close the pouring plug and battery cover.

⑤ Using the damp cloth to clean the surface of every battery cell.

⚠ **CAUTION**

It is not permitted to overrun the appointed tiptop level when replenishing the distilled water. Adding it too much will result in leakage of electrolyte, and it will damage the truck when charging and discharging.

Draw it out with injector if adding it too much.

3. Read the specific gravity

1) The specific gravity of the electrolyte should change follow the temperature.

① Use thermometer to measure the temperature of electrolyte.

② Put the straw of densimeter into electrolyte uprightly, extrude rubber tube with hand and the electrolyte will be sucked into the glasses tube and then the floater of the densimeter will float.

③ Numerate the reading of the densimeter.

Notice: The dobber of densimeter must rise uprightly without depending on the glass pipe.

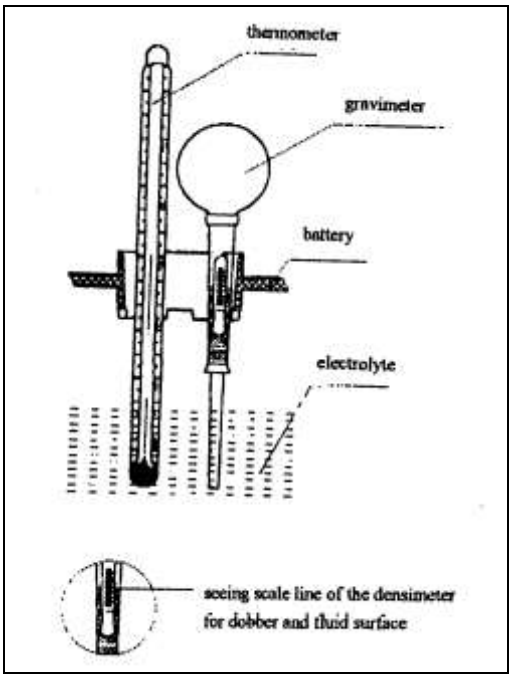

2) Specific gravity measure

Using the densimeter to measure the specific gravity.

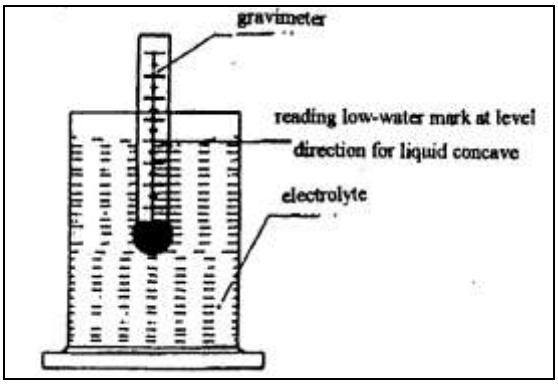

3) Conversion of the specific gravity

The specific gravity at the standard temperature of 30^0C should be converted as follow:

$D_{30} = D_t + 0.0007(t - 30)$

Where : D_{30} ——the specific gravity at the standard temperature of 30^0C

D_t ——the specific gravity at the temperature of t^0C.

t —— the temperature of the distilled water during convert.

· The specific gravity that was refered in this book is measured all at the temperature of 30℃.

The Automatic Watering System of the Forklift Battery

1. Automatic Watering System

Makeup of the Automatic Watering System：

- Automatic Watering Plug
- End Plug
- Floater
- T-piece & L-piece
- Flow Indicator（with filter）
- 6mm, 8mm ,10mm watering pipe
- Male & Female couplings (Kv10 and KV6, etc.)
- Water Tank

2. Application Specification & Installation

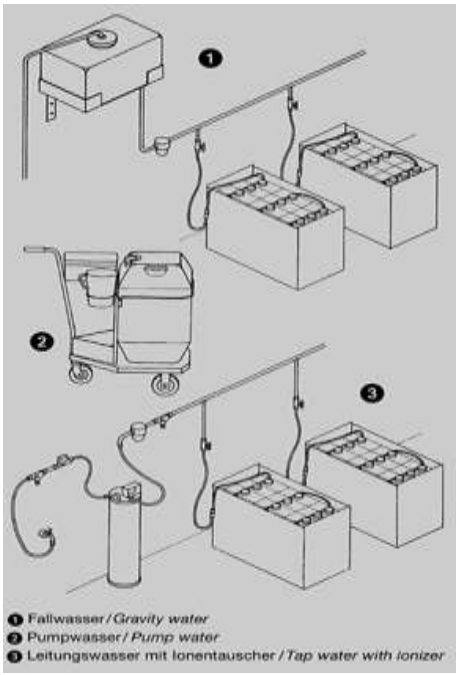

During the period of development and long-term practical usage, the leak tightness of automatic watering system has received complete recognition.

But when you use it, you need to keep the automatic watering system clean and there can't be any filth on the surface.

How to properly install the automatic watering system：
Our automatic watering system is easy to operate, no need to finish watering the electrolyte in the storage battery by hand, time saving and labor saving, besides, it can extend the service life.

How to correctly install the water tank, choose proper floaters, how to confirm the specification & quantity of the installed accessories according to different types of battery, including correct application rules for automatic watering plug, watering pipe, T/L-pieces and male/female couplings as well as the cleaning of the flow indicator. We will give you a brief introduction for the above items as follows:

Meanwhile we will offer detailed installation drawings to ensure that the clients can correctly install and standardize the operation.

battery spec.	Watering head / T-piece	T-piece（6-10-6）	Flow indicator（filter）	6mm Watering pipe	10mm Watering pipe	end plug	Male/female K10	Water tank specification
24V	12 pcs	1 pcs	1 pcs	3m	5m	2pcs	1pcs	30L 1pcs
48V	24 pcs	1 pcs	1 pcs	5m	5m	2pcs	1pcs	30L 1pcs
80V	40 pcs	1 pcs	1 pcs	10m	5m	2pcs	1pcs	60L 1pcs

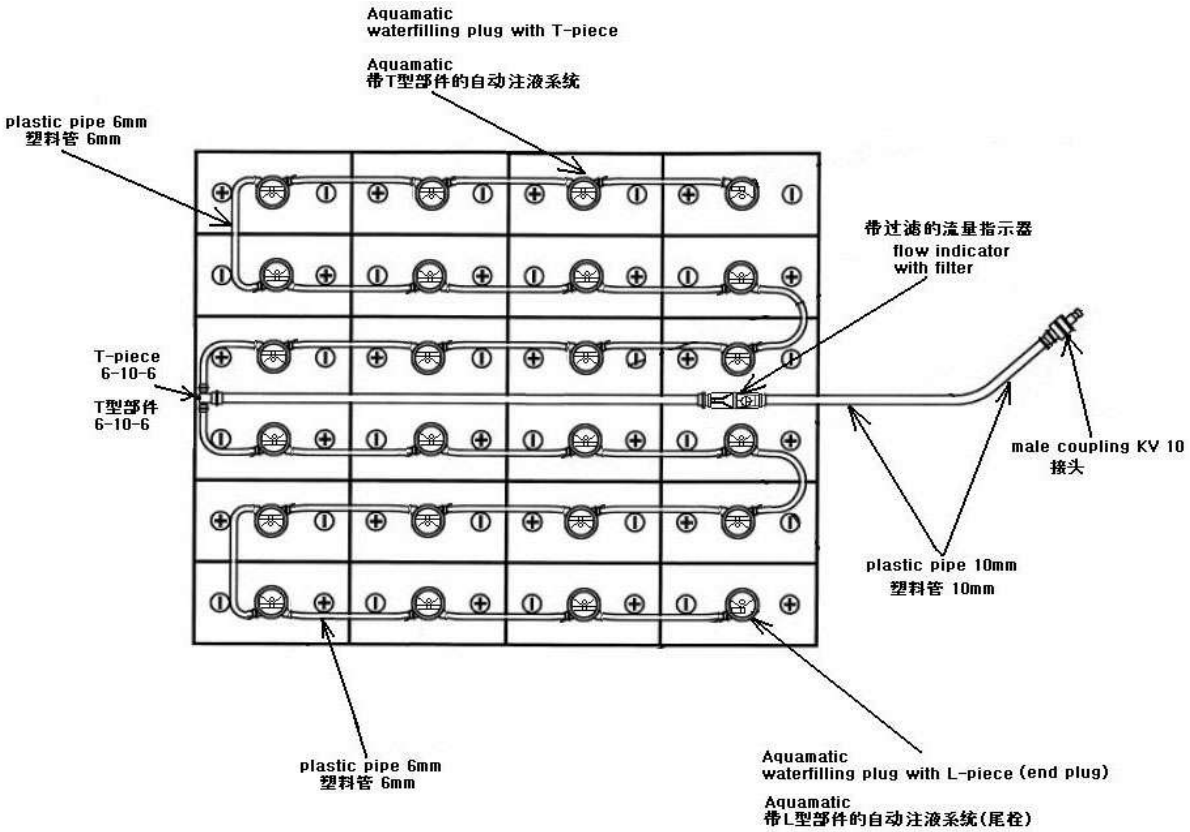

Automatic Watering System of Forklift Storage Battery-48V battery group

Floater

How to choose proper floaters correctly：

- According to different storage battery, we have five kinds of floaters for you to choose. In order to achieve our expected standard and completely reflect the effectiveness of the automatic watering system, the most important thing is to choose proper floaters.

At present our company can offer a rule for the client to make judgment and choose the type of floater. (see diagram)

- The diagram the installation way of the floaters：

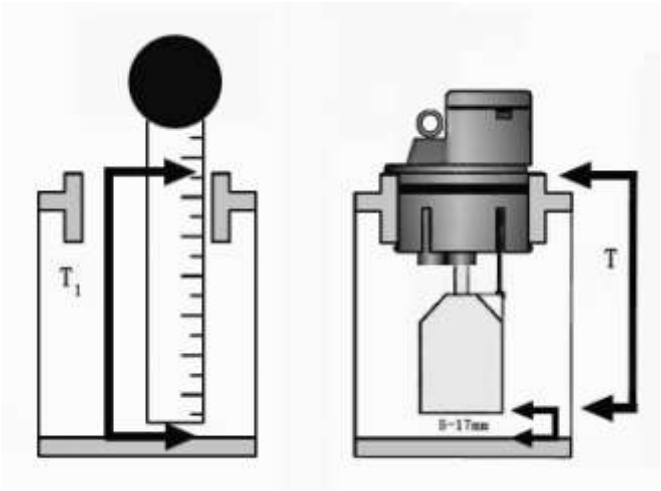

$T = T_1 - (5 \sim 17mm)$

T approaching	47	50.5	58	61	72
Float	13	16.5	24	27	38

Watering Pipe

- Our company offers watering pipes of different types and the clients can choose what they need according to the specification of the battery.

The watering pipe must be perfectly sealed with T-piece and L-piece.

Notes during the filling process:

1. In order to ensure a safe watering process, we hereby recommend you to use flow indicator (with filter), the flow indicator with filter can not only timely indicate whether it finishes watering, but also avoid unclean impurities entering the battery to result interruption.
2. The watering pressure should be within the range of 0.2-0.6, no less than 200mbar。
3. You'd better conduct watering within the specified periods, because frequent filling will lead to overflowing for too much water, which will do great damage to the storage battery.

Note：Filling after finishing charging is the best ideal state, besides, do not filling before charging.

Cleaning

During the period of development and long-term practical application, the leak tightness of automatic watering system has been completely approved.

When you use it, you must pay much attention to keep the automatic watering system clean. No filth remaining on the surface.

The users should regularly clean the watering plug for the plug is a kind of plastic good. Clean the surface directly with tap water and no need to use other detergent.

Structure Diagram of the Watering Plug：

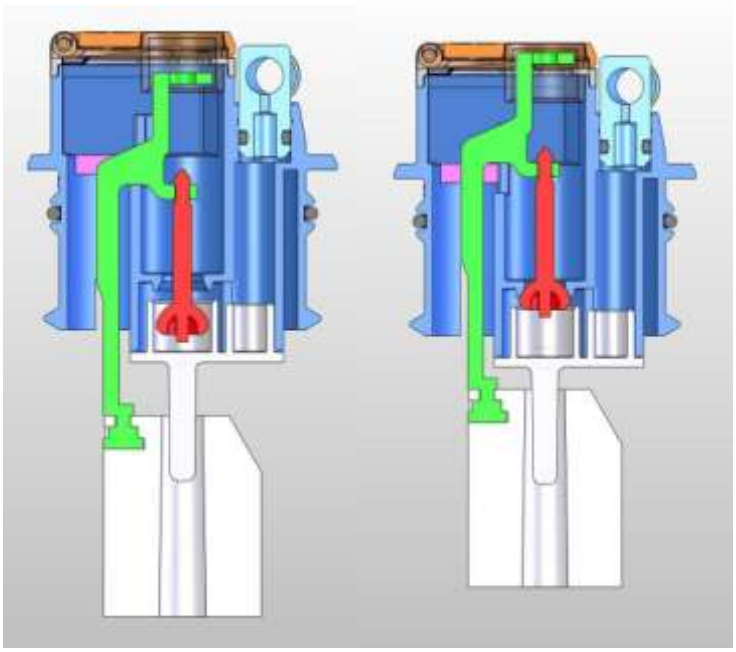

open close

Characteristics of the Automatic Watering System

- No need to water by hand, labor saving.
- No malfunction factor leading to damage the battery.
- Easy & safe operation.
- Ensure a precise electrolyte level in every battery cell.
- Prevent leakage when watering.
- Effectively avoid the acid liquid to erode the storage battery and the electrolytic bath.
- Extend the service life of the battery.
- Environment protection.
- Save energy.

Function Introduction:

Function of the automatic watering system: the floater of the automatic watering plug can reach correct water level, when the level rises in the cell, the pressure closes the valves and prevents further water entering the cell. When the system finishes watering, the flow indicator will stop running and you can see the water-level indicator clearly through the top of the watering system.

Besides, the material of floater can avoid damage and ineffectiveness.

As for the structure of automatic watering system, there is a terraced step, when the electrolyte gas rises to the watering plug, the terraced part can prevent the leakage of the electrolyte gas as well as quickly cool the electrolyte gas to make them go back to the storage battery in time.

11.Maintenance summarization

·The fork lift truck needs inspection and maintenance periodically so as to make it in good working condition.

· Inspection and maintenance are usually ignored; you'd better find the problems and solve it in time.

· Use the orthodoxy spare part of ZHEJIANG HANGCHA ENGINEERING MACHINERY CO., LTD.

· Don't use different oil when changing or adding oil.

· Forbid to repair the fork lift truck if you haven't been trained.

· Don't rave about oil and electrolyte used at will, and carry on handling according to the local environmental protection laws and regulations.

·Maintenance on schedule.

· After you make maintenance, you'd better make a record.

Notice

No smoking.

You should shut off key switch and pull off the plug before service.（except some trouble shooting）.

Clean the electric part with compress air, do not with water.

Do not place your hands, feet or any part of body into the gap between the mast and instrument.

The weight and dimension of the counterweight:

Tonnage	1-1.5t		1.8t	2-2.5t	
Weight (kg)	426	600	770	743	1000
Dimension (mm×mm×mm)	294×1070×912		329×1070×912	382×1134×940	

Tonnage	3t	3.5t	4-4.5t		5t
Weight (kg)	1175	1495	1358	1522	1918
Dimension (mm×mm×mm)	382×1134×940	462×1134×940	465×1280×978		465×1280×978

The dimension of mast

Model	1-1.5t	2-2.5t	3t	3.5t
Dimension (mm×mm×mm)	1895×1072×480	1915×1118×555	1955×1120×580	1955×1120×585

Model	3.5t	4-4.5t	5t
Dimension (mm×mm×mm)	1955×1120×585	2245×1350×550	2395×1350×555

Preventive maintenance schedule

Battery ○ — Check, revise, adjust ×— Replace

Checking item	Service required	Tools	Daily (8 hrs)	weekly (40 hrs)	Monthly (166hrs)	Trimonthly (500 hrs)	Semiannually (1000 hrs)
Storage battery	Electrolyte level	Eyeballing		○	○	○	○
	Electrolyte proportion	Densimeter		○	○	○	○
	Battery quantity		○	○	○	○	○
	Terminal looseness		○	○	○	○	○
	Looseness of connecting wire		○	○	○	○	○
	cleanness of the battery surface		○	○	○	○	○
	If there are tools on the battery.		○	○	○	○	○
	The tightness and smoothness of air cap			○			
	Far away from firing		○	○	○	○	○

Controller

Checking Item	Service Required	Tools	Daily (8 hrs)	weekly (40 hrs)	Monthly (166hrs)	Trimonthly (500 hrs)	Semiannually (1000 hrs)
Controller	Check connector for worn					○	○
	Check contactor for running					○	○
	Check micro move switch for running					○	○
	Check the connection among motor, battery and power unit.					○	○
	Check the controller error diagnose system						First time 2 years

Motor

Checking Item	Service Required	Tools	Daily (8 hrs)	weekly (40 hrs)	Monthly (166hrs)	Trimonthly (500 hrs)	Semiannually (1000 hrs)
Motor	Clean the foreign body on the motor				○	○	○
	Clean or replace the bearing						○
	Check the carbon brush and commutater for worn, whether spring is normal				○	○	○
	Whether the connection is correct and firm.				○	○	○
	Brush carbon powder on shift plate and shift device.					○	○

Driving system

Checking Item	Service required	Tools	Daily (8 hrs)	weekly (40 hrs)	Monthly (166hrs)	Trimonthly (500 hrs)	Semiannually (1000 hrs)
heck wheel hub bolts for tighten torque	Check for noise		○	○	○	○	○
	Check for oil leaks		○	○	○	○	○
	Change oil						×
	Check wheel hub bearing for looseness，noise			○	○	○	○
	Clean and replace grease					×	×
	Check wheel hub bolts for tighten torque				○	○	○

Wheels (Front, Rear Wheels)

Checking Item	Service required	Tools	Daily (8 hrs)	weekly (40 hrs)	Monthly (166hrs)	Trimonthly (500 hrs)	Semiannually (1000 hrs)
Tyre	Check for charge pressure	Barometer	○	○	○	○	○
	Check for abrasion， cracks or damage		○	○	○	○	○
	Check for spikes ， stones or foreign matter				○	○	○
	Check the wheel hub for damage		○	○	○	○	○
	Check the split body wheel hub-bolts for looseness	Test hammer	○	○	○	○	○

Steering System

Checking Item	Service required	Tools	Daily (8 hrs)	weekly (40 hrs)	Monthly (166hrs)	Trimonthly (500 hrs)	Semiannually (1000 hrs)
Steering wheel	Check for clearance		○	○	○	○	○
	Check for radial looseness		○	○	○	○	○
	Check for axial looseness		○	○	○	○	○
	Check for operation		○	○	○	○	○
Steering Gear box and valve	Check mounting bolts for looseness				○	○	○
Steering axle	Check king pins for looseness or damage				○	○	○
	Check for deflection, deformation ,cra cks or damage				○	○	○
	Check for fixing condition	Test hammer			○	○	○
Steering cylinder	Check for operation		○	○	○	○	○
	Check for oil leaks		○	○	○	○	○
	Check for looseness when fixing or hinging				○	○	○

Brake system

Checking item	Service required	Tools	Daily (8 hrs)	weekly (40 hrs)	Monthly (166hrs)	Trimonthly (500 hrs)	Semiannually (1000 hrs)
Brake pedal	Check for free travel	Scale	○	○	○	○	○
	Check for pedal travel		○	○	○	○	○
	Check for operation		○	○	○	○	○
	Check for air mixed in brake piping		○	○	○	○	○
Parking brake	Check for lever is securely locked and has sufficient lever stroke		○	○	○	○	○
	Check for operation		○	○	○	○	○
Rod, Cable, etc	Check for operation				○	○	○
	Check connections for looseness				○	○	○
	Check decelerator connector lug for abrasion					○	○
Hoses and Pipes	Check for damage, leakage or collapse				○	○	○
	Check connection or clamping parts for looseness				○	○	○
Brake master cylinder and wheel cylinder	Check for leakage		○	○	○	○	○
	Check for fluid level, Change brake fluid		○	○	○		×
	Check master cylinder and wheel cylinder for operation					○	○
	Check master cylinder and wheel cylinders for fluid leaks or damage					○	○
	Check master cylinder piston cup, and check valve for wear or damage change						×

Hydraulic system

Checking item	Service required	Tools	Daily (8 hrs)	weekly (40 hrs)	Monthly (166hrs)	Trimonthly (500 hrs)	Semiannually (1000 hrs)
Hydraulic reservoir	Check for oil level, Change oil		○	○	○	○	×
	Clean suction strainer						○
	Clean foreign matter						○
Control lever	Check levers for looseness		○	○	○	○	○
	Check for operation		○	○	○	○	○
Control valve	Check for oil leak		○	○	○	○	○
	Check relief valve and tilt lock valve for operation				○	○	○
	Measure relief pressure	Oil press gauge					○
Hose, Piping Hose Reel & Swivel Joint	Check for oil leak, looseness, collapse, deformation and damage				○	○	○
	Replace hoses.						× 1-2 years
Hydraulic Pump	Check hydraulic pump for oil leak or noise		○	○	○	○	○
	Check pump drive gear for wear				○	○	○

Lifting system

Checking item	Service required	Tools	Daily (8 hrs)	weekly (40 hrs)	Monthly (166hrs)	Trimonthly (500 hrs)	Semiannually (1000 hrs)
Chains & Sheave	Check chain for tension, damage or rust		○	○	○	○	○
	Add lubrication for chains				○	○	○
	Check connection of chain anchor pin and chain for looseness				○	○	○
	Check sheaves for deformation or damage				○	○	○
	Check sheave bearings for looseness				○	○	○
Attachment	Perform general inspection				○	○	○
Lifting cylinder and tilting cylinder	Check piston rod, rod screw and connection for looseness deformation or damage	Test hammer	○	○	○	○	○
	Check cylinders for operation		○	○	○	○	○
	Check for oil leak		○	○	○	○	○
	Check pins and cylinder bushings for wear or damage				○	○	○
Fork	Check forks for damage, deformation or wear				○	○	○
	Check for stopper pins for damage or wear					○	○
	Check fork base and hook welding for defective cracks or wear				○	○	○
Mast & Lift Bracket	Check weld between cross members with outer and inner masts for defective, cracks or damage				○	○	○
	Check tilt cylinder bracket and mast for defective weld ,cracks or damage				○	○	○
	Check outer and inner masts for defective weld, cracks or damage				○	○	○
	Check for defective weld, cracks or damage of lift bracket				○	○	○
	Check roller bearings for looseness				○	○	○
	Check mast support bushings for wear or damage						○
	Check mast support cap bolts for looseness	Test hammer			○ (for 1st time only)		○
	Check lift cylinder tall bolts, piston rod head bolts, U-bolts, and piston head guide bolts for looseness	Test hammer			○ (for 1st time only)		○
	Check rollers, roller pins and welded parts for cracks or damage				○	○	○

Others

Checking item	Service required	Tools	Daily (8 hrs)	weekly (40 hrs)	Monthly (166hrs)	Trimonthly (500 hrs)	Semiannually (1000 hrs)
Overhead Guard & Load Backrest	Check for tight installation	Test hammer	○	○	○	○	○
	Check for deformation, cracks or damage		○	○	○	○	○
Turn signal	Check for proper operation and tight installation		○	○	○	○	○
Horn	Check for proper operation and tight installation		○	○	○	○	○
Light & Lamps	Check for proper operation and tight installation		○	○	○	○	○
Buck-up Buzzer	Check for proper operation and tight installation		○	○	○	○	○
Meters	Check meters for proper operation		○	○	○	○	○
wire	Wire damage or looseness			○	○	○	○
	Looseness of Electric circuit Joint				○	○	○

Replace the key safe parts termly

·Some parts should be checked periodically to detect the damage, for improving the safety, users should replace the parts periodically which are listed in the table as follows.

·If the parts are abnormal before the replacing time is coming, it should be replaced immediately.

Key safe part's description	Term of using (year)
Brake hose or tube	1~2
Hydraulic hose for lifting system	1~2
Lifting chain	2~4
High-pressure hose ， hose for hydraulic system	2
Brake oil cup	2~4
Brake master cylinder，brake slave cylinder cover and dust sleeve	1
Inner hermetic，rubber matter	2

Table for bolt's tight torque

Unit N m

Bolt's diameter	Grade			
	4.6	**5.6**	**6.6**	**8.8**
6	4～5	5～7	6～8	9～12
8	10～12	12～15	14～18	22～29
10	20～25	25～31	29～39	44～58
12	35～44	44～54	49～64	76～107
14	54～69	69～88	83～98	121～162
16	88～108	108～137	127～157	189～252
18	118～147	147～186	176～216	260～347
20	167～206	206～265	245～314	369～492
22	225～284	284～343	343～431	502～669
24	294～370	370～441	441～539	638～850
27	441～519	539～686	637～784	933～1244

Note: Use entirely 8.8 grade bolt in the important joint position.

·Bolt's grade can be found in the head of the bolt, if it can't be found, the grade is 8.8.

Table for oil used in the truck

Name	Trademark, code name	capability（L）	Remark
Hydraulic oil	Normally: L— HM32 cold environment :L-HV32	22-25	1-1.8t
		25-35	2-3.5t
		40-45	4-5t
Gear oil	GL-585W/90	5	Use in driving axle and gear-box
Brake Fluid	(Choice) HZY3 or DOT3	1.5	
Industrial Vaseline	2#		Electrode of storage battery
Lubrication grease	Automobile general lithium base lubricant		

12.Truck's convey, lifting, towing

Convey

The Fork Lift Truck is designed for material handling only, It is inappropriate for long-distance transportation. If needed, the Fork Lift Truck must be transported by ship, train or lorry, of 5T loading. Use a lifting pallet to hoist the truck.

• Use the steel wire ropes to tie the holes in the two side of the outside mast's beam and the rear of truck's body, and then use the lifting device to hoist the truck.

Hoist the truck

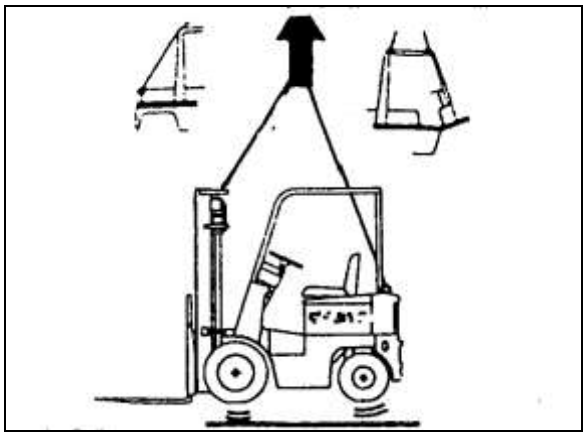

·Use the steel wire ropes to tie the holes in the two side of the outside mast's beam and the hook of the counter balance, and then use the lifting device to hoist the truck. The steel wire rope attach to the counterweight should through the safeguard gap, and make the safeguard not be distorted.

Warning

When hoist the truck, don't coil the overhead guard with the steel wire.

The steel wire ropes and the lifting device must be very firm to support the truck because the truck is very heavy.

Don't lift the truck by hoist the overhead guard.

When lifting the truck, don't take yourself below the truck.

Towing

The towing rod on the bottom of the counter balance is used to pull and drag the truck.

Loosen the brake lever and turn off key switch.

Set switch lever to neutral position

Warning

a. Don't tie the steel wire ropes on the unfixed position.
b. Don't carry a load to steel wire ropes suddenly.
c. The truck would be damaged if you tow it with the electric lock working.

13.Parameters

Parameters of CPD10/15/18J

NO.	Item		Units	CPD10J	CPD15J	CPD18J
1	Ratio capacity		kg	1000	1500	1800
2	Load centre		mm	500	500	500
3	Lifting height	Max.	mm	3000	3000	3000
		Free	mm	135	135	135
4	Max. Lifting velocity	Fully loaded	mm/s	290	290	270
5	Tilting angle	front/rear	°	5/10	5/10	5/10
6	Max. Traveling velocity	Fully loaded	mm/s	12	12	12
7	Max. Crawling slope	Fully loaded	%	13	13	13
8	Turning radius	Min.	mm	1780	1780	1815
9	Ground clearance	Min.	mm	110	110	110
10	Stopping distance	Max.	m	2.5	2.5	2.5
11	Overall Dimension	L	mm	2080	2080	2115
		W	mm	1090	1090	1138
		H	mm	2075	2075	2075
12	Weight (self)	Include battery	kg	2770	2940	3090
13	Battery	Standard	V/Ah	48/420	48/420	48/420
		Optional	V/Ah	48/480	48/480	48/480
14	Motor	Driven	kW	8	8	8
		Lifting	kW	7.8	7.8	7.8
15	Controller	Type		MOSFET	MOSFET	MOSFET
		Manufacturer	Tow	Danaher	Danaher	Danaher
			Lifting	Danaher	Danaher	Danaher
16	Tyre	Front ×2		6.00-9/2	6.00-9/2	21×8-9/2
		Rear ×2		5.00-8/2	5.00-8/2	5.00-8/2

Parameters of CPD10/15/18JC1

NO.	Item		Unit	CPD10JC1	CPD15J C1	CPD18J C1
1	**Ratio capacity**		kg	1000	1500	1800
2	Load centre		mm	500	500	500
3	Lifting height	Max.	mm	3000	3000	3000
		Free	mm	135	135	135
4	Max. Lifting velocity	Fully loaded	mm/s	290	290	270
5	Tilting angle	front/rear	°	5/10	5/10	5/10
6	Max. Traveling velocity	Fully loaded	mm/s	12	12	12
7	Max. Crawling slope	Fully loaded	%	13	13	13
8	Turning radius	Min.	mm	2090	1780	1815
9	Ground clearance	Min.	mm	110	110	110
10	Stopping distance	Max.	m	2.5	2.5	2.5
11	Overall Dimension	L	mm	/	2080	2115
		W	mm	1090	1090	1138
		H	mm	2075	2075	2075
12	Weight (self)	Include battery	kg	/	2940	3090
13	Battery	Standard	V/Ah	48/420	48/420	48/420
		Optional	V/Ah	48/480	48/480	48/480
14	Motor	Driven	kW	6.8	6.8	6.8
		Lifting	kW	8.2	8.2	8.2
15	Controller	Type		MOSFET	MOSFET	MOSFET
		Manufacturer	Tow	CURTIS	CURTIS	CURTIS
			Lifting	CURTIS	CURTIS	CURTIS
16	Tyre	Front ×2		6.00-9/2	6.00-9/2	21×8/2
		Rear ×2		5.00-8/2	5.00-8/2	5.00-8/2

Parameters of CPD10/15/18JD1

NO.	Item		Unit	CPD10JD1	CPD15JD1	CPD18JD1
1	Ratio capacity		kg	1000	1500	1800
2	Load centre		mm	500	500	500
3	Lifting height	Max.	mm	3000	3000	3000
		Free	mm	135	135	135
4	Max. Lifting velocity	Fully loaded	mm/s	290	290	270
5	Tilting angle	front/rear	°	5/10	5/10	5/10
6	Max. Traveling velocity	Fully loaded	mm/s	12	12	12
7	Max. Crawling slope	Fully loaded	%	13	13	13
8	Turning radius	Min.	mm	2090	1780	1815
9	Ground clearance	Min.	mm	110	110	110
10	Stopping distance	Max.	m	2.5	2.5	2.5
11	Overall Dimension	L	mm	/	2080	2115
		W	mm	1090	1090	1138
		H	mm	2075	2075	2075
12	Weight (self)	Include battery	kg	/	2940	3090
13	Battery	Standard	V/Ah	48/420	48/420	48/420
		Optional	V/Ah	48/480	48/480	48/480
14	Motor	Driven	kW	8	8	6.8
		Lifting	kW	7.8	7.8	8.2
15	Controller	Type		MOSFET	MOSFET	MOSFET
		Manufacturer	Tow	Danaher	Danaher	CURTIS
			Lifting	Danaher	Danaher	CURTIS
16	Tyre	Front ×2		6.00-9/2	6.00-9/2	21×8/2
		Rear ×2		5.00-8/2	5.00-8/2	5.00-8/2

Parameters of CPD20/25/30J

No.	Item		Unit	CPD20J	CPD25J	CPD30J
1	**Ratio capacity**		kg	2000	2500	3000
2	Load centre		mm	500	500	500
3	Lifting height	Max.	mm	3000	3000	3000
		Free	mm	140	145	145
4	Max. Lifting velocity	Fully loaded	mm/s	250	250	230
5	Tilting angle	front/rear	°	5/10	5/10	5/10
6	Max. Traveling velocity	Fully loaded	mm/s	12	12	13
7	Max. Crawling slope	Fully loaded	%	13	10	13
8	Turning radius	Min.	mm	2090	2090	2230
9	Ground clearance	Min.	mm	120	120	120
10	Stopping distance	Max.	m	2.5	2.5	2.5
11	Overall Dimension	L	mm	2275	2325	2490
		W	mm	1265	1265	1240
		H	mm	2100	2100	2100
12	Weight (self)	Include battery	kg	3800	4020	5050
13	Battery	Standard	V/Ah	48/630	48/630	80/500
		Optional	V/Ah	48/700	48/700	/
14	Motor	Driven	kW	7	7	10
		Lifting	kW	8.6	8.6	10
15	Controller	Type		MOSFET	MOSFET	MOSFET
		Manufacturer	Tow	CURTIS	CURTIS	CURTIS
			Lifting	CURTIS	CURTIS	CURTIS
16	Tyre	Front ×2		23×9-10/2	23×9-10/2	23×9-10/2
		Rear ×2		18×7-8/2	18×7-8/2	18×7-8/2

Parameters of CPD20/25/30/35JC1

No.	Item		Unit	CPD20JC1	CPD25JC1	CPD30JC1	CPD35JC1
1	Ratio capacity		kg	2000	2500	3000	3500
2	Load centre		mm	500	500	500	500
3	Lifting height	Max.	mm	3000	3000	3000	3000
		Free	mm	140	145	145	145
4	Max. Lifting velocity	Fully loaded	mm/s	250	250	230	210
5	Tilting angle	front/rear	°	5/10	5/10	5/10	5/10
6	Max. Traveling velocity	Fully loaded	mm/s	12	12	13	13
7	Max. Crawling slope	Fully loaded	%	13	10	13	12
8	Turning radius	Min.	mm	2090	2090	2230	2310
9	Ground clearance	Min.	mm	120	120	120	120
10	Stopping distance	Max.	m	2.5	2.5	2.5	2.5
11	Overall Dimension	L	mm	2275	2325	2490	2570
		W	mm	1265	1265	1265	1302
		H	mm	2100	2100	2100	2100
12	Weight (self)	Include battery	kg	3800	4020	5050	5400
13	Battery	Standard	V/Ah	48/630	48/630	80/500	80/500
		Optional	V/Ah	48/700	48/700	/	/
14	Motor	Driven	kW	9.1	9.1	11.75	11.75
		Lifting	kW	8.6	8.6	10	10
15	Controller	Type		MOSFET	MOSFET	MOSFET	MOSFET
		Manufacturer	Tow	CURTIS	CURTIS	CURTIS	CURTIS
			Lifting	CURTIS	CURTIS	CURTIS	CURTIS
16	Tyre	Front ×2		23×9-10/2	23×9-10/2	23×9-10/2	23×10-12/2
		Rear ×2		18×7-8/2	18×7-8/2	18×7-8/2	18×7-8/2

Parameters of CPD20/25/30/35JC2

No.	Item		Unit	CPD20JC2	CPD25JC2	CPD30JC2	CPD35JC2
1	Ratio capacity		kg	2500	2500	3000	3500
2	Load centre		mm	500	500	500	500
3	Lifting height	Max.	mm	3000	3000	3000	3000
		Free	mm	145	145	145	145
4	Max. Lifting velocity	Fully loaded	mm/s	250	250	230	210
5	Tilting angle	front/rear	°	5/10	5/10	5/10	5/10
6	Max. Traveling velocity	Fully loaded	mm/s	12	12	13	13
7	Max. Crawling slope	Fully loaded	%	10	10	13	12
8	Turning radius	Min.	mm	2090	2090	2230	2310
9	Ground clearance	Min.	mm	120	120	120	120
10	Stopping distance	Max.	m	2.5	2.5	2.5	2.5
11	Overall Dimension	L	mm	2325	2325	2490	2570
		W	mm	1265	1265	1265	1302
		H	mm	2100	2100	2100	2100
12	Weight (self)	Include battery	kg	4020	4020	5050	5400
13	Battery	Standard	V/Ah	48/630	48/630	80/500	80/500
		Optional	V/Ah	48/700	48/700	/	/
14	Motor	Driven	kW	9.1	9.1	11.75	11.75
		Lifting	kW	**8.6**	8.6		
15	Controller	Type		MOSFET	MOSFET	MOSFET	MOSFET
		Manufacturer	Tow	CURTIS	CURTIS	CURTIS	CURTIS
			Lifting	CURTIS	CURTIS	CURTIS	CURTIS
16	Tyre	Front ×2		23×9-10/2	23×9-10/2	23×9-10/2	23×10-12/2
		Rear ×2		18×7-8/2	18×7-8/2	18×7-8/2	18×7-8/2

Parameters of CPD20/25/30/ 35J D1

No.	Item		Unit	CPD20J D1	CPD25J D1	CPD30J D1	CPD35J D1
1	Ratio capacity		kg	2000	2500	3000	3500
2	Load centre		mm	500	500	500	500
3	Lifting height	Max.	mm	3000	3000	3000	3000
		Free	mm	140	145	145	145
4	Max. Lifting velocity	Fully loaded	mm/s	250	250	250	210
5	Tilting angle	front/rear	°	5/10	5/10	5/10	5/10
6	Max. Traveling velocity	Fully loaded	mm/s	14	12	14.5	13
7	Max. Crawling slope	Fully loaded	%	14	13	15	11
8	Turning radius	Min.	mm	2040	2090	2230	2310
9	Ground clearance	Min.	mm	120	120	120	120
10	Stopping distance	Max.	m	2.5	2.5	2.5	2.5
11	Overall Dimension	L	mm	2275	2325	2490	2570
		W	mm	1265	1265	1265	1302
		H	mm	2100	2100	2100	2100
12	Weight (self)	Include battery	kg	3800	4180	5050	5460
13	Battery	Standard	V/Ah	48/630	48/630	80/500	80/500
		Optional	V/Ah	48/700	48/700	/	/
14	Motor	Driven	kW	10.5	10.5	10.6	10.6
		Lifting	kW	11	11	12.8	12.8
15	Controller	Type		MOSFET	MOSFET	MOSFET	MOSFET
		Manufacturer	Tow	Danaher	Danaher	Danaher	Danaher
			Lifting	Danaher	Danaher	Danaher	Danaher
16	Tyre	Front ×2		23×9-10/2	23×9-10/2	23×9-10/2	23×10-12/2
		Rear ×2		18×7-8/2	18×7-8/2	18×7-8/2	18×7-8/2

Parameter of CPD40/45/50J D1

No.	Item		Unit	CPD40J D1	CPD45J D1	CPD50J D1
1	**Ratio capacity**		kg	4000	4500	5000
2	Load centre		mm	500	500	500
3	Lifting height	Max.	mm	3000	3000	3000
		Free	mm	145	150	150
4	Max. Lifting velocity	Fully loaded	mm/s	260	260	230
5	Tilting angle	front/rear	°	6/12	6/12	6/12
6	Max. Traveling velocity	Fully loaded	mm/s	13.5	13.5	13
7	Max. Crawling slope	Fully loaded	%	14	14	13
8	Turning radius	Min.	mm	2650	2650	2650
9	Ground clearance	Min.	mm	219	219	226
10	Stopping distance	Max.	m	2.5	2.5	2.5
11	Overall Dimension	L	mm	3015	3015	3015
		W	mm	1380	1380	1380
		H	mm	2280	2280	2280
12	Weight (self)	Include battery	kg	6550	6800	7250
13	Battery	Standard	V/Ah	80/700	80/700	80/700
		Optional	V/Ah	/	/	/
14	Motor	Driven	kW	16.6	16.6	16.6
		Lifting	kW	25.4	25.4	25.4
15	Controller	Type		MOSFET	MOSFET	MOSFET
		Manufacturer		Danaher	Danaher	Danaher
16	Tyre	Front ×2		250-15-16/2	250-15-16/2	250-15-16/2
		Rear ×2		7.00-12-12/2	7.00-12-12/2	7.00-12-12/2

Parameter of CPD40/45/50J C2

No.	Item		Unit	CPD40J C2	CPD45J C2	CPD50J C2
1	**Ratio capacity**		kg	4000	4500	5000
2	Load centre		mm	500	500	500
3	Lifting height	Max.	mm	3000	3000	3000
		Free	mm	145	150	150
4	Max. Lifting velocity	Fully loaded	mm/s	260	260	260
5	Tilting angle	front/rear	°	6/12	6/12	6/12
6	Max. Traveling velocity	Fully loaded	mm/s	13.5	13.5	13
7	Max. Crawling slope	Fully loaded	%	14	14	13
8	Turning radius	Min.	mm	2650	2650	2650
9	Ground clearance	Min.	mm	219	219	226
10	Stopping distance	Max.	m	2.5	2.5	2.5
11	Overall Dimension	L	mm	3015	3015	3015
		W	mm	1380	1380	1380
		H	mm	2310	2310	2310
12	Weight (self)	Include battery	kg	6550	6800	7200
13	Battery	Standard	V/Ah	80/700	80/700	80/700
		Optional	V/Ah	/	/	/
14	Motor	Driven	kW	16.6@3100rpm	16.6@3100rpm	16.6@3100rpm
		Lifting	kW	25.4@1620 rpm	25.4@1620 rpm	25.4@1620 rpm
15	Controller	Type		MOSFET	MOSFET	MOSFET
		Manufacturer		CURTIS	CURTIS	CURTIS
16	Tyre	Front ×2		250-15-16/2	250-15-16/2	250-15-16/2
		Rear ×2		7.00-12-12/2	7.00-12-12/2	7.00-12-12/2

14.Scutcheon

There are many scutcheons and labels on the different position of the truck.

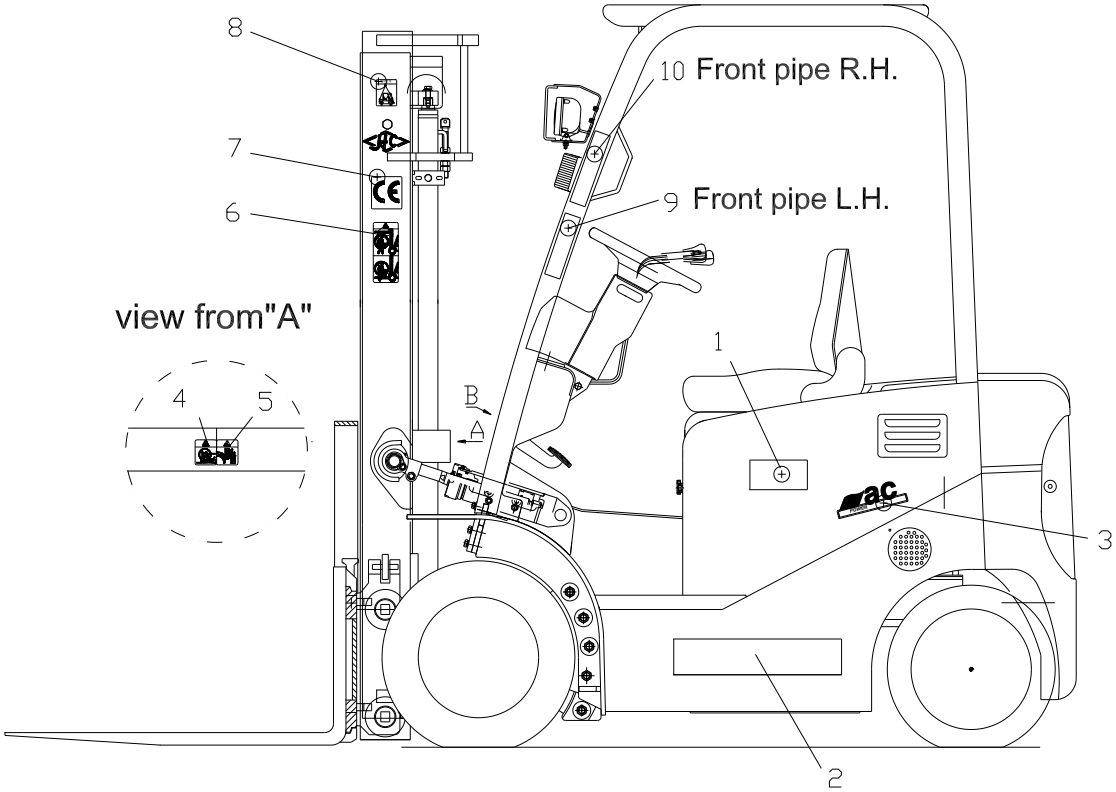

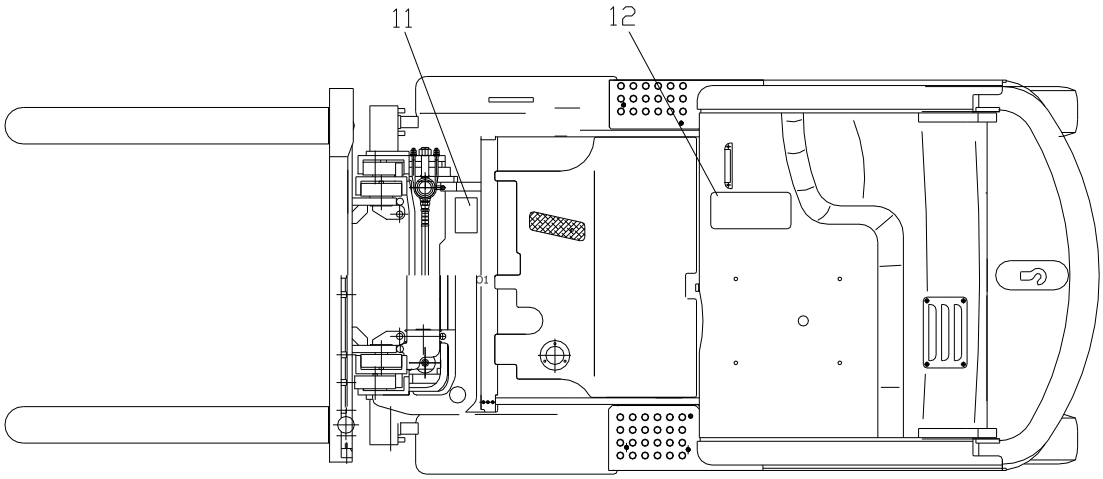

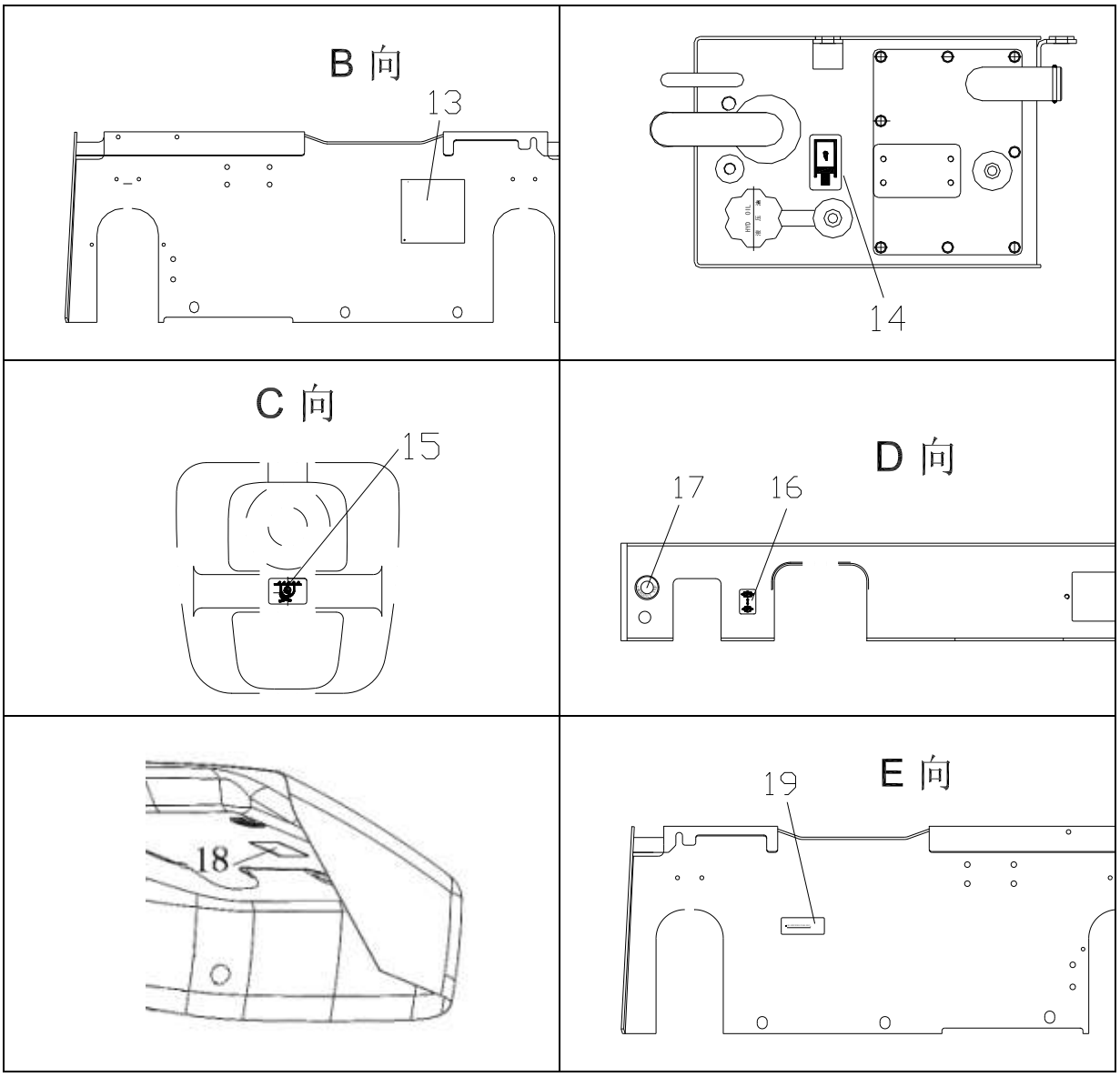

1.tonnage label	2. typeface label	3. ac label	4. danger label
5.danger label	6. danger label	7. CE label	8. hanging label
9. danger label	10. danger label	11. load curve scutcheon	12. warning label
13. product nameplate	14. hydraulic oil label	15.tight point label	16.hand brake label
17. urgent stop label	18. noise label	19.fuse label	

1、tonnage label

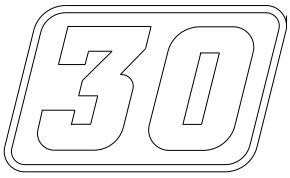

The word “30”means the rated load is 3.0 ton. If the lifting height increases or adds attachment, the rated load will decrease.

2、typeface label

HANGCHA

3、ac label（only fro ac motor）

4、danger label （NO entering label）

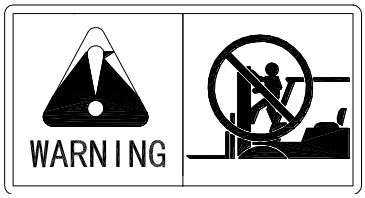

Warning: It is dangerous of your life. If the body is clamped among the mast , instrument frame and shield cabane, your life will be dangerous. If the part needs to be check or repaired, the inspection and repair should be carried out after shutting off the power. Nobody is allowed on the truck, and the man outside the truck is not allowed to operate the truck, preventing from accident caused by miss operating the mast handle.

5、danger label

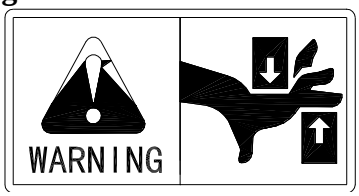

The inner and outer mast, fork frame are all lifting slip parts. The hands are not allowed to reach the place between the inner and outer mast.

If the part needs to be check or repaired, the inspection and repair should be carried out after shutting off the power. Nobody is allowed on the truck, and the man outside the truck is not allowed to operate the truck, preventing from accident caused by miss operating the mast handle.

6、danger label： adhibit to the outside of mast

No allowed to stand on or down the mast, or it is dangerous to your life.

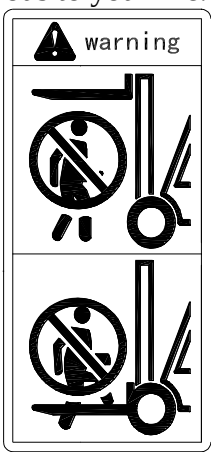

7、CE label（only for truck exporting to Europe or option）

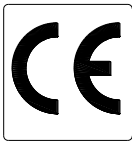

8、hang label： It shows the hang position and method. When hanging, the rope should not touch the light and even destroy it.

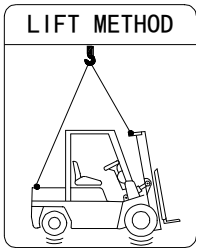

9、10 danger label

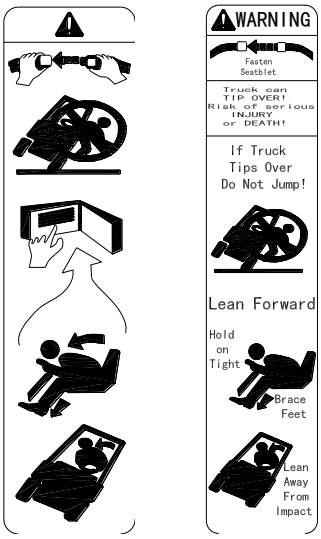

11、load curve scutcheon

It shows relation among the position of the load center, max. load and max. lifting height.

If it has side moving and attachment, the load decreases. If the lifting height increases, the load decreases. Before loading, check whether the load and the center distance of load are in the allowed range show in the diagram of load capacity. If the shape of load is complicated, make the most heavy part place in the center of the fork and approach the stop fork frame.

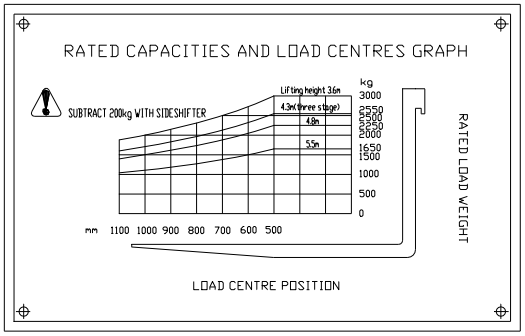

12、warning label

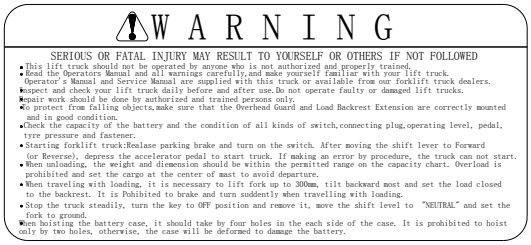

WARNING

SERIOUS OR FATAL INJURY MAY RESULT TO YOURSELF OR OTHERS IF NOT FOLLOWED

- This lift truck should not be operated by anyone who is not authorized and properly trained.
- Read the Operators Manual and all warnings carefully,and make yourself familiar with your lift truck. Operator's Manual and Service Manual are supplied with this truck or available from our forklift truck dealers.
- Inspect and check your lift truck daily before and after use.Do not operate faulty or damaged lift trucks.
- Repair work should be done by authorized and trained persons only.
- To protect from falling objects,make sure that the Overhead Guard and Load Backrest Extension are correctly mounted and in good condition.
- Check the capacity of the battery and the condition of all kinds of switch,connecting plug,operating level, pedal, tyre pressure and fastener.
- Starting forklift truck:Realase parking brake and turn on the switch. After moving the shift lever to Forward (or Reverse), depress the accelerator pedal to start truck. If making an error by procedure, the truck can not start.
- When unloading, the weight and diemension should be within the permitted range on the capacity chart. Overload is prohibited and set the cargo at the center of mast to avoid departure.
- When traveling with loading, it is necessary to lift fork up to 300mm, tilt backward most and set the load closed to the backrest. It is Pohibited to brake and turn suddently when travelling with loading.
- Stop the truck steadily, turn the key to OFF position and remove it, move the shift level to "NEUTRAL" and set the fork to ground.
- When hoisting the battery case, it should take by four holes in the each side of the case. It is prohibited to hoist only by two holes, otherwise, the case will be deformed to damage the battery.

13、product nameplate

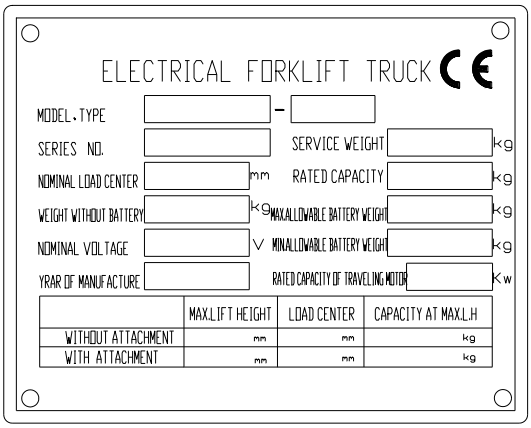

14、hydraulic oil label

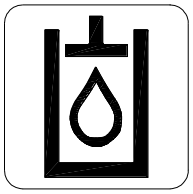

15、tight point label（only for truck exporting to Europe or option）

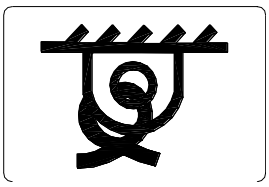

16、hand brake label（only for truck exporting to Europe or option）

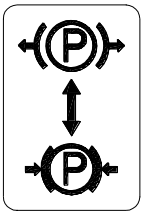

17、urgent stop label

18、noise label（only for truck exporting to Europe or option）

19、fuse label（only for truck exporting to Europe or option）

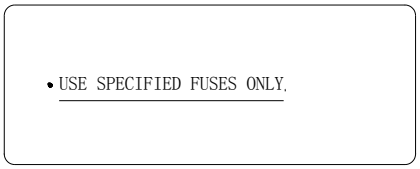

15.The use, assembly and safe rules of attachment

HANGCHA will choose attachment that according with International standard ISO2328《Forklift pothook fork and install size of carriage》,such as clamp, rotator, paper roll clamp, carrying ram, side-shifter ect.

1、Attachment use.

（1） Know well the content of nameplate on attachment, read the instruction manual before Usage.(Especially the manual from attachment company)Before operate the attachment, the people should be trained and obtain the qualification.

(2) It should be understand the basic capability and operate methods of attachment. Especially the admit load, lift height, size of cargo and adapt range of attachment.

（3）Operate the multi-functional attachment, such as with side-shifter, clamp or rotator, it is not allowed that two action at one time. Operate one functional then do another one.

（4）Prohibit the cargo at a high position when truck move with attachment. If the size of cargo is too big, prohibit the truck move on. Transport the cargeo, make sure that the distance of bottom of cargo and ground is less than 300mm and mast incline back.

（5）The weight of cargo couldn’t exceed the limited value of combination carrying capacity of forklift and attachment. It is not allowed that partial load at high position. It is a short time work for attachment with side-shifter. Partial load is around 100mm (Above 5 ton (including 5 ton),the side-shifter movable within 300mm.

（6）In the range of the projection forth 2m of the lower of attachment and cargo, prohibit stand to avoid the suddenness except the driver position under overhead.

（7）It is not allowed that an emergency brake in moving. Run slowly with load.

（8）Prohibit outside force when attachment working.

（9）It couldn’t be use at malfeasance situation and overstep normal work range

（10）When the attachment failure, prohibit use without check.

Check and maintenance:

（1）Check the clearance of carriage beam and below catch of attachment if accord the attachment manual.

（2）Check the rise catch is right on the flute of fork carriage.

（3）Use the auto currency lithic-grease per 500 hours to bearing surface.

（4）If the tighten firmware become flexible.

（5）Check the tie-in of hydraulic pressure loop, if tube attaint. Prohibit use after repair.

（6）Check the drive of attachment timing or turn the component if fray or block, change betimes.

（7）Check each element if in normal under load attachment is work in gear. If not, check the hydraulic pressure loop, find out the broken part, change air poof or whole loop part.

2、Attachment assembly

！Caution

1、Untempered technology licence of our company, any refit at safety and capability to attachment is strict prohibit.

2、Fact rating load capacity should be the least of rating load capacity, the load capacity of attachment, colligate load capacity of truck. Generally speaking, the colligate load capacity of truck is the least. Attachment load capacity just a count value of attachment pressure.

3、Assembly go to in reason, credibility, safety to avoid the attachment glide around carriage in using.

4、After hang attachment, embed the rise catch block to the gap of top beam, let the offset of centre line of attachment and carriage is less than 50mm.Otherwise,it will be affect the landscape orientation stability of forklift.

5、To these attachment with rotating function, such as paper roll clamp, bale clamp, muti-purpose clamp, drum clamp, it needs to weld chock block in the joint of carriage beam and attachment to prevent move from side to side in the operation.

6、Assembly the attachment of below catch orientation, it need to adjust the clearance between below catch and beam of carriage.

16.Related safety instruction and standard (for trucks exporting to Europe or option)

The model by CE certification which according to the following instruction and standard: DIRECTIVE 2006/42/EC OF THE EUROPEAN PAMENT AND OF THE COUNCIL, DIRECTIVE 2000/14/EC OF THE EUROPEAN PAMENT AND OF THE COUNCIL, EN1726-1:1998(Engineering Industry truck safety standardize), EN12053:2001, EN1175-1:1998, EN13059:2002 coordinate standard.

- Main safety factor will be according with DIRECTIVE 2006/42/EC OF THE EUROPEAN PAMENT AND OF THE COUNCIL and EN1726-1:1998、EN1175-1:1998 standard.
- The design and manufacture of electrical element comply with the low voltage standard 2006/95/EC.
- Noise will be according with EN12053:2001 and 2000/14/EC.
- Vibration parameters are measured according to standards of ISO5349-2:2001, EN13059:2002, ISO2631-1:1997, and the result meets the requirement of 2002/44/EC.
- Electromagnetism compatibility is measured according to standard of EN12895:2000， and meets the requirement of 2004/108/EC.

浙江杭叉工程机械集团股份有限公司
Zhejiang Hangcha Engineering Machinery Co.,Ltd.
地址：杭州市石桥路 398 号　邮编：310022　Website: http//www.zjhc.cn
Add: 398 Shi Qiao Road, Hangzhou 310022　E-Mail: sales@zjhc.cn
Tel：+86-571-88926666　Fax： +86-571-88144682

EC DECLARATION OF CONFORMITY

MANUFACTURE

Name: Zhejiang Hangcha Engineering Machinery Co., Ltd.
Address: 398 Shiqiao Road, Hangzhou 310022, P. R. China

THE TECHNICAL DOCUMENTATION WAS COMPILED BY:

Name:
Address:
Post:

HEREBY DECLARES THAT THE PRODUCT DESCRIBED BELOW:

Description: Industrial truck –Battery counterbalanced forklift truck with charger
Name: Electrical forklift truck
Model:
Serial number: Rated power: kW
Manufacturing year:

COMPLIES WITH THE PROVISIONS OF THE FOLLOWING EUROPEAN DIRECTIVES:

2006/42/EC Machinery Directive
2004/108/EC EMC Directive
2006/95/EC LVD Directive

COMPLIES WITH THE PROVISIONS OF THE FOLLOWING HARMONIZED STANDARDS:

EN 1726-1:1998 +A1:2003	Safety of industrial trucks—Self-propelled trucks up to and including 10 000 kg capacity and industrial tractors with a drawbar pull up to and including 20 000 N— Part 1：General requirements
EN1175-1:1998	Safety of industrial trucks—Electrical requirements—Part 1：General requirements for battery-powered trucks.
Annex I of Machinery Directive 2006/42/EC	Essential health and safety requirements relating to the design and construction of machinery

Done at (place): ZHEJIANG HANGCHA ENGINEERING MACHINERY CO.,LTD.
On (date):

Name of the signatory:
Title: Technical Director
Signature: _____

17.Maintenance record

Date	Maintain content	Maintainer

HANGCHA GROUP CO. , LTD.

- Address for: OVERSEAS USERS
- Manufacturing site: 88 Donghuan Road, LinAn Econimic Development zone, Zhejiang, P.R.China ■ ZIP:311305
- Registered Address：398 Shi Qiao Road, Hangzhou, P.R. China) ■ ZIP :310004
- Fax: 0086-571-88926789,0086-571-88132890
- **Web: http://www.hcforklift.com**
- **E-mail: sales@hcforklift.com**