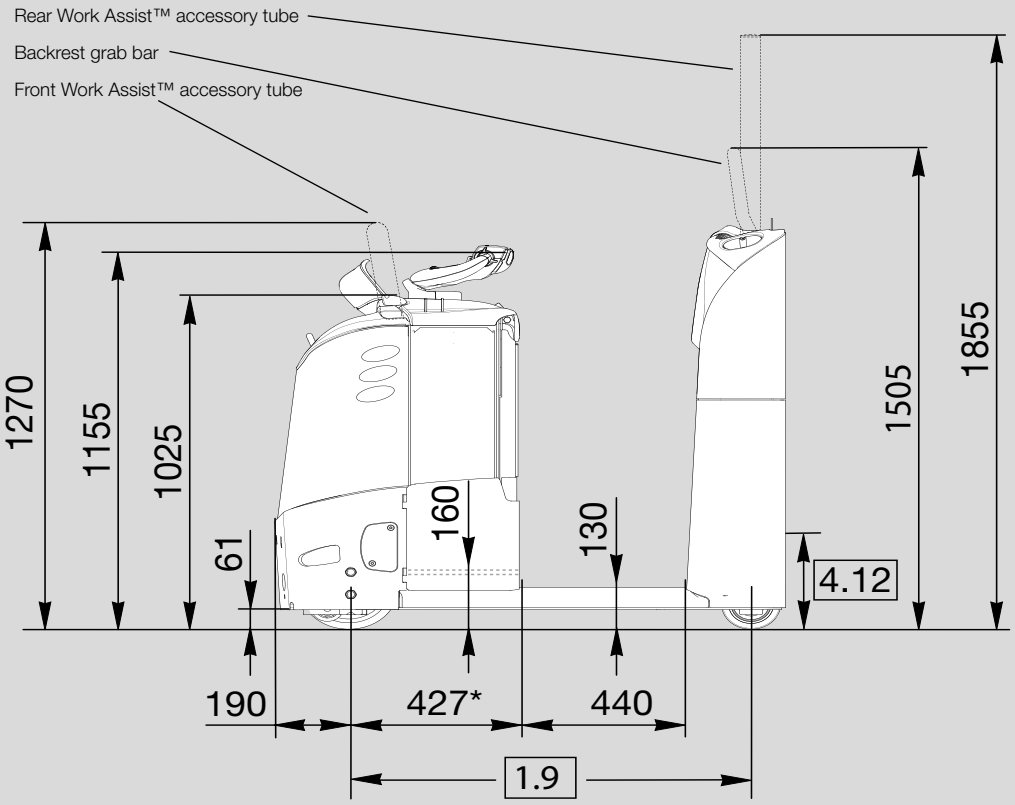

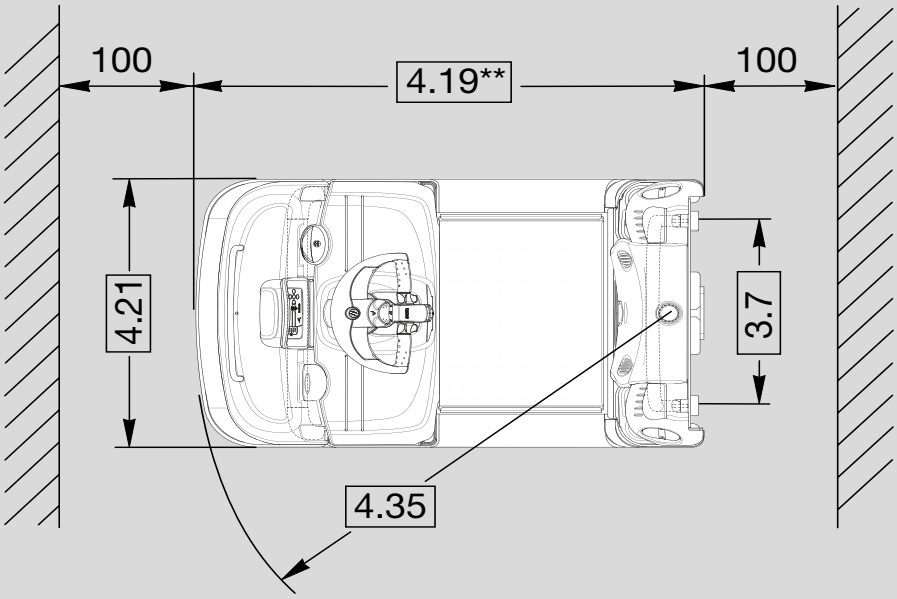

* Large battery compartment = 547 mm
** Overall length without coupler

Destinguishing Mark	1.1	**Manufacturer**	Crown Equipment Corporation				
	1.2	**Model**				TC 3000-3.0	
	1.3	**Power Source**				electric	
	1.4	**Operator Type**				stand-on	
	1.5	**Rated Capacity**		Q	kg	3000	
	1.7	**Drawbar Pull**		F	N	800	
	1.9	**Wheelbase**		y	mm	1030	1150
Weight	2.1	**Service Weight**	less battery		kg	590	630
	2.2	**Axle Load**	with load, front/rear		kg	595 / 380	690 / 440
Tyres/Wheels/Chassis	3.1	**Tyres**				Vulkollan	
	3.2	**Tyre Size**	front		mm	Ø 250 x 75	
	3.3		rear		mm	Ø 150 x 100	
	3.4	**Additional Wheels**	optional		mm	Ø 60 x 82	
	3.5	**Wheels**	number front/rear (x = driven wheels)		mm	1x / 2	
	3.6	**Tread**	front	b10	mm	central position	
	3.7		rear	b11	mm	563	
Dimensions	4.8	**Seat Height relating to SIP/Stand Height**		h7	mm	130	
	4.9	**Height Control Handle in Driving Position**		h14	mm	1160	
	4.12	**Coupler Height**		h10	mm	see couplers	
	4.19	**Overall Length**	without coupler	l1	mm	1310	1430
	4.21	**Overall Width**		b1	mm	810	
	4.32	**Ground Clearance**	centre wheelbase	m2	mm	61	
	4.35	**Turning Radius**		Wa	mm	1220	1340
Performance Data	5.1	**Travel Speed**	with/without load, power unit first		km/h	8.5 / 12.5	8.0 / 12.5
	5.6	**Max. Drawbar Pull**			N	3250	
	5.7	**Gradeability**			%	see chart Gradeability (next page)	
	5.10	**Service Brake**				electric	
Electric Motor	6.1	**Traction Motor**	rating at S2 60 min.		kW	4.0	
	6.3	**Max. Battery Box Size**	DIN 43531	l x w x h	mm	210x790x784	330x790x784
	6.4	**Battery Voltage**	nominal capacity K5		V/Ah	24/420-465	24/560-620
	6.5	**Battery Weight**			kg	349 - 402 (465 - 534)	465 - 534
	8.1	**Drive Unit**				Transistor	

Couplers

coupler heights min./max.

Automatic
128/365 mm

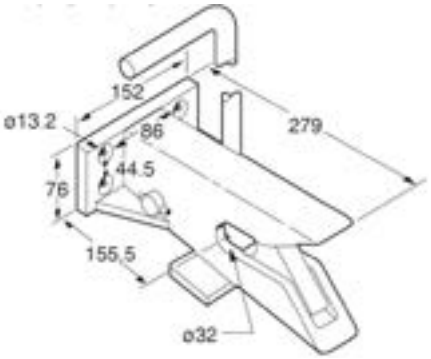

Towing eyelet
143/365 mm

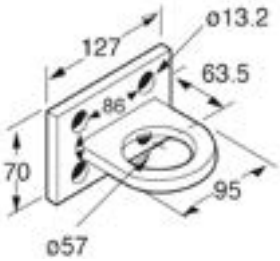

Mounting plate allows all types of couplers to be adjusted in 45 mm increments (Rockinger RO 244 in 55 mm increments)

coupler heights min./max.

Rockinger RO 244
120/340 mm

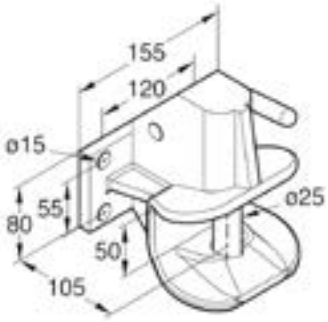

Tension bolt
115/388 mm

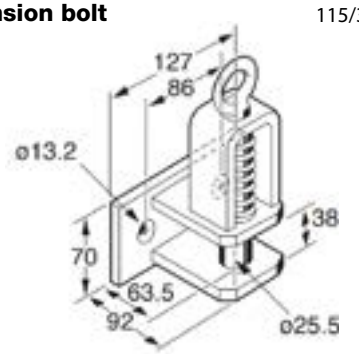

Towing hook
143/365 mm

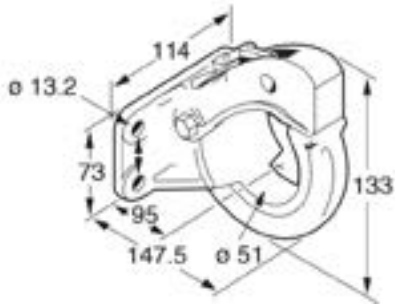

Gradeability Diagram

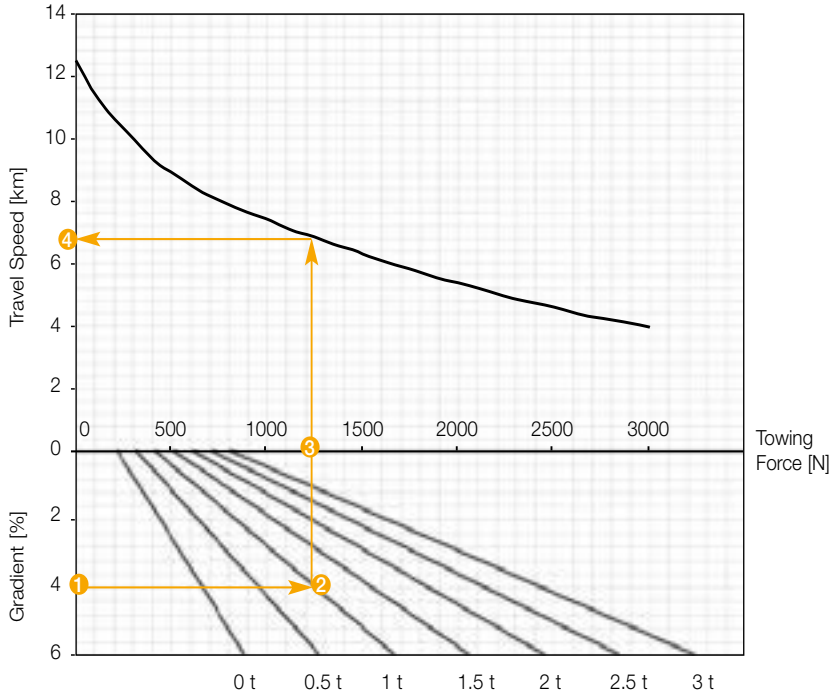

Example Calculation

The example shows that at a gradient of 4% (1) with a load of 1 ton (2) the TC 3000 has to apply 1250 N (3) towing force and will achieve a travel speed of 6.8 km/h. (4)
Maximum continuous towing force is 800 N.
Trailers with a braking system are recommended for gradients more than 4 %.

Electric System/Batteries
24-volt electrical system with nominal battery capacities from 420 Ah up to 620 Ah. The battery can be removed vertically or horizontally with optional battery rollers for left/right or both sides removal.

Standard Equipment
1. Crown maintenance-free 3-phase (AC) traction motor. Maintenance-free 3-phase (AC) steering motor.
2. e-Gen® Braking System offers regenerative and frictionless electric braking (Mechanical braking applies only as parking brake)
3. Electronic steering with the centre-mounted X10® Handle for precise and effortless control
4. The self-centering X10 Handle places all truck functions at the operator's fingertips
5. Crown Access 1 2 3® Comprehensive System Control
6. Intelligent Steering System slows the travel speed in curves
7. Crown's Information Display
   - 1 line LC-Display with 8 characters
   - Battery discharge indicator
   - Keyless start up with PIN code
   - Start up and run time diagnostics
   - 3 selectable traction performance profiles
   - Hour meters including traction motor and run time
   - Access 1 2 3® on-board diagnostic with real time troubleshooting capabilities
8. CAN-Bus technology
9. Ramp hold
10. Low step height of 130 mm with a 440 mm wide walk-through area
11. Comfort plus suspended floorboard with a non-slip anti-fatigue floor mat with integrated presence sensors
12. Electric power disconnect plug
13. Multiple storage compartments
    - Large front storage tray
    - Large storage compartments in the backrest
    - 2 large storage bins in the backrest
    - 3 storage pockets in battery area
14. Two cords on each side of desktop surface to fix paper documents
15. Vulkollan drive tyre and load wheels with additional rounded skid bars
16. Soft contoured backrest with cushioned soft kneepad
17. Battery connector DIN 160 A
18. Heavy-duty power unit
    - 10 mm thick steel skirt
    - Easily removable reinforced steel covers
    - Top battery access

Optional Equipment
1. Additional wheels Ø 60 x 82 mm instead of skid bars
2. Backrest grab bar
3. Adjustable fold-down lean seat
4. Hitch Position Control in backrest
5. Battery roll out for left/right or both sides
6. SBE 160 red battery connector
7. 12/24 V power supply for electronic tools
8. Cold storage conditioning
9. Front Work Assist™ accessory tube with or without cable management
10. Rear Work Assist™ accessory tube
11. Work Assist™ Accessories
    - Load tray
    - Foil roll holders
    - Storage pockets
    - Beverage holder
    - Trash bag holder
    - Scan gun holder
    - Small, medium and large clip boards
    - Mounting brackets for WMS terminals
12. Rear storage compartment
13. Audible travel alarm
14. Flashing beacon
15. Warning light
16. Rubber bumper
17. Key switch
18. Key pad
19. Special paint
20. InfoLink® Ready
21. Supertrac drive tyre Ø 250 x 75 mm
22. Lithium-Ion Battery Ready
23. Soft writing mat
24. Universal magnetic storage tray
25. Central storage tray
26. Folding step
27. QuickPick® Remote Ready
28. USB Charging Port

Electrical
24 Volt electrical system managed by Crown's Access 1 2 3® Comprehensive System Control. Virtually maintenance-free AC traction motor provides strong acceleration and control at any speed. Sensors monitor functional parameters including steering, speed and operator position and adjust operational settings automatically to suit conditions.

Power Unit
The rugged power unit is designed for tough real-world applications. A 10 mm thick skirt protects drive unit and caster components while reinforced steel covers and doors cover all electronics. The uncluttered layout of components provides quick and easy access for servicing.

Operator Area and Controls
The comfort plus suspension features a fully suspended floorboard with a soft mat that reduces operator fatigue. Wide walk-through compartment with rounded surfaces provides a convenient shortcut even while carrying boxes. Contoured lean pad helps the operator stay centred in the truck while providing a soft contact surface to lean against. Multiple storage pockets provide locations for tools and personal effects.

All truck functions are controlled by the award-winning X10 Handle that allows simultaneous operation of all functions with one hand. Electronic steering is standard, providing precise, predictable control.
A large information display provides battery discharge level, operational status and service messages to the operator.

Access 1 2 3® Comprehensive System Control
Crown's Access 1 2 3® technology provides optimum performance and control by offering a communications interface for the operator and service engineer, intelligent coordination of truck systems and simplified service with advanced diagnostics.

The display includes a full featured on-board service tool so service technicians can actively view inputs and outputs during truck operation. No laptop or service terminal is required. Performance tuning can be accessed at the display to customise truck performance for specific applications or operator requirements.

e-GEN® Braking System
The power of the high-torque AC traction motor is used to stop the truck and keep it static until a travel input is requested, even when operating on a gradient. This system eliminates adjustments and wear points for a lifetime of maintenance-free use. An automatic parking brake activates if the truck is stopped and the operator leaves the platform or power is disconnected.

Work Assist™ Accessories
A comprehensive range of Work Assist™ accessories is available to support every kind of picking and administrative task. These rugged tools can be easily combined and positioned in the location best suited to the application and the user. Customer accessories can also be added using the universal clamp and adapter plate. Two front Work Assist™ accessory tubes are available for mounting the accessories, one with and one without cable management.

Safety Regulations
Conforms to European safety standards. Dimensions and performance data given may vary due to manufacturing tolerances. Performance is based on an average size vehicle and is affected by weight, condition of truck, how it is equipped and the conditions of the operating area. Crown products and specifications are subject to change without notice.

Crown
Gabelstapler GmbH & Co. KG
Продавец:
kupit-shtabeler.ru
+7 495 159-44-32
zakaz@kupit-shtabeler.ru

ecologic™
Clean Environment. Smart Business.

Printed on elemental chlorine free and sustainably forested paper.

ISO 9001 Quality Management System certified for the design, development, manufacture, sale and product support of industrial trucks.

Because Crown is continually improving its products,specifications are subject to change without notice.

Crown, the Crown logo, the colour beige, the Momentum symbol, X10, The X10 Handle, the stylised X10 logo, Access 1 2 3, e-Gen, InfoPoint and Work Assist are trademarks of Crown Equipment Corporation.

Copyright 2020 Crown Equipment Corporation
TC 3000 SPEC GB 12/22, 10 – M03356-006-00
Printed in Germany