C-D

3,500 - 5,500 kg Capacity

Specifications

Diesel Counterbalance Lift Truck

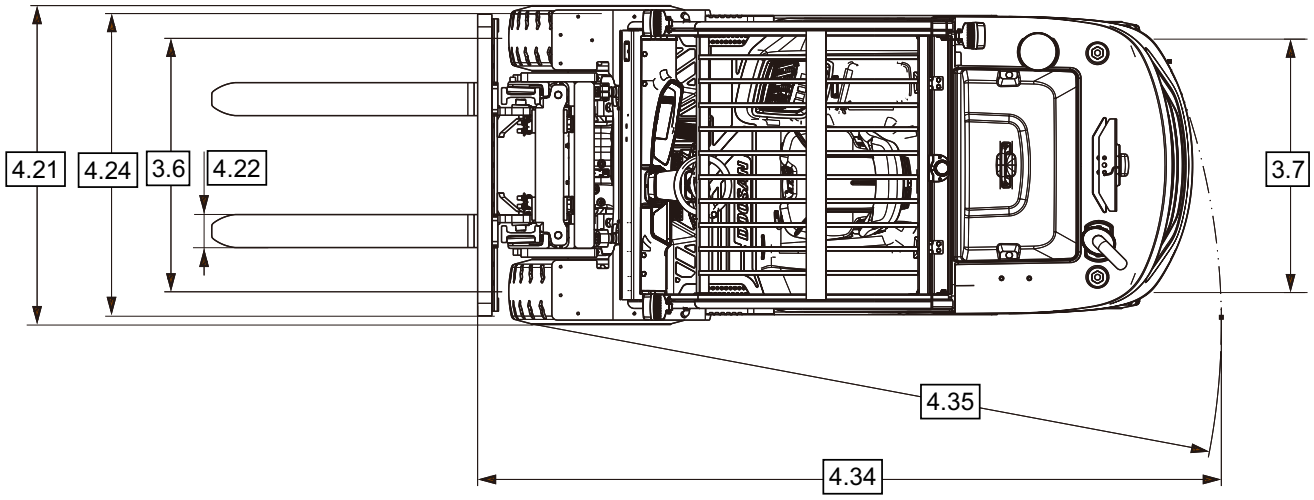
4.21
4.24
3.6
4.22
3.7
4.35
4.34

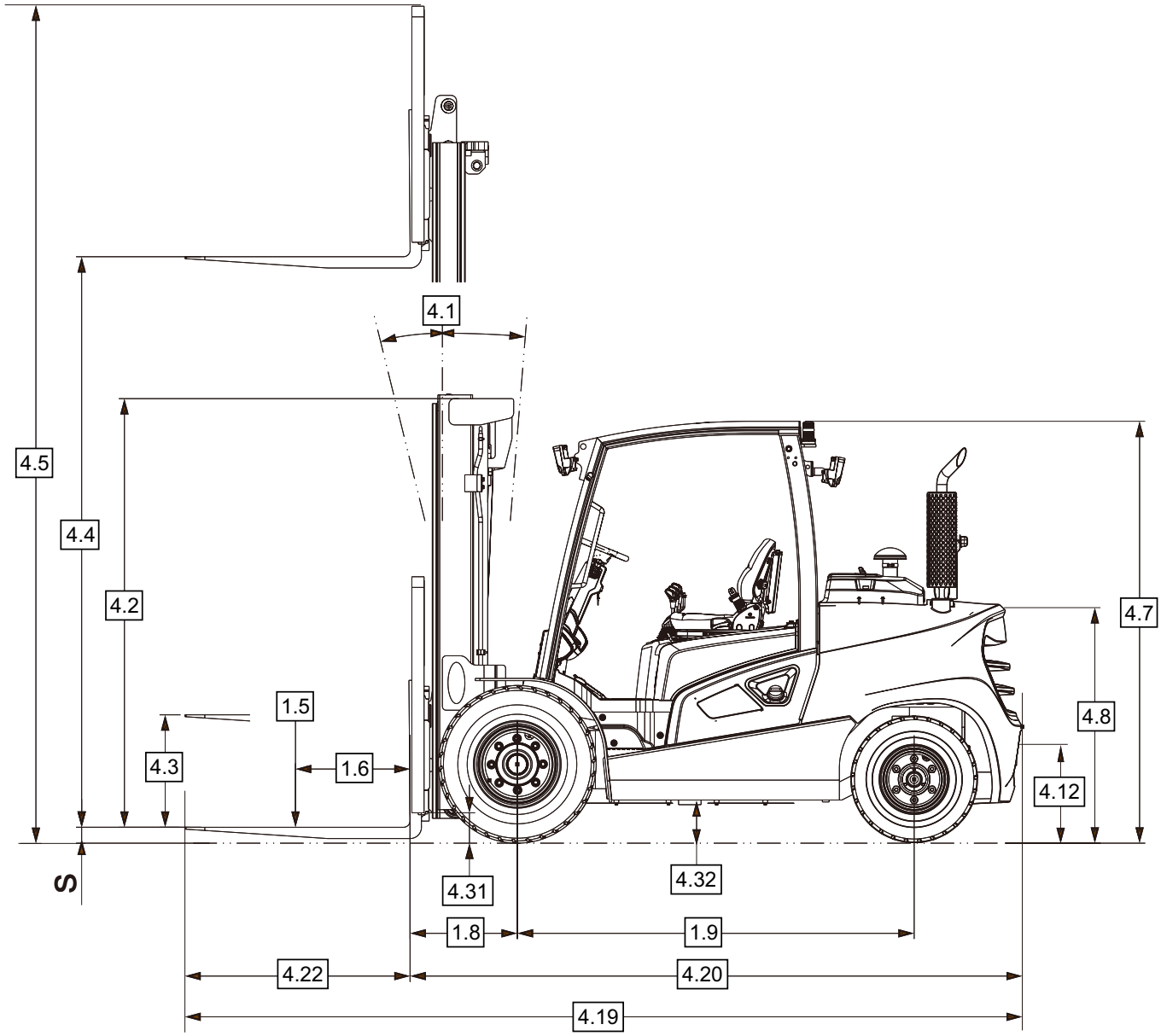
4.1
4.5
4.4
4.2
4.7
1.5
4.8
4.3
1.6
4.12
S
4.31
4.32
1.8
1.9
4.22
4.20
4.19

C-D 35-55 Series Specifications

Distinguishing Mark	1.2	**Model**				**C-D 35 S-9**	**C-D 40 S-9**	**C-D 45 S-9**	**C-D 50 C-9**	**C-D 55 C-9**	**C-D 40 SC-9**	**C-D 45 SC-9**	**C-D 50 SC-9**	**C-D 55 SC-9**
	1.3	**Power Source**	Electric, Diesel, LPG, Gasoline			Diesel			Diesel					
	1.4	**Operator Type**				Sit-down Rider Counterbalance			Sit-down Rider Counterbalance					
	1.5	**Rated Capacity**		Q	t	3.5	4.0	4.5	5.0	5.5	4.0	4.5	5.0	5.5
	1.6	**Load Centre**		c	mm	600			600		500			
	1.8	**Load Distance**	Center of wheel to fork face	x	mm	560			570		560			570
	1.9	**Wheelbase**		y	mm	2015		2115	2115		2015		2115	
Weight	2.1	**Service Weight**			kg	5795	6100	6530	6930	7300	5795	6100	6530	6930
	2.2	**Axle Load**	With load front / rear		kg	8390/905	9115/985	9960/1070	10770/1160	11565/1235	8390/905	9115/985	9960/1070	10770/1160
	2.3	**Axle Load**	Without load front / rear		kg	2255/3540	2425/3675	2630/3900	2655/4275	2705/4595	2255/3540	2425/3675	2630/3900	2655/4275
Tyres/Wheels/Chassis	3.1	**Tyres**				Pneumatic			Pneumatic					
	3.2	**Tyre Size**	Front, OD x Width x Rim Dia.		mm	8.25X15-14PR/ 7.50X16-12PR	300X15-18PR/ 7.50X16-12PR		300X15-18PR/ 7.50X16-12PR		8.25X15-14PR/ 7.50X16-12PR	300X15-18PR/ 7.50X16-12PR		
	3.3	**Tyre Size**	Rear, OD x Width x Rim Dia.		mm	7.00X12-12PR			7.00X12-14PR		7.00X12-12PR			7.00X12-14PR
	3.5	**Wheels**	Number (x=driven) front/rear			2x / 2			2x / 2					
	3.6	**Tread**	Front	b_{11}	mm	1140 / 1290	1155 / 1290		1155 / 1290		1140 / 1290	1155 / 1290		
	3.7	**Tread**	Rear	b_{12}	mm	1115			1115					
Dimensions	4.1	**Mast Tilt, Fork Carriage**	Forward / backward	α / β	°	8 / 10			8 / 10					
	4.2	**Mast Collapsed Height**		h_1	mm	2225	2230		2230		2225	2230		
	4.3	**Free-lift**		h_2	mm	160			170		160			170
	4.4	**Lift Height**		h_3	mm	3000			3050		3000			3050
	4.5	**Mast Extended Height**		h_4	mm	4265	4270	4420	4470		4265	4270	4420	4470
	4.7	**Overhead Guard Height**		h_6	mm	2225	2230	2230	2230		2225	2230		
	4.8	**Seat Height**	Relating to SIP/stand height	h_7	mm	1220	1225		1225		1220	1225		
	4.12	**Coupler Height**		h_{10}	mm	360			360					
	4.19	**Overall Length**		l_1	mm	4160	4200	4480	4530	4560	4160	4200	4480	4530
	4.20	**Head Length**	Length to fork face	l_2	mm	2995	3000	3260	3300	3340	2995	3000	3260	3300
	4.21	**Overall Width**		b_1	mm	1370	1455		1455		1370	1455		
	4.22	**Fork Dimension**	DIN ISO 2331	s/e/l	mm	50x150x1050		50x150x1200	50x150x1200		50x150x1050		50x150x1200	
	4.23	**Fork Carriage**	ISO 2328, Class/Type A		class	III A		IV A	IV A		III A		IV A	
	4.24	**Fork Carriage Width**		b_3	mm	1250		1330	1330		1250		1330	
	4.31	**Ground Clearance**	With load, below mast	m_1	mm	150	160		160		150	160		
	4.32		With load, centre wheelbase	m_2	mm	205			205					
	4.34.1	**Aisle Width**	For pallets 1000x1200 crossways	A_{st}	mm	4515	4560	4610	4640	4670	4515	4560	4610	4640
	4.34.2		For pallets 800x1200 lengthways	A_{st}	mm	4715	4760	4810	4840	4870	4715	4760	4810	4840
	4.35	**Turning Radius**		W_a	mm	2755	2800	2850	2870	2900	2755	2800	2850	2870
	4.36	**Internal Turning Radius**		b_{13}	mm	2670	2725	2775	2845	2885	2670	2725	2775	2845
Performance Data	5.1	**Travel Speed**	With load / without load		km/h	24 / 26			24 / 26					
	5.2	**Lift Speed**	With load / without load		m/s	0.56/0.60	0.55/0.60	0.54/0.60	0.53/0.60	0.52/0.60	0.56/0.60	0.55/0.60	0.54/0.60	0.53/0.60
	5.3	**Lowering Speed**	With load / without load		m/s	0.45/0.50			0.45/0.50					
	5.5	**Drawbar Pull**	With load (5 min. rating)		N	34075	33540	33564	33390	33170	34075	33540	33564	33390
	5.6	**Max. Drawbar Pull**	With load (5 min. rating)		N	37498	36894	36970	36816	36595	37498	36894	36970	36816
	5.8	**Gradeability**	With load (5 min. rating)		%	38.5	34.5	31.5	28.5	26	38.5	34.5	31.5	28.5
	5.8	**Max. Gradeability**	With load (5 min. rating)		%	43	38.5	35	31.5	29	43	38.5	35	31.5
	5.10	**Service Brake**	Service brake			Foot / Hydraulic			Foot / Hydraulic					
			Parking brake			Hand / Mechanical			Hand / Mechanical					
Combustion Engine	7.1	**Engine Manufacturer / Type**				DI			DI					
	7.2	**Engine Power according to ISO 1585**			kW	55.4			55.4					
	7.3	**Rated Speed**			min-1	2200			2200					
	7.3.1	**Torque at 1/min**			Nm/rpm	360 @ 1,400			360 @ 1,400					
	7.4	**Number of Cylinders/Displacement**			cc/cm^3	4 / 3.409			4 / 3.409					
	7.5	**Fuel Consumption as per EN 16796 (diesel)**			l/h	5.2			5.2					
	7.5.2	**CO2 equivalent as per EN 16796 (diesel)**			kg/h	17.5	18.1	19.1	19.7	20.7	17.5	18.1	19.1	19.7
	7.10	**Battery Voltage/Nominal Capacity**			V / Ah	12 / 100			12 / 100					
Add. Data	10.1	**Available Working Pressure for Attachments**			bar	160			160					
	10.2	**Oil Flow for Attachments**			l/min	110			110					
	10.4	**Fuel Tank Capacity**			l	105		119	119		105		119	
	10.7	**Sound Pressure Level at the Operator's Seat**			dB(A)	79			79					

Note: Values listed in the specification sheet have been rounded. Performance may vary due to operation conditions and / or forklift configurations.
Products and specifications are subject to change without prior notice.

Mast Chart C-D 35 S-9 / C-D 40 SC-9

Mast Type	Max. Fork Height h_3	Mast Collapsed Height h_1	Mast Extended Height h_4		Mast Free-lift Height h_2		Rated Load Capacities							
							Tilt Angle				Load Capacities			
							Single Pneumatic		Double Pneumatic		Single Pneumatic		Double Pneumatic	
			With Load Backrest	Without Load Backrest	With Load Backrest	Without Load Backrest	FWD	BWD	FWD	BWD	LC 500 mm	LC 600 mm	LC 500 mm	LC 600 mm
	mm	mm	mm	mm	mm	mm	deg	deg	deg	deg	kg	kg	kg	kg
TL	3000	2235	4260	3915	155	155	8	10	8	10	4000	3655	4000	3655
	3300	2385	4560	4215	155	155	8	10	8	10	4000	3655	4000	3655
	3650	2560	4910	4565	155	155	8	10	8	10	4000	3655	4000	3655
	4000	2885	5260	4915	155	155	8	10	8	10	4000	3655	4000	3655
	4250	3010	5510	5165	155	155	8	10	8	10	4000	3655	4000	3655
	4850	3460	6110	5765	155	155	8	10	8	10	3650	3335	3750	3430
	5250	3660	6510	6165	155	155	8	8	8	10	3200	3925	3600	3290
TF	3000	2215	4235	3800	1015	1445	8	10	8	10	4000	3655	4000	3500
TT	4000	2095	5260	4805	895	1350	8	8	8	8	4000	3660	4000	3655
	4250	2185	5525	5070	985	1435	8	8	8	8	4000	3660	4000	3660
	4500	2270	5780	5330	1070	1520	8	8	8	8	4000	3660	4000	3660
	4700	2335	5975	5520	1135	1585	8	5	8	8	4000	3660	4000	3660
	5150	2485	6425	5970	1285	1735	8	5	8	5	3700	3385	3850	3525
	5600	2635	6875	6420	1435	1885	8	3	8	3	3600	3295	3700	3385
	6050	2785	7325	6870	1585	2035	8	3	8	3	3000	2745	3550	3250
	6500	2935	7775	7320	1735	2185	8	3	8	3	2350	2150	3450	3155
	7000	3115	8275	7820	1915	2370	8	3	8	3	1750	1600	3300	3020

Mast Chart C-D 40 S-9 / C-D 45 SC-9

Mast Type	Max. Max. Fork Height h_3	Mast Collapsed Height h_1	Mast Extended Height h_4		Mast Free-lift Height h_2		Rated Load Capacities							
							Tilt Angle				Load Capacities			
							Single Pneumatic		Double Pneumatic		Single Pneumatic		Double Pneumatic	
			With Load Backrest	Without Load Backrest	With Load Backrest	Without Load Backrest	FWD	BWD	FWD	BWD	LC 500 mm	LC 600 mm	LC 500 mm	LC 600 mm
	mm	mm	mm	mm	mm	mm	deg	deg	deg	deg	kg	kg	kg	kg
TL	3000	2235	4260	3915	155	155	8	10	8	10	4500	4115	4500	4115
	3300	2385	4560	4215	155	155	8	10	8	10	4500	4115	4500	4115
	3650	2560	4910	4565	155	155	8	10	8	10	4500	4115	4500	4115
	4000	2885	5260	4915	155	155	8	10	8	10	4500	4115	4500	4115
	4250	3010	5510	5165	155	155	8	10	8	10	4500	4115	4500	4115
	4850	3460	6110	5765	155	155	8	8	8	8	4000	3655	4400	4115
	5250	3660	6510	6165	155	155	8	5	8	8	3700	3380	4250	3885
TF	3000	2215	4235	3800	1015	1445	8	10	8	10	4500	4115	4500	4115
TT	4000	2095	5260	4805	895	1350	8	8	8	8	4500	4115	4500	4115
	4250	2185	5525	5070	985	1435	8	8	8	8	4500	4115	4500	4115
	4500	2270	5780	5330	1070	1520	8	8	8	8	4500	4115	4500	4115
	4700	2335	5975	5520	1135	1585	8	5	8	8	4500	4115	4500	4115
	5150	2485	6425	5970	1285	1735	8	5	8	8	4200	3845	4300	3935
	5600	2635	6875	6420	1435	1885	8	3	8	5	3700	3385	4150	3795
	6050	2785	7325	6870	1585	2035	8	3	8	3	2900	2655	4000	3660
	6500	2935	7775	7320	1735	2185	8	3	8	3	2250	2060	3850	3525
	7000	3115	8275	7820	1915	2370	8	3	8	3	1650	1510	3700	3385

Note: Mast specifications and rated capacities are based on standard chassis equipped with Pneumatic tyre without sideshifter.

Mast Chart C-D 45 S-9 / C-D 50 SC-9

Mast Type	Max. Fork Height h_3	Mast Collapsed Height h_1	Mast Extended Height h_4		Mast Free-lift Height h_2		Rated Load Capacities							
							Tilt Angle				Load Capacities			
							Single Pneumatic		Double Pneumatic		Single Pneumatic		Double Pneumatic	
			With Load Backrest	Without Load Backrest	With Load Backrest	Without Load Backrest	FWD	BWD	FWD	BWD	LC 500 mm	LC 600 mm	LC 500 mm	LC 600 mm
	mm	mm	mm	mm	mm	mm	deg	deg	deg	deg	kg	kg	kg	kg
TL	3000	2220	4410	3940	155	155	8	10	8	10	5000	4570	5000	4570
	3300	2370	4710	4240	155	155	8	10	8	10	5000	4570	5000	4570
	3450	2445	4860	4390	155	155	8	10	8	10	5000	4570	5000	4570
	3650	2545	5060	4590	155	155	8	10	8	10	5000	4570	5000	4570
	4000	2870	5410	4940	155	155	8	10	8	10	4950	4525	5000	4570
	4250	2995	5660	5190	155	155	8	10	8	10	4850	4430	5000	4570
	4850	3455	6260	5790	155	155	8	8	8	10	4400	4020	4700	4295
	5500	3770	6910	6440	155	155	8	5	8	8	3950	3610	4450	4065
TF	3000	2200	4385	3890	850	1345	8	10	8	10	5000	4570	5000	4570
TT	3700	1985	5115	4600	635	1145	8	8	8	8	5000	4570	5000	4575
	4000	2080	5410	4895	730	1245	8	8	8	8	5000	4570	5000	4575
	4250	2170	5675	5160	820	1335	8	8	8	8	5000	4570	5000	4575
	4500	2255	5930	5420	905	1420	8	8	8	8	5000	4570	5000	4575
	4700	2320	6125	5610	970	1485	8	5	8	8	5000	4570	5000	4575
	5150	2470	6575	6060	1120	1635	8	5	8	8	4550	4165	4700	4300
	5600	2620	7025	6510	1270	1785	8	3	8	5	4400	4025	4550	4165
	6050	2770	7475	6960	1420	1935	8	3	8	3	3400	3110	4350	3980
	6500	2920	7925	7410	1570	2085	8	3	8	3	2700	2470	4200	3845

Mast Chart C-D 50 C-9 / C-D 55 SC-9

Mast Type	Max. Fork Height h_3	Mast Collapsed Height h_1	Mast Extended Height h_4		Mast Free-lift Height h_2		Rated Load Capacities							
							Tilt Angle				Load Capacities			
							Single Pneumatic		Double Pneumatic		Single Pneumatic		Double Pneumatic	
			With Load Backrest	Without Load Backrest	With Load Backrest	Without Load Backrest	FWD	BWD	FWD	BWD	LC 500 mm	LC 600 mm	LC 500 mm	LC 600 mm
	mm	mm	mm	mm	mm	mm	deg	deg	deg	deg	kg	kg	kg	kg
TL	2750	2220	4160	3815	165	165	8	10	8	10	5500	5030	5500	5030
	3050	2370	4460	4115	165	165	8	10	8	10	5500	5030	5500	5030
	3400	2545	4810	4465	165	165	8	10	8	10	5500	5030	5500	5030
	3750	2870	5160	4815	165	165	8	10	8	10	5500	5030	5500	5030
	4000	2995	5410	5065	165	165	8	10	8	10	5350	4895	5500	5030
	4600	3445	6010	5665	165	165	8	10	8	10	5050	4620	5200	4755
	5000	3645	6410	6065	165	165	8	5	8	10	4400	4025	5000	4575
	5500	3895	6910	6565	165	165	8	5	8	8	3250	2975	4800	4390
	5800	4045	7210	6865	165	165	8	5	8	8	2650	2425	4700	4300
TF	2875	2200	4260	3895	860	1230	8	10	8	10	5500	5030	5500	5030
TT	3575	1985	4990	4600	645	1030	8	8	8	8	5500	5030	5500	5035
	3875	2080	5285	4895	740	1130	8	8	8	8	5500	5035	5500	5035
	4125	2170	5550	5160	830	1220	8	8	8	8	5500	5035	5500	5035
	4575	2320	6000	5615	980	1370	8	5	8	5	5500	5035	5450	5035
	5025	2470	6450	6060	1130	1520	8	5	8	5	4900	4485	5250	4805
	5325	2570	6750	6360	1230	1620	8	3	8	5	4550	4165	5100	4670
	5475	2620	6900	6510	1280	1670	8	3	8	5	4300	3940	5000	4580
	5925	2770	7350	6960	1430	1820	8	3	8	5	3500	3205	4900	4485

Note: Mast specifications and rated capacities are based on standard chassis equipped with Pneumatic tyre without sideshifter.

Mast Chart C-D 55 C-9

Mast Type	Max. Fork Height h_3	Mast Collapsed Height h_1	Mast Extended Height h_4		Mast Free-lift Height h_2		Rated Load Capacities					
							Tilt Angle				Load Capacities	
							Single Pneumatic		Double Pneumatic		Single Pneumatic	Double Pneumatic
			With Load Backrest	Without Load Backrest	With Load Backrest	Without Load Backrest	FWD	BWD	FWD	BWD	LC 500 mm	LC 600 mm
	mm	mm	mm	mm	mm	mm	deg	deg	deg	deg	kg	kg
TL	2750	2220	4160	3815	165	165	8	10	8	10	5500	5500
	3050	2370	4460	4115	165	165	8	10	8	10	5500	5500
	3400	2545	4810	4465	165	165	8	10	8	10	5500	5500
	3750	2870	5160	4815	165	165	8	10	8	10	5500	5500
	4000	2995	5410	5065	165	165	8	10	8	10	5500	5500
	4600	3445	6010	5665	165	165	8	8	8	8	5500	5500
	5000	3645	6410	6065	165	165	8	5	8	5	5000	5200
	5500	3895	6910	6565	165	165	8	3	8	5	4250	4500
	5800	4045	7210	6865	165	165	8	3	8	5	3600	3700
TF	2875	2200	4260	3895	860	1230	8	10	8	10	5500	5500
TT	3575	1985	4990	4600	645	1030	8	8	8	8	5500	5500
	3875	2080	5285	4895	740	1130	8	8	8	8	5500	5500
	4125	2170	5550	5160	830	1220	8	8	8	8	5500	5500
	4575	2320	6000	5615	980	1370	8	3	8	8	5500	5500
	5025	2470	6450	6060	1130	1520	8	3	8	5	5200	5200
	5325	2570	6750	6360	1230	1620	8	3	8	3	4500	4600
	5475	2620	6900	6510	1280	1670	8	3	8	3	4300	4500
	5925	2770	7350	6960	1430	1820	8	3	8	3	3300	3500

Note: Mast specifications and rated capacities are based on standard chassis equipped with Pneumatic tyre without sideshifter.

Standard Features

1. Euro stage V Engine
2. Indoor and outdoor use
3. Connectors are rated IP65
4. LED front lights
5. Large rear view mirrors
6. Electronic parking brake
7. Reverse lock
8. Ground speed control
9. Auto shift controller
10. Oil-cooled disc brakes
11. Heavy-duty radiator
12. Dual element air cleaner
13. Anti-slip step plate
14. Operator design features
    - Clear-view overhead guard and mast design
    - Wide spacious floorboard
    - Excellent visibility
    - Operator Presence Sensor
    - Park brake alarm
    - Large entry grab bar
    - 5" LCD screen
15. Power steering
16. Adjustable steer column
17. Small steering wheel
18. USB port & 12 V electrical outlet
19. Pneumatic tyres
20. Manual lever controls

Optional Equipment

1. Suspension seat with:
   - Armrest, seat heater and lumbar support
2. High overhead guard for more space and comfort
3. Additional operator design features
   - Fingertip controls (3-way or 4-way) with
     - Forward & backward switch
     - Emergency stop switch
     - Auto tilt leveling
     - Auto shift controller
   - 7" Display
   - Modular cabin versions
   - Tempered laminated front screen
   - Seat belt indicator
   - Air conditioner for hard cabin
   - Radio with MP3 player
   - Cup holder
4. Lights
   - LED Front worklights with turn signals
   - LED Rear lights with back-up and turn signals
   - LED Rear worklights
5. Audible warning devices
   - Back-up travel alarm
6. Rear view camera for hard cabin
7. Visual warning devices
   - Flashing light
   - Floor spot light (blue or red light)
   - Floor linelight (blue or red)
8. Attachments
   - Hang-on sideshifter
   - Integral sideshifting fork positioner
9. Heavy-duty applications
   - Pre cleaner
   - Open-core radiator
   - Belly plate
   - Main fuel filter & pre fuel filter
10. Stability System Plus with
    - Steering angle display (the steer wheel angle appears on the display)
    - Travelling speed is decreased (down to 5 km/h) when the mast is raised above primery stage
    - Forward tilt angle is limited to 2° when the mast is raised above primery stage
    - Alarm sounds when the mast is raised above the primery stage and tilted more than 2°
11. Super Elastic tyres
12. Non-marking Super Elastic tyres
13. InfoLink® Ready

Warning Device Notes

Audible or visual alerts

Safety considerations and dangers associated with audible travel alarms and lights include:

- Multiple alarms and/or lights can cause confusion.
- Workers ignore the alarms and/or lights after day-in and day-out exposure.
- Operator may transfer the responsibility for “looking out” to the pedestrians.
- Annoys operators and pedestrians.

Other Options Available

Contact Crown for additional options.

Dimensions and performance data given may vary due to manufacturing tolerances. Performance is based on an average size vehicle and is affected by weight, truck condition, truck equipment and the conditions of the operating area. Crown products and specifications are subject to change without notice.

C-D 35-55 SPEC GB 06/24, 10
M03955-006-02
Printed in Germany

ISO 9001 Quality Management System certified for the design, development, manufacture, sale and product support of industrial trucks.

European Manufacturing:
Crown Gabelstapler GmbH & Co. KG
Продавец:
kupit-shtabeler.ru
+7 495 159-44-32
zakaz@kupit-shtabeler.ru