# SP 1500
# SERIES

## Specifications
High-level order picker

**SP 1510 Series**

High-level order picker
fixed forks

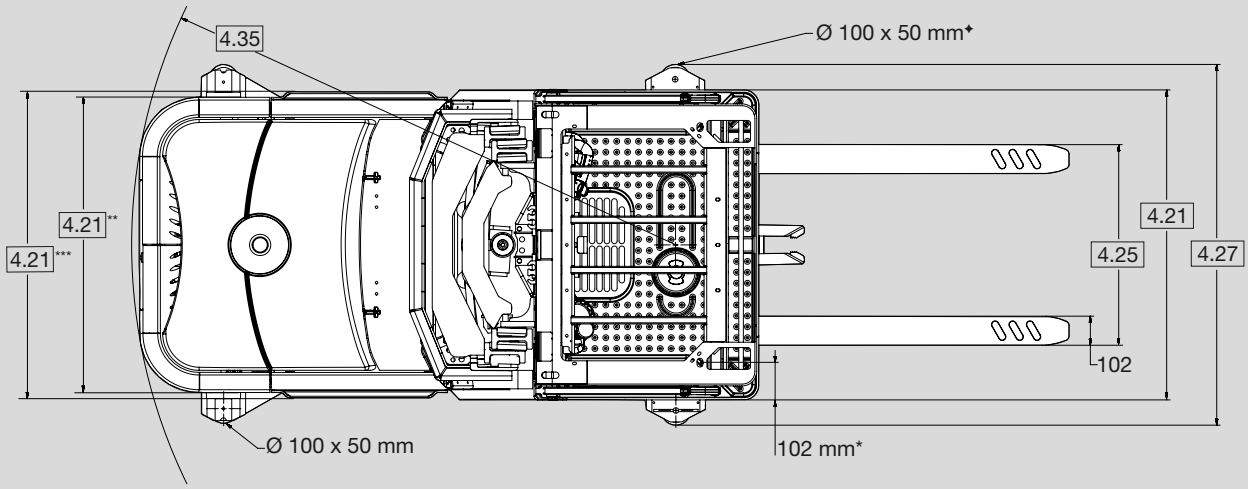


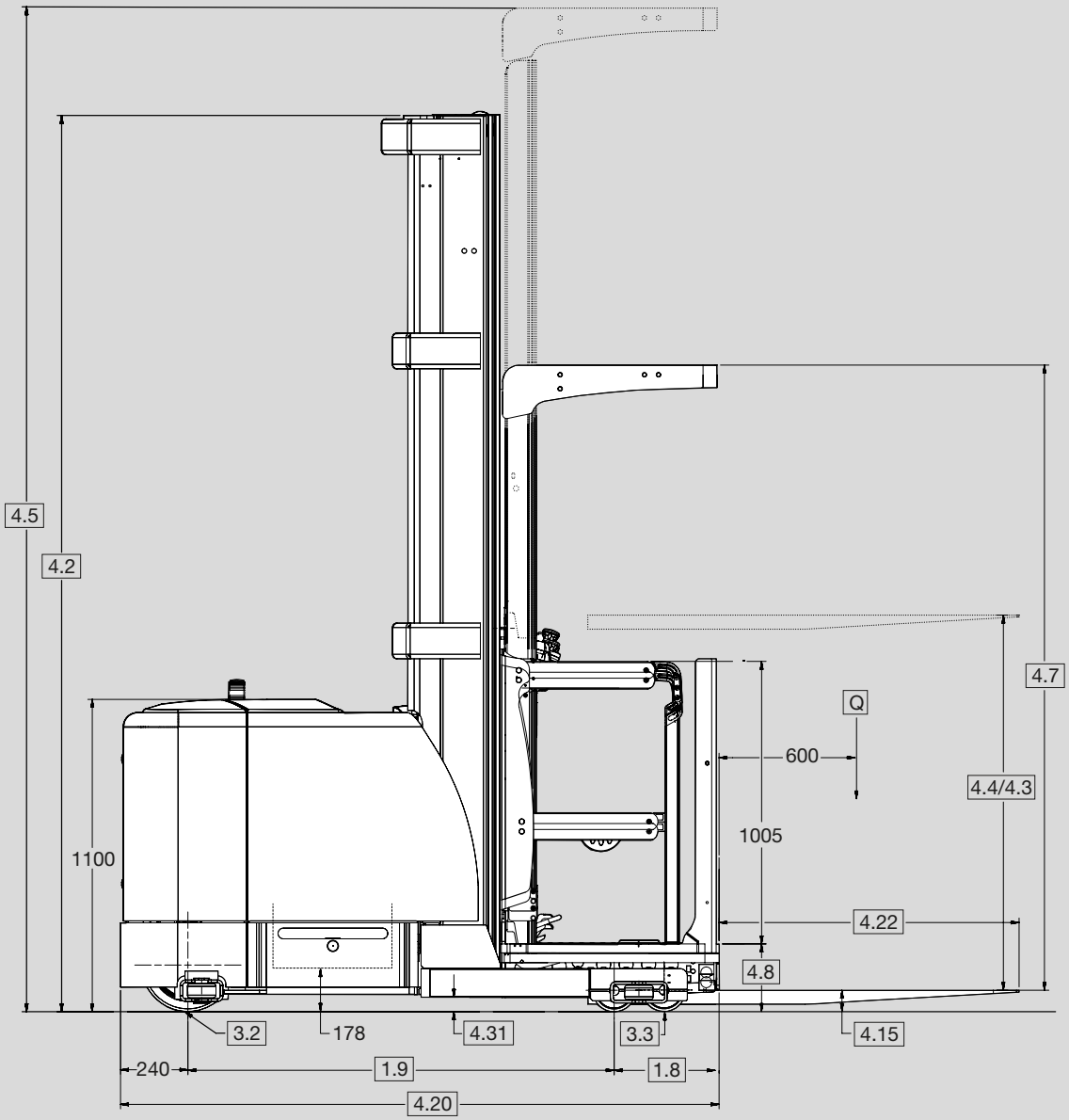


* 140 mm when 4.4 is greater than 6,095 up to 8,840 mm
203 mm when 4.4 is greater than 8,840 mm
** Overall width front
*** Overall width rear

✦ Ø 65 × 50 mm, tip mounted if WAGR minus OW (4.27-4.21) = 20 mm to 139 mm
Ø 65 × 50 mm, side mounted if WAGR minus OW (4.27-4.21) = 140 mm to 209 mm
Ø 100 × 50 mm, side mounted if WAGR minus OW (4.27-4.21) = 210 mm to 590 mm
WAGR = Width Across Guide Rollers, OW = Overall Width (rear)

**SP 1510 Series**

High-level order picker
fixed forks

| | | | | | | | | | |
|---|---|---|---|---|---|---|---|---|---|
| Distinguishing mark | 1.1 | **Manufacturer** | | | | Crown Equipment Corporation | | | |
| | 1.2 | **Model** | | | | SP 1510-1.25 | | | |
| | 1.3 | **Power source** | Electric | | Volt | 24 / 48 | | | |
| | 1.4 | **Operator type** | | | | Order picker | | | |
| | 1.5 | **Rated capacity *** | | Q | t | 1.25 | | | |
| | 1.6 | **Load centre** | | c | mm | 600 | | | |
| | 1.8 | **Load distance** | | x | mm | 336 | | | |
| | | **Battery compartment** | | | | B | C | D | E |
| | 1.9 | **Wheelbase** | TL | y | mm | 1,320 | 1,380 | 1,420 | 1,490 |
| | | | TT | y | mm | 1,305 | 1,360 | 1,405 | 1,470 |
| Weight | 2.1 | **Service weight **** | Less battery | | kg | 2,900 | 2,830 | 2,840 | 2,860 |
| | 2.2 | **Axle load **** | With load, front / rear | | kg | 1,255 / 3,695 | 1,359 / 3,741 | 1,453 / 3,785 | 1,560 / 3,841 |
| | 2.3 | **Axle load **** | Without load, front / rear | | kg | 2,066 / 1,634 | 2,138 / 1,713 | 2,211 / 1,779 | 2,284 / 1,867 |
| Tyres/wheels/ chassis | 3.1 | **Tyres** | | | | Polyurethane / Vulkollan | | | |
| | 3.2 | **Tyre size** | Front | | mm | Ø 330 × 140 | | | |
| | 3.3 | **Tyre size** | Rear | | mm | Ø 152 × 70 *** | | | |
| | 3.5 | **Wheels** | Number front/rear (x=drive wheels) | | | 4/1x | | | |
| Dimensions | 4.2 | **Mast collapsed height** | | $h_1$ | mm | see table 1, 2 and 3 | | | |
| | 4.3 | **Free-lift** | | $h_2$ | mm | see table 1, 2 and 3 | | | |
| | 4.4 | **Lift height** | | $h_3$ | mm | see table 1, 2 and 3 | | | |
| | 4.5 | **Mast extended height** | | $h_4$ | mm | see table 1, 2 and 3 | | | |
| | 4.7 | **Overhead guard height** | | $h_6$ | mm | see table 1, 2 and 3 | | | |
| | 4.8 | **Seat height relating to SIP/stand height** lowered | | $h_7$ | mm | 240 | | | |
| | 4.14 | **Stand height** | Elevated | $h_{12}$ | mm | see table 1, 2 and 3 | | | |
| | 4.15 | **Fork height** | Lowered | $h_{13}$ | mm | 75.5 | | | |
| | 4.20 | **Head length** | TL | $l_2$ | mm | 1,895 | 1,955 | 2,000 | 2,065 |
| | | | TT | $l_2$ | mm | 1,915 | 1,975 | 2,015 | 2,085 |
| | 4.21 | **Overall width** | Front/rear | $b_1/b_2$ | mm | see table 1, 2 and 3 | | | |
| | | | Operator platform | $b_9$ | mm | see table 1, 2 and 3 | | | |
| | 4.22 | **Fork dimensions** DIN ISO 2331 | Standard | sxexl | mm | 1,145 × 102 × 51 | | | |
| | | | Optional length | l | mm | 760/915/990/1,065/1,220/1,370/1,525/1,830/2,135 | | | |
| | 4.25 | **Fork spread** | Min – max. | $b_5$ | mm | 610–762 | | | |
| | 4.27 | **Width across side roller** | | $b_6$ | mm | see table 1, 2 and 3 | | | |
| | 4.31 | **Ground clearance** | With load below mast | $m_1$ | mm | 50 | | | |
| | 4.35 | **Turning radius** | TL | Wa | mm | 1,780 | 1,835 | 1,875 | 1,945 |
| | | | TT | Wa | mm | 1,760 | 1,815 | 1,855 | 1,925 |
| Performance data | 5.1 | **Travel speed** | Power unit first, With load / without load | | km/h | 12 / 12 | | | |
| | 5.2 | **Lift speed** | With load / without load | 24 V | m/s | 0.22 / 0.36 | | | |
| | | | With load / without load | 48 V | m/s | 0.50 / 0.56 | | | |
| | | | With load / without load | 48 V opt. | m/s | 0.50 / 0.71 | | | |
| | 5.3 | **Lowering speed** | With load / without load | 24 V | m/s | 0.41 / 0.41 | | | |
| | | | With load / without load | 24 V opt. | m/s | 0.56 / 0.56 | | | |
| | | | With load / without load | 48 V | m/s | 0.41 / 0.41 | | | |
| | | | With load / without load | 48 V opt. | m/s | 0.56**** / 1.04 | | | |
| | 5.10 | **Service brake** | Service | | | regenerative | | | |
| | | | Park | | | electro-magnetic | | | |
| Electric motor | 6.1 | **Traction motor** | Rating at S2 60 min | 24 V | kW | 3.9 | | | |
| | | | Rating at S2 60 min | 48 V | kW | 4.8 | | | |
| | 6.2 | **Pump motor** | Rating at S3 15% | 24 V | kW | 15.0 | | | |
| | | | Rating at S3 15% | 48 V | kW | 15.0 | | | |
| | 6.3 | **Max. battery box size** | DIN 43531 | l × w × h | mm | 984 × 371 × 787 | 984 × 429 × 787 | 984 × 470 × 787 | 984 × 536 × 787 |
| | 6.4 | **Battery voltage** | Voltage | | V | 24 / 48 | | | |
| | | | Max. ampere | | Ah | 1,050 / 735 | | | |
| | 6.5 | **Battery weight** | Min | 24 V | kg | 690 | 910 | 1,035 | 1,180 |
| | | | | 48 V | kg | 775 | 910 | 1,035 | 1,180 |
| | 8.1 | **Drive unit** | | | | AC traction | | | |

* Capacity may be subject to derating if longer load centre (fork length) or wider platform width is required
** Values shown with TT mast 6,095 mm lift height, 2,720 mm collapsed height, 1,065 mm overall width and platform width
*** Ø 152 × 108 mm if max. lift height 4.4 is 7,010 mm or greater
**** With load >680 kg. Below 680 kg remains 1.04 m/s

Table 1 Standard straddle

| | | | | | SP 1510 | | | | | | | |
|---|---|---|---|---|---|---|---|---|---|---|---|---|
| | | | | | TL | | | | | TT | | |
| 4.2 | **Mast collapsed height** | | $h_1$ | mm | 2,265* | 2,415 | 2,720 | 3,025 | 3,330 | 2,265* | 2,415 | 2,720 |
| 4.3 | **Free-lift** | | $h_2$ | mm | 75 | 150 | | | | 75 | 180 | 330 |
| 4.4 | **Lift height** | | $h_3$ | mm | **3,425** | **3,730** | **4,340** | **4,900** | **5,410** | **4,950** | **5,330** | **6,095** |
| 4.5 | **Mast extended height** | | $h_4$ | mm | 5,690 | 5,995 | 6,605 | 7,165 | 7,675 | 7,215 | 7,595 | 8,360 |
| 4.7 | **Overhead guard height** | | $h_6$ | | 2,225 | | | | | | | |
| 4.14 | **Operator stand height** | Raised | $h_{12}$ | mm | 3,595 | 3,900 | 4,510 | 5,070 | 5,580 | 5,120 | 5,500 | 6,265 |
| 4.21 | **Overall width** | Front / rear | $b_2$ | mm | 1,015 / 1,065 | | | | | | | |
| | | Operator platform | | mm | 1,065 | | | | | | | |
| 4.27 | **Width across side roller** | In 6.5 mm increments | $b_6$ | mm | 1,156–1,658 | | | | | | | |

* Overall collapsed height 2,315 mm

Table 2 Standard straddle

| | | | | | SP 1510 | | | | | | | |
|---|---|---|---|---|---|---|---|---|---|---|---|---|
| | | | | | TT | | | | | | | |
| 4.2 | **Mast collapsed height** | | $h_1$ | mm | 3,025 | 3,175 | 3,330 | 3,635 | 3,785 | 3,940 | 4,090 | 4,345 |
| 4.3 | **Free-lift** | | $h_2$ | mm | 635 | 780 | 940 | 1,245 | 1,395 | 1,550 | 1,700 | 1,955 |
| 4.4 | **Lift height** | | $h_3$ | mm | **7,010** | **7,465** | **7,920** | **8,380** | **8,835** | **9,295** | **9,750** | **10,210** |
| 4.5 | **Mast extended height** | | $h_4$ | mm | 9,275 | 9,730 | 10,190 | 10,645 | 11,100 | 11,560 | 12,015 | 12,475 |
| 4.7 | **Overhead guard height** | | $h_6$ | | 2,225 | | | | | | | |
| 4.14 | **Operator stand height** | Raised | $h_{12}$ | mm | 7,180 | 7,635 | 8,095 | 8,550 | 9,005 | 9,465 | 9,920 | 10,380 |
| 4.21 | **Overall width** | Front / rear | $b_2$ | mm | 1,015 / 1,220 | 1,270 / 1,375 | | 1,345 / 1,375 | 1,420 / 1,525 | | 1,420 / 1,625 | |
| | | Operator platform | | mm | 1,220 | 1,375 | | | 1,525 | | 1,625 | |
| 4.27 | **Width across side roller** | In 6.5 mm increments | $b_6$ | mm | 1,240–1,810 | 1,390–1,962 | 1,390–1,962 | 1,440–2,013 | 1,543–2,115 | 1,543–2,115 | 1,644–2,216 | 1,644–2,216 |

Table 3 Narrow straddle

| | | | | | SP 1510 | | | | |
|---|---|---|---|---|---|---|---|---|---|
| | | | | | TT | | | | |
| 4.2 | **Mast collapsed height** | | $h_1$ | mm | 3,175 | 3,330 | 3,635 | 3,785 | 3,940 |
| 4.3 | **Free-lift** | | $h_2$ | mm | 780 | 940 | 1,245 | 1,395 | 1,500 |
| 4.4 | **Lift height** | | $h_3$ | mm | **7,465** | **7,920** | **8,380** | **8,835** | **9,295** |
| 4.5 | **Mast extended height** | | $h_4$ | mm | 9,730 | 10,190 | 10,645 | 11,100 | 11,560 |
| 4.7 | **Overhead guard height** | | $h_6$ | | 2,225 | | | | |
| 4.14 | **Operator stand height** | Raised | $h_{12}$ | mm | 7,635 | 8,095 | 8,550 | 9,005 | 9,465 |
| 4.21 | **Overall width** | Front / rear | $b_2$ | mm | 1,015/1,220 | | 1,015/1,320 | 1,270/1,425 | 1,345/1,425 |
| | | Operator platform | | mm | 1,220 | | | 1,375 | |
| 4.27 | **Width across side roller** | In 6.5 mm increments | $b_6$ | mm | 1,240–1,810 | 1,156–1,658 | 1,240–1,810 | 1,440–2,013 | 1,440–2,013 |

Max. capacity: 1,250 kg for collapsed heights up to 4,090 mm
1,100 kg for collapsed heights greater than 4,090 mm and up to 4,345 mm

**SP 1520 Series**

High-level order picker
auxiliary mast

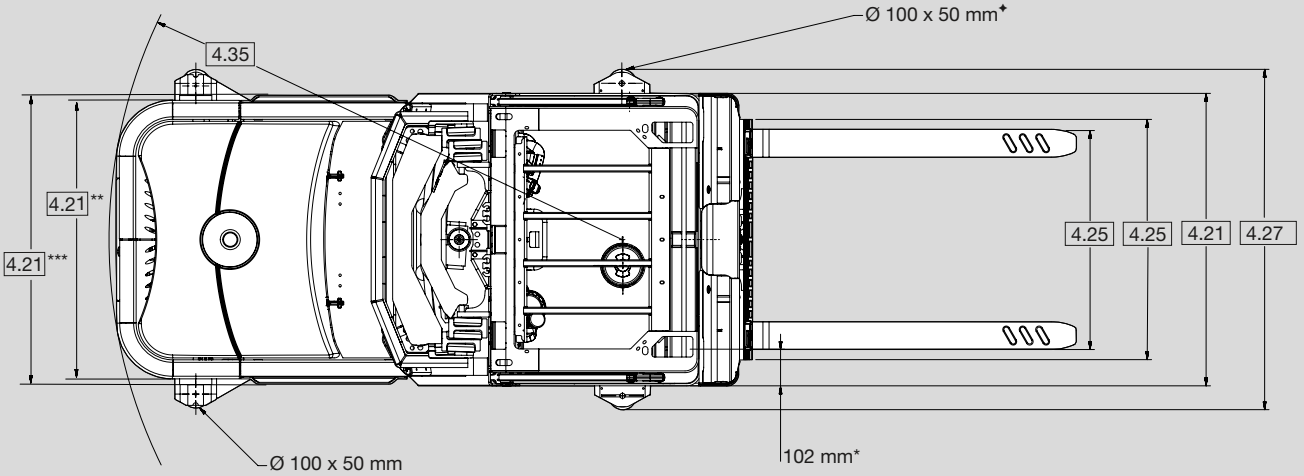


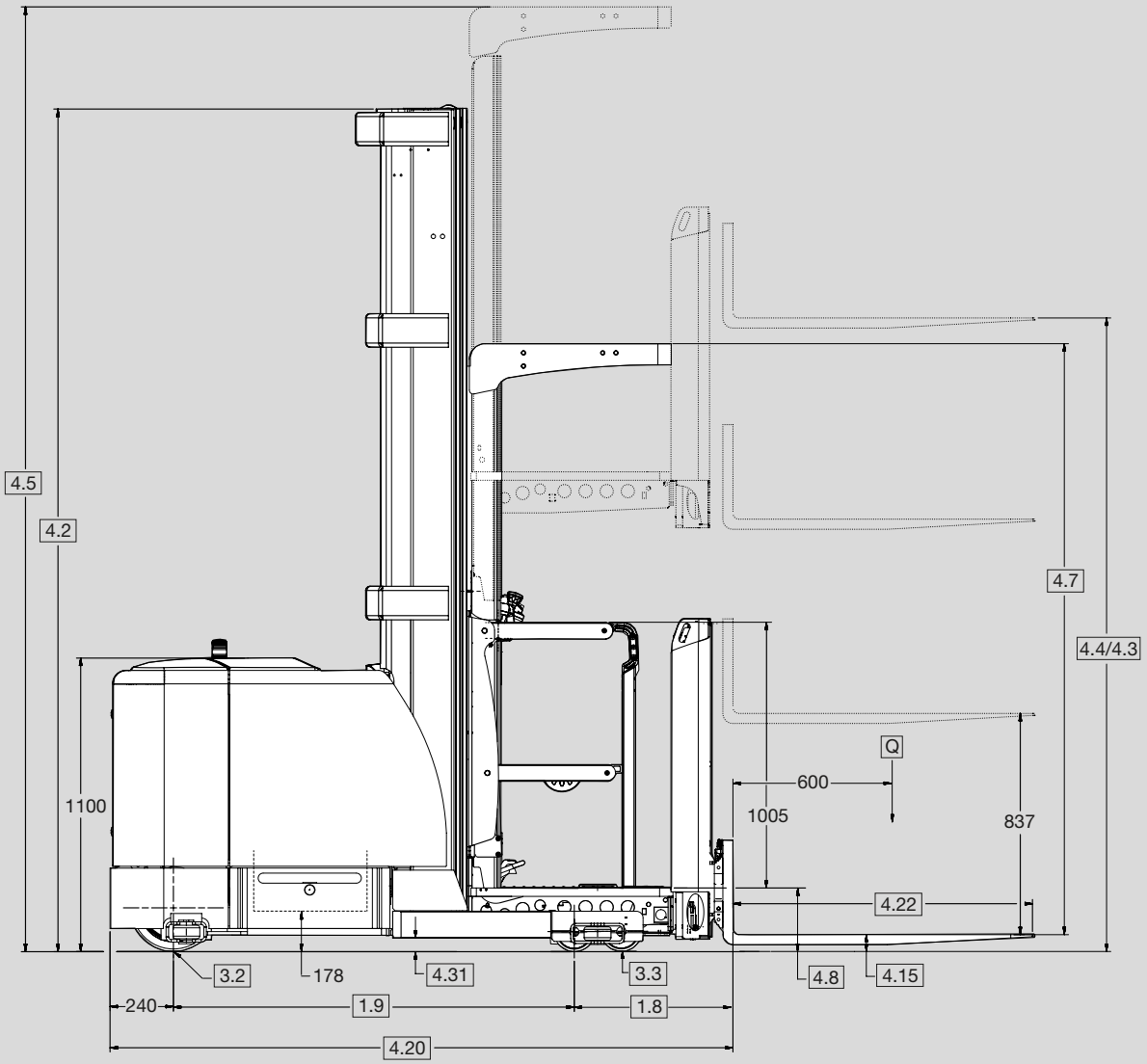


* 140 mm when 4.4 is greater than 6,910 up to 9,195 mm
203 mm when 4.4 is greater than 9,195 mm
** Overall width front
*** Overall width rear

✦ Ø 65 × 50 mm, tip mounted if WAGR minus OW (4.27-4.21) = 20 mm to 139 mm
Ø 65 × 50 mm, side mounted if WAGR minus OW (4.27-4.21) = 140 mm to 209 mm
Ø 100 × 50 mm, side mounted if WAGR minus OW (4.27-4.21) = 210 mm to 590 mm
WAGR = Width Across Guide Rollers, OW = Overall Width (rear)

**SP 1520 Series** High-level order picker auxiliary mast

| | | | | | | | | | |
|---|---|---|---|---|---|---|---|---|---|
| Distinguishing mark | 1.1 | **Manufacturer** | | | | Crown Equipment Corporation | | | |
| | 1.2 | **Model** | | | | SP 1520-1.0 | | | |
| | 1.3 | **Power source** | Electric | | Volt | 24 / 48 | | | |
| | 1.4 | **Operator type** | | | | Order picker | | | |
| | 1.5 | **Rated capacity *** | | Q | t | 1.0 | | | |
| | 1.6 | **Load centre** | | c | mm | 600 | | | |
| | 1.8 | **Load distance** | | x | mm | 565 | | | |
| | | **Battery compartment** | | | | B | C | D | E |
| | 1.9 | **Wheelbase** | TL | y | mm | 1,320 | 1,380 | 1,420 | 1,490 |
| | | | TT | y | mm | 1,305 | 1,360 | 1,405 | 1,470 |
| Weight | 2.1 | **Service weight **** | Less battery | | kg | 3,105 | 3,040 | 3,050 | 3,070 |
| | 2.2 | **Axle load **** | With load, front / rear | | kg | 1,129 / 3,780 | 1,238 / 3,822 | 1,335 / 3,862 | 1,447 / 3,913 |
| | 2.3 | **Axle load **** | Without load, front / rear | | kg | 1,941 / 1,968 | 2,018 / 2,041 | 2,093 / 2,104 | 2,173 / 2,178 |
| Tyres/wheels/ chassis | 3.1 | **Tyres** | | | | Polyurethane / Vulkollan | | | |
| | 3.2 | **Tyre size** | Front | | mm | Ø 330 × 140 | | | |
| | 3.3 | **Tyre size** | Rear | | mm | Ø 152 × 70 *** | | | |
| | 3.5 | **Wheels** | Number front/rear (x=drive wheels) | | | 4/1x | | | |
| Dimensions | 4.2 | **Mast collapsed height** | | $h_1$ | mm | see table 4 and 5 | | | |
| | 4.3 | **Free-lift** | | $h_2$ | mm | see table 4 and 5 | | | |
| | 4.4 | **Lift height** | | $h_3$ | mm | see table 4 and 5 | | | |
| | 4.5 | **Mast extended height** | | $h_4$ | mm | see table 4 and 5 | | | |
| | 4.7 | **Overhead guard height** | | $h_6$ | mm | see table 4 and 5 | | | |
| | 4.8 | **Seat height relating to SIP/stand height** lowered | | $h_7$ | mm | 240 | | | |
| | 4.14 | **Stand height** | Elevated | $h_{12}$ | mm | see table 4 and 5 | | | |
| | 4.15 | **Fork height** | Lowered | $h_{13}$ | mm | 64 | | | |
| | 4.20 | **Head length** | TL | $l_2$ | mm | 2,125 | 2,185 | 2,225 | 2,290 |
| | | | TT | $l_2$ | mm | 2,145 | 2,200 | 2,245 | 2,310 |
| | 4.21 | **Overall width** | Front/rear | $b_1/b_2$ | mm | see table 4 and 5 | | | |
| | | | Operator platform | $b_9$ | mm | see table 4 and 5 | | | |
| | 4.22 | **Fork dimensions** DIN ISO 2331 | Standard | sxexl | mm | 1,145 × 102 × 38 | | | |
| | | | Optional length | l | | 760/915/990/1,070/1,220 | | | |
| | 4.24 | **Fork carriage width** | | $b_3$ | | 876 | | | |
| | 4.25 | **Fork spread** | Min – max. | $b_5$ | mm | 205–840 | | | |
| | 4.27 | **Width across side roller** | | $b_6$ | mm | see table 4 and 5 | | | |
| | 4.31 | **Ground clearance** | With load below mast | $m_1$ | mm | 50 | | | |
| | 4.35 | **Turning radius** | TL | Wa | mm | 1,780 | 1,835 | 1,875 | 1,945 |
| | | | TT | Wa | mm | 1,760 | 1,815 | 1,855 | 1,925 |
| Performance data | 5.1 | **Travel speed** | Power unit first, With load / without load | | km/h | 12 / 12 | | | |
| | 5.2 | **Lift speed** | With load / without load | 24 V | m/s | 0.22 / 0.36 | | | |
| | | | With load / without load | 48 V | m/s | 0.50 / 0.56 | | | |
| | | | With load / without load | 48 V opt. | m/s | 0.50 / 0.71 | | | |
| | 5.3 | **Lowering speed** | With load / without load | 24 V | m/s | 0.41 / 0.41 | | | |
| | | | With load / without load | 24 V opt. | m/s | 0.56 / 0.56 | | | |
| | | | With load / without load | 48 V | m/s | 0.41 / 0.41 | | | |
| | | | With load / without load | 48 V opt. | m/s | 0.56**** / 1.04 | | | |
| | 5.10 | **Service brake** | Service | | | regenerative | | | |
| | | | Park | | | electro-magnetic | | | |
| Electric motor | 6.1 | **Traction motor** | Rating at S2 60 min | 24 V | kW | 3.9 | | | |
| | | | Rating at S2 60 min | 48 V | kW | 4.8 | | | |
| | 6.2 | **Pump motor** | Rating at S3 15% | 24 V | kW | 15.0 | | | |
| | | | Rating at S3 15% | 48 V | kW | 15.0 | | | |
| | 6.3 | **Max. battery box size** | DIN 43531 | l × w × h | mm | 984 × 371 × 787 | 984 × 429 × 787 | 984 × 470 × 787 | 984 × 536 × 787 |
| | 6.4 | **Battery voltage** | Voltage | | V | 24 / 48 | | | |
| | | | Max. ampere | | Ah | 1,050 / 735 | | | |
| | 6.5 | **Battery weight** | Min | 24 V | kg | 690 | 910 | 1,035 | 1,180 |
| | | | | 48 V | kg | 775 | 910 | 1,035 | 1,180 |
| | 8.1 | **Drive unit** | | | | AC traction | | | |

* Capacity may be subject to derating if longer load centre (fork length) or wider platform width is required;
** Values shown with TT mast 6,910 mm lift height, 2,720 mm collapsed height, 1,220 mm overall width and platform width
*** Ø 152 × 108 mm if max lift height 4.4 is 7,820 mm or greater
**** With load >680 kg. Below 680 kg remains 1.04 m/s

Table 4 Standard straddle

| | | | | | SP 1520 | | | | | | | | |
|---|---|---|---|---|---|---|---|---|---|---|---|---|---|
| | | | | | TL | | | | | TT | | | |
| 4.2 | **Mast collapsed height** | | $h_1$ | mm | 2,265* | 2,415 | 2,720 | 3,025 | 3,330 | 2,265* | 2,415 | 2,720 | 3,025 |
| 4.3 | **Free-lift** | | $h_2$ | mm | 875 | 950 | | | | 830 | 965 | 1,145 | 1,445 |
| 4.4 | **Lift height** | Including auxiliary lift | $h_3$ | mm | **4,240** | **4,545** | **5,155** | **5,715** | **6,220** | **5,765** | **6,145** | **6,905** | **7,820** |
| 4.5 | **Mast extended height** | | $h_4$ | mm | 5,690 | 5,995 | 6,605 | 7,165 | 7,675 | 7,215 | 7,595 | 8,360 | 9,275 |
| 4.7 | **Overhead guard height** | | $h_6$ | | 2,240 | | | | | | | | |
| 4.14 | **Operator stand height** | Raised | $h_{12}$ | mm | 3,595 | 3,900 | 4,510 | 5,070 | 5,575 | 5,120 | 5,500 | 6,260 | 7,175 |
| 4.21 | **Overall width** | Front / rear | $b_2$ | mm | 1,015 / 1,065 | | | | | | | 1,015 / 1,220 | 1,270 / 1,375 |
| | | Operator platform | | mm | 1,065 | | | | | | | 1,220 | 1,375 |
| 4.27 | **Width across side roller** | In 6.5 mm increments | $b_6$ | mm | 1,090–1,661 | | | | | | | 1,238 / 1,809 | 1,389 / 1,960 |

* Overall collapsed height 2,315 mm

Table 5 Standard straddle

| | | | | | SP 1520 | | | |
|---|---|---|---|---|---|---|---|---|
| | | | | | TT | | | |
| 4.2 | **Mast collapsed height** | | $h_1$ | mm | 3,175 | 3,330 | 3,635 | 3,785 |
| 4.3 | **Free-lift** | | $h_2$ | mm | 1,600 | 1,750 | 2,055 | 2,205 |
| 4.4 | **Lift height** | Including auxiliary lift | $h_3$ | mm | **8,280** | **8,735** | **9,190** | **9,650** |
| 4.5 | **Mast extended height** | | $h_4$ | mm | 9,730 | 10,190 | 10,645 | 11,100 |
| 4.7 | **Overhead guard height** | | $h_6$ | | 2,240 | | | |
| 4.14 | **Operator stand height** | Raised | $h_{12}$ | mm | 7,635 | 8,090 | 8,550 | 9,005 |
| 4.21 | **Overall width** | Front / rear | $b_2$ | mm | 1,270 / 1,375 | 1,345 / 1,425 | 1,420 / 1,525 | |
| | | Operator platform | | mm | 1,375 | 1,375 | 1,525 | |
| 4.27 | **Width across side roller** | In 6.5 mm increments | $b_6$ | mm | 1,389–1,960 | 1,439–2,010 | 1,544–2,115 | |

Max. capacity: 1,000 kg for collapsed heights up to 3,785 mm

**Standard equipment**

1. Gena operating system
2. 24 or 48-volt electrical system
3. AC lift, traction and steer motors
4. Linear height speed control gradually reduces travel speed as the platform raises
5. Variable lift/lower
6. Regenerative lower
7. Programmable lift/lower cutouts (up to 6)
   - Zone select: designate lift/lower cutouts into 3 separate zones
8. OnTrac anti-slip traction control
9. Intelligent braking system combines the optimum amount of friction and plugging
10. Intelligent steering system automatically slows the travel speed when in a turn and provides smooth, electronic power steering
11. Manual wire sense (with optional wire guidance)
12. Connectivity*
    - Cellular radio
    - Wireless truck firmware updates
    - Wireless truck data collection
    - Push wireless settings
13. Integrated InfoLink hardware **
    - Card reader
    - Impact sensor
    - Wi-Fi radio
14. RAM mounted 7" colour touch screen display with integrated speaker
    - Optically bonded 2 mm thick capacitive touch screen
    - Integrated navigation buttons for freezer/cold storage applications
    - 40+ available languages
    - Vehicle status icons
    - Customisable dashboard with widgets
    - Steering wheel indicator / Wire guidance
    - Stopwatch
    - Battery discharge indicator
    - Hour meter
    - Height
    - Clock
    - Odometer
    - Zone select
    - Calculator
    - Performance modes
    - Safety reminders
    - Enhanced service diagnostics and troubleshooting
    - Detailed event information and history
    - Built-in analyser
    - Step-by-step calibrations
    - Features programmability
    - Adjust performance settings
    - Maintenance mode**
    - Visual inspection checklist**
    - Impact strobe light and audible alert tone**
15. Start-up and run-time diagnostics
16. Corrosion conditioning
17. Heavy-duty power unit
    - Removable steel battery side covers
    - Hinged, lift-off steel power unit doors
    - Hinged, top battery cover
    - 51 mm diameter battery rollers
18. Service panel with platform raise/lower buttons located behind power unit doors
19. Manual lowering valve located behind power unit doors
20. LED flashing light
21. Four battery compartment sizes: 371 mm, 427 mm, 470 mm, 536 mm
22. SB 350 battery connector
23. Colour-coded wiring
24. 330 mm diameter poly drive tyre
25. 152 mm diameter tandem load wheels
26. Operator-centric platform
    - Visibility windows
      - Large upper window — mesh screen
      - Exclusive middle operator window — mesh screen
      - Centre floorboard window (1510 model)
      - Side floorboard slot windows
      - Auxiliary mast visibility windows (SP 1520 model) — mesh screen
    - Cantilever side gates with cutout switches and integrated gas strut, padding and bungee cord
    - Premium anti-fatigue floor mat
    - 152 mm diameter brake pedal
    - Ergonomically designed operator controls
      - Right hand controls optimised for blending traction, lift/lower and horn
        i. Thumbwheel for traction control
        ii. Paddle for lift/lower control
        iii. Urethane covered handgrip with integrated horn button
      - Left hand steering control
        i. Exclusive, adjustable horizontal and vertical tiller knob orientation
        ii. Spinner knob with urethane pad inserts
        iii. Urethane handgrip for stability in guided aisles
    - 2,130 mm tall operator compartment
    - Built-in platform storage
    - Integrated Work Assist mounting rails
      i. Flexibility in positioning Work Assist accessories
      ii. Centre mounted Work Assist organiser bin
    - Retractable tether and body harness
    - Alternative tether attachment locations
    - Key switch
    - USB charging port (5 V, 2 A)
27. 38 mm manual pallet grab
28. InfoPoint component maps

**Optional equipment**

1. Xpress Lower
2. High speed lift (48 V models)
3. Independent right and left power unit facing control set height adjustability of 102 mm
4. Wire and/or rail guidance
5. End aisle control system (wire or rail guidance required)
6. High capacity for standard straddle
7. Narrow straddle
8. Fork lengths
9. Pallet/cart detection
10. Override switch for lift/lower cutouts
11. Keyless user access
12. Display navigation knob (standard with cold storage conditioning)
13. Panoramic Lexan overhead guard
14. Clear glass upper visibility windows
15. Clear poly middle visibility window
16. Clear poly auxiliary mast visibility windows (SP 1520 model)
17. 1,220 mm, 1,370 mm, 1,525 mm and 1,625 mm wide operator platforms
18. 1,980 mm tall operator compartment
19. LED work lights, LED dome lights and dual operator fans
20. LED spotlights
    - Overhead guard mounted, adjustable
    - Mast mounted
21. Overhead guard extensions with built-in LED pick bay lights
22. Floor spotlight — Blue
23. Travel alarm
24. Operator backrest/perch (SP 1520 model)
25. Full length side gates with cutout switches and integrated gas struts, padding and bungee cord
26. Side gates raised travel and lift/lower functionality — programmable
27. Battery retainer interlock switch
28. V-Force lithium-ion ready
29. Fuel cell ready
30. 102 mm, 152 mm or variable width (38–152 mm) manual pallet grab
31. Variable width (38–152 mm) electric pallet grab
32. Cold storage conditioning
    - Includes corrosion conditioning, ribbed floor mat, and mesh screen windows
33. Positive/negative accessory cable (@ truck voltage)
34. UL EE rating
35. 762 mm lanyard boom
36. Load wheel and drive tyre compounds
37. Rearview mirrors
38. Work Assist accessories
    - Work Assist packages
    - Additional USB power supply
    - Scan-gun holder
    - Radio antenna module mount
    - Shrink wrap holder
    - Cup holder
    - Angled storage buckets
    - Clip pad
    - Pocket inserts for standard organiser bin
    - Cargo net
    - Rubbish bracket
    - Corner tray
    - Centre window bracket
    - Gate-mounted reusable bag
    - Gate-mounted pocket
    - Large, magnetic-mounted power unit storage bin
39. Special paint
40. Fire extinguisher
41. Aluminium extended platform
42. Fork facing controls or dual facing (fork and power unit) controls (SP 1520 model)

* Crown Lift Trucks with the Gena operating system are connected products. Please see for the data use policy to see more.

** Functional with an active InfoLink service plan.

**Gena operating system**

Crown's proven integrated control structure provides an enhanced user experience for operators, service technicians and managers. Integrated InfoLink hardware allows for seamless enabling of Crown's telematics fleet management solution.

The Gena operating system monitors inputs from all on-board sensors and responds instantaneously to control truck systems for safe, optimised performance. All control modules are in constant communication via a CAN (Control Area Network) bus so that real-time information is accessible to the system at all times.

Standard safety and performance features further boost operator confidence and productivity, increasing throughput in narrow aisle applications. Real-time truck communication to the user through the Gena display equates to a powerful data-rich experience. Wireless firmware downloads ensure that the Gena operating system can be easily updated without requiring the use of a handset or laptop.

**7" touch screen display**

The industrial grade, capacitive touch screen display provides intuitive menus and configurable widgets to enhance operator engagement, productivity and situational awareness. Large on-screen colour graphics provide an improved visual interface while an integrated speaker provides unique audible tones specific to the on-screen communication.

Screens also offer context-sensitive assistance, including alerts, automated assistance and dynamic real-time data. Safety reminder messages and an inspection checklist with visual cues* provide industry exclusive capabilities that reinforce operator training.

A refined service menu enables viewing of multiple lift truck inputs and outputs and step-by-step calibrations with voltage readouts which assists in expediting trouble shooting. Technicians can quickly access service history, set up performance parameters, and enable or disable truck features through the display.

**Operator platform**

The enhanced platform is designed to greater visibility, stability and ergonomics for increased operator confidence and comfort. The platform features a large upper visibility window. The clear-visibility mast, with full free-lift, extends both the upper and middle platform windows above the mast channels for unobstructed visibility when elevated.

An industry exclusive standard middle operator window provides unmatched power unit first visibility at height. Standard centre floor and side floor slot windows allow for easy viewing under the platform and of the outriggers while elevated. The SP 1520 features standard auxiliary mast windows which provide elevated forks first visibility below a raised load. An optional panoramic overhead guard provides unobstructed views above the truck while elevating.

The right-hand control set features a fixed, urethane covered handgrip. The handgrip has an integrated horn button and a thumbwheel for traction control. A paddle near the handgrip actuates lift and lower. This design optimises blending of functions without compromising operator stability. Traction, lift/lower and horn engagement can be seamlessly blended while maintaining a consistent solid point of contact. The left-hand control set features an industry exclusive tiller knob orientation adjustment which provides operator flexibility while still retaining a solid point of contact to bolster operator confidence. The tiller knob is angled at 10° to reduce steer effort in the vertical position. An optional 102 mm of independent height adjustability for the power unit facing controls provides even more operational flexibility and comfort.

The premium anti-fatigue platform cushion, made of a microcellular composition, absorbs shock and vibration. A 152 mm diameter brake pedal has a low-profile design that is flush with the platform cushion when engaged for maximum comfort. Heavy-duty side gates feature integrated gas struts for easy lifting and lowering as well as integrated padding for a comfortable leaning point when order picking. Both gates include a built-in bungee cord for quick access to pick labels or other frequently used paperwork. Standard interlock cutout switches disengage truck operation when the side gates are raised.

A light/fan package option, consisting of two work lights, two dome lights and two operator fans, provides enhanced operator comfort and confidence. Integrated Work Assist mounting rails in the platform structure provides flexibility in positioning accessories and work tools. A USB charging port, organiser bin and integrated storage compartments are also standard. A foot-applied and foot-released pallet clamp for use with pallets having centre stringers is also provided.

**Crown drive system**

A Crown-manufactured drive unit uses spiral bevel and helical gears from motor to drive wheel axle. A fixed, mounted traction motor does not rotate which minimises wear on electrical cables.

Standard linear height speed control provides smooth travel speed transitions as lift heights change, increasing productivity.

Standard OnTrac ani-slip traction control monitors truck dynamics, optimises tractive effort, reduces spinning during acceleration, prevents lock-up during braking and can extend tyre life. It improves traction performance in wet, dusty or cold storage conditions. This system enhances safety and operators work more productively due to increased confidence.

* Crown Lift Trucks with the Gena operating system are connected products. Please see for the data use policy to see more.

** Functional with an active InfoLink service plan.

### Intelligent steering

Crown's intelligent steering system slows the truck automatically when the tiller knob is turned beyond 12° enabling greater truck stability during turning. The Gena operating system monitors the height of the operator platform, truck speed and steering wheel position at all times. The tiller knob rotation provides smooth, operator feedback. Auto-centring of the drive tyre occurs at start-up.

### Intelligent braking

Crown's intelligent braking system combines variable plugging with a three-step friction brake to optimise safety and comfort for the operator. The appropriate level of braking is applied dependent upon platform height, direction of travel and truck weight. Braking force is automatically reduced as height increases and speed decreases. Optimum braking at height avoids abrupt stops and reduces platform sway. In addition, friction brake use is reduced, which prolongs brake life.

Proportional plugging permits the operator to control the rate of deceleration when extended stopping distance is preferred.

### Enhanced hydraulics

Heavy-duty AC pump motor and gear pump is assembled into an integral unit. Regenerative lowering, as well as variable lifting and lowering, are both standard on all voltage offerings.

Standard high-speed lift performance for the 48 V model, provide industry leading lift speeds.

The Xpress Lower option, which is available for all voltages, more than doubles the standard lowering speeds to add in the reduction of picking cycle times.

Hydraulic cylinder cushioning provides smooth and consistent lifting and lowering performance throughout the entire range of lift height which enhances operator comfort and confidence during operation.

### Crown mast assembly

High visibility two- and three-stage masts feature a nested rail design with lift cylinders positioned behind the mast rails. The three-stage mast has a compact centre cylinder yoke design for enhanced visibility in the power unit direction. Integrated mast guides between the channels provide smooth and quiet operation while travelling. Routing of hoses and cables optimises visibility throughout the mast. Built-in sensors detect chain slack and shut down primary lower function if chain slack is detected. Negative rail drop allows for shimming of mast rollers without major disassembly.

### Heavy-duty low profile power unit

Power unit is fabricated from heavy-gauge steel. Lower skirt is 19 mm steel that runs 228 mm high for component protection. Rugged steel doors suspended on heavy-duty pin hinges cover power unit componentry. Doors swing wide for open access. Doors can be lifted off for unrestricted service access. Door fastening bolts have exclusive convex design that mate with concave door holes for faster alignment and installation. Lift-off battery side covers are all steel. An optional battery retainer switch is available. Top battery access is available by lifting the cover. The cover has an integral support post. A standard panel is located behind the power unit doors to provide technicians with raise/lower functionality of the platform.

### Warning device options

Audible alerts

Safety considerations and dangers associated with audible travel alarms include:

- Multiple alarms can cause confusion.
- Workers ignore the alarms after day-in and day-out exposure.
- Operator may transfer the responsibility for "looking out" to the pedestrians.
- Annoys operators and pedestrians.

### Other options available

Contact factory for additional options.

Dimensions and performance data given may vary due to manufacturing tolerances.

Performance is based on an average size vehicle and is affected by weight, truck condition, how it is equipped and the conditions of the operating area. Crown products and specifications are subject to change without notice.

SP 1500 SPEC GB 07/25, 10
M03233-006-03
Printed in Germany

ISO 9001 Quality management system certified for the design, development, manufacture, sale and product support of industrial trucks.

European manufacturing:
Crown Gabelstapler GmbH & Co. KG
Продавец:
kupit-shtabeler.ru
+7 495 159-44-32
zakaz@kupit-shtabeler.ru