WF 3200
ST 3200
SX 3200
SERIES

Specifications

Pedestrian Powered Stacker

WF 3200

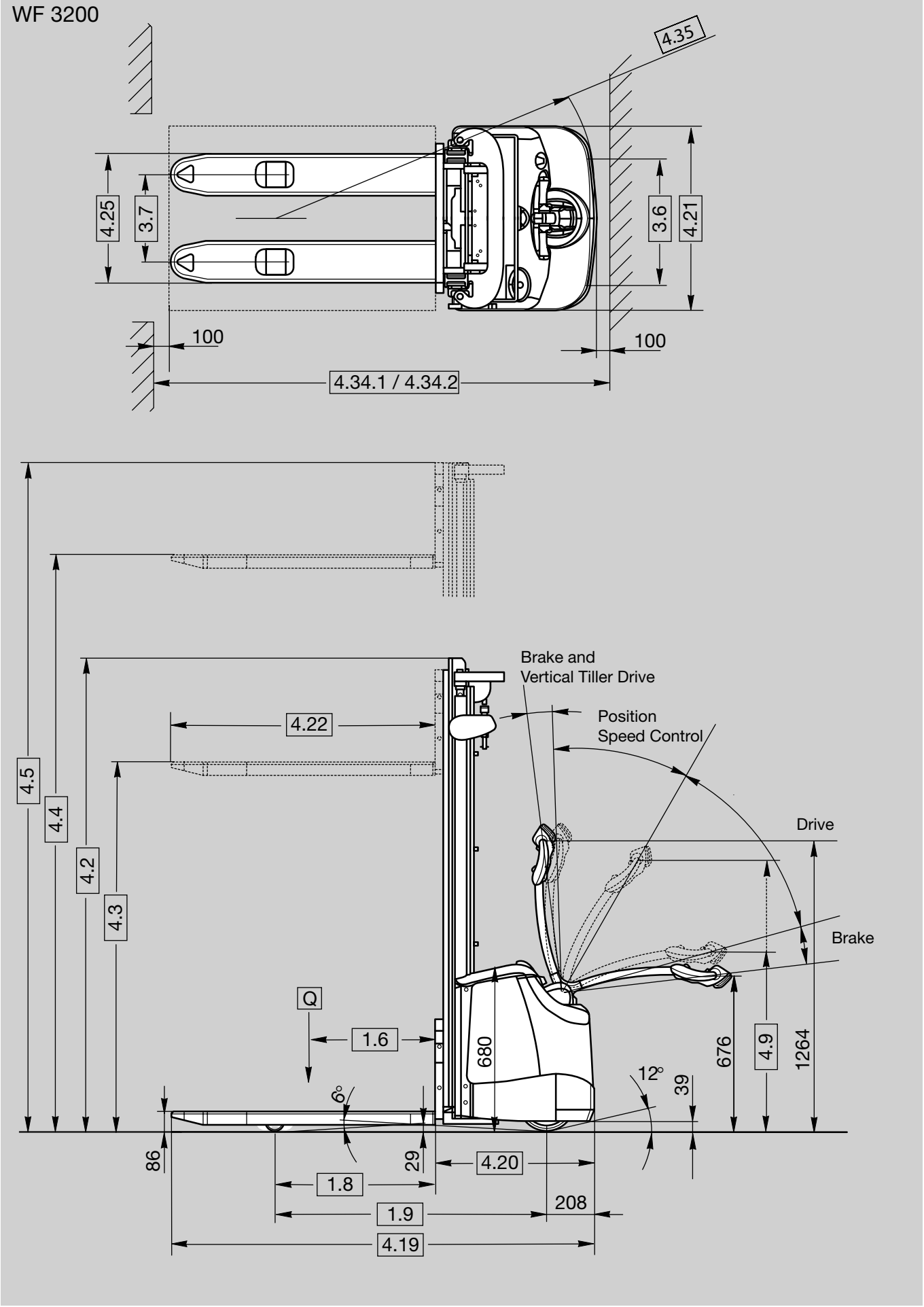
4.35
4.25
3.7
3.6
4.21
100
100
4.34.1 / 4.34.2
Brake and
Vertical Tiller Drive
Position
Speed Control
4.22
4.5
4.4
4.2
4.3
Drive
Brake
Q
1.6
680
676
4.9
1264
12°
39
6°
86
29
4.20
1.8
208
1.9
4.19

Destinguishing Mark	1.1	**Manufacturer**				Crown Equipment Corporation				
	1.2	**Model**				WF3200-1.0 NT	WF3200-1.0 TL	WF3200-1.0 TF	WF3200-1.2 TL	WF3200-1.2 TF
	1.3	**Power Source**				electric				
	1.4	**Operator Type**				pedestrian				
	1.5	**Rated Capacity**		Q	t	1.0			1.2	
	1.6	**Load Centre**		c	mm	600				
	1.8	**Load Distance**		x	mm	689				
	1.9	**Wheelbase**		y	mm	1182				
Weight	2.1	**Service Weight**	less battery		kg	see table 1				
	2.2	**Axle Load**	with Load front / rear 80 Ah MF		kg	564/1121	650/1198	659/1195	–	–
			160 Ah Ind.		kg	–	712/1212	721/1209	–	–
			180 Ah Ind.		kg	–	732/1216	741/1214	741/1407	751/1404
	2.3		without Load front / rear 80 Ah MF		kg	494/191	602/246	610/244	–	–
			160 Ah Ind.		kg	–	664/260	672/258	–	–
			180 Ah Ind.		kg	–	683/265	693/262	683/265	693/262
Tyres/Wheels/Chassis	3.1	**Tyres**				Rubber			Vulkollan	
	3.2	**Tyre Size**	front		mm	Ø 254 × 70			Ø 254 × 85	
	3.3		rear		mm	Ø 82 x 104				
	3.4	**Additional Wheels**	castor wheels		mm	Ø 140 x 54				
	3.5	**Wheels**	number (x=driven wheels) front/ rear			1x + 1/2				
	3.6	**Tread**	front	b_{10}	mm	510				
	3.7		rear	b_{11}	mm	382				
Dimensions	4.2	**Mast**	collapsed height	h_1	mm	see table 1				
	4.3	**Free-lift**		h_2	mm	see table 1				
	4.4	**Lift Height**		h_3	mm	see table 1				
	4.5	**Mast**	extended height	h_4	mm	see table 1				
	4.9	**Height Control Handle**	in driving position min./max.	h_{14}	mm	799 / 1181				
	4.15	**Fork Height**	lowered	h_{13}	mm	86				
	4.19	**Overall Length**		l_1	mm	1843				
	4.20	**Head Length**		l_2	mm	692				
	4.21	**Overall Width**	front	b_1	mm	805				
	4.22	**Fork Dimension**	DIN ISO 2331	thxwxl	mm	170x60x1150			186x60x1150	
	4.25	**Fork Spread**		b_5	mm	560				
	4.32	**Ground Clearance**	Centre Wheelbase	m_2	mm	29				
	4.34.1	**Aisle Width**	for Pallets 1000x1200 crossways	A_{st}	mm	2310				
	4.34.2	**Aisle Width**	for Pallets 800x1200 lengthways	A_{st}	mm	2243				
	4.35	**Turning Radius**		W_a	mm	1401				
Performance Data	5.1	**Travel Speed**	with / without Load		km/h	5.9 / 5.9			5.9 / 5.9	
	5.2	**Lift Speed**	with / without Load		m/s	0.12 / 0.22			0.11 / 0.22	
	5.3	**Lowering Speed**	with / without Load		m/s	0.42 / 0.23			0.40 / 0.23	
	5.7	**Gradeability**	w. / w.o. 30 min. rating		%	4.9 / 9.1			4.4 / 8.7	
	5.8	**Max. Gradeability**	w. / w.o. 5 min. rating		%	8.4 / 15.7			9.5 / 19.4	
	5.10	**Service Brake**				electric				
Electric Motor	6.1	**Traction Motor**	rating at S2 60 min.		kW	1.5			1.5	
	6.2	**Pump Motor**	rating at S3 10%		kW	2.2				
	6.3	**Max. Battery Box Size**	DIN 43535 L-shape	lxwxh	mm	111 / 210 x 784 x 537				
	6.4	**Battery Voltage**	Nominal Capacity 5h rating		V/Ah	2x12 / 80			24 / 180	
	6.5	**Battery Weight**	Nominal + 5%		kg	72			172	
	8.1	**Drive Unit**				transistor				

Table 1 Lift Height		**WF3200-1.0**												**WF3200-1.2**									
		NT		TL					TF					TL					TF				
4.2	**Mast**	1970	2400	1750	1970	2170	2400	2650	1750	1970	2170	2400	2650	1750	1970	2170	2400	2650	1750	1970	2170	2400	2650
4.3	**Free-lift**	1480	1970	180	180	180	180	180	1250	1470	1670	1910	2160	180	180	180	180	180	1250	1470	1670	1910	2160
4.4	**Lift Height**	**1550**	**2000**	**2500**	**2930**	**3330**	**3800**	**4300**	**2600**	**3030**	**3430**	**3900**	**4400**	**2500**	**2930**	**3330**	**3800**	**4300**	**2600**	**3030**	**3430**	**3900**	**4400**
4.5	**Mast extended**	1970	2400	2896	3326	3726	4196	4696	2996	3426	3826	4296	4796	2896	3326	3726	4196	4696	2996	3426	3826	4296	4796
2.1	**Weight less batt.**	598	619	696	717	736	759	785	702	723	742	765	790	697	718	737	760	784	703	724	743	766	789

* with optional load backrest: NT/TF mast - 804 mm **with optional load backrest: NT/TL/TF mast + 804 mm

ST / SX 3200

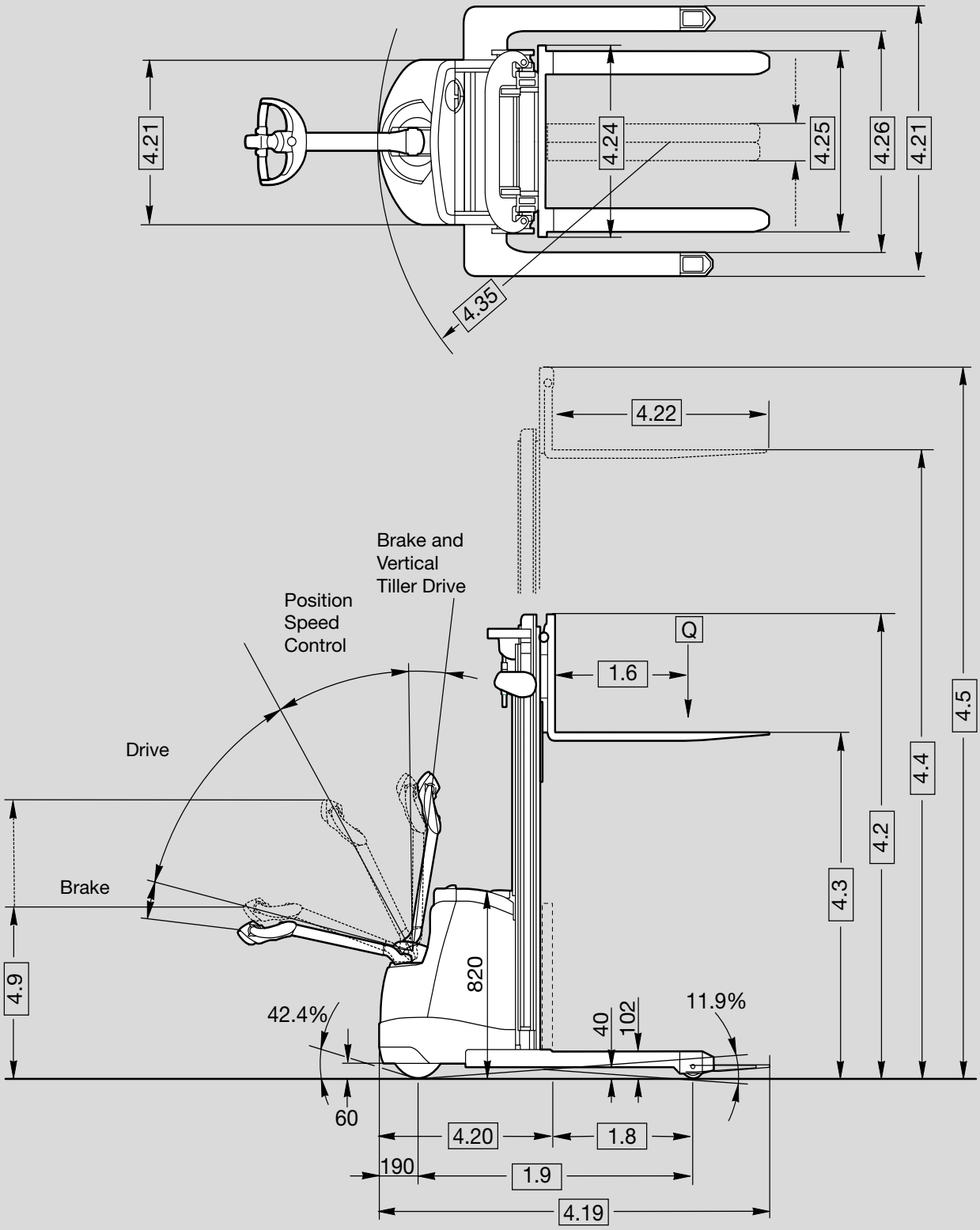
4.21
4.24
4.25
4.26
4.21
4.35
4.22
Brake and
Vertical
Tiller Drive
Position
Speed
Control
Q
1.6
4.5
Drive
4.4
4.2
Brake
4.3
4.9
820
42.4%
40
102
11.9%
60
4.20
1.8
190
1.9
4.19

Destinguishing Mark	1.1	**Manufacturer**				Crown Equipment Corporation			
	1.2	**Model**				ST3200N 1.0	ST3200 1.0	SX3200 1.35	SX3200 1.35
	1.3	**Power Source**				electric			
	1.4	**Operator Type**				pedestrain			
	1.5	**Rated Capacity**		Q	kg	1000		1350	
	1.6	**Load Centre**		c	mm	600			
	1.8	**Load Distance**		x	mm	621/603		686/666	
	1.9	**Wheelbase**		y	mm	1255		1362	
	2.1	**Service Weight**	less battery		kg	see table 1			
Tyres/Wheels/ Chassis	3.1	**Tyres**			mm	Rubber+Poly/Vulkollan		Vulkollan	
	3.2	**Tyre Size**	front		mm	Ø 254 × 100		Ø 254 × 85	
	3.3		rear		mm	Ø 4˝ x 102			
	3.4	**Additional Wheels**	castor wheels		mm	Ø 90 x 50			
	3.5	**Wheels**	number (x=driven wheels) front/ rear			1x +2 / 2			
Dimensions	4.2	**Mast**	collapsed height	h_1	mm	see table 1			
	4.3	**Free-lift**		h_2	mm	see table 1			
	4.4	**Lift Height**		h_3	mm	see table 1			
	4.5	**Mast**	extended height	h_4	mm	see table 1			
	4.9	**Height Control Handle**	in driving position min./max.	h_{14}	mm	790 / 1206			
	4.15	**Fork Height**	lowered	h_{13}	mm	51		50	
	4.19	**Overall Length**		l_1	mm	see table 2			
	4.20	**Head Length**		l_2	mm	see table 2			
	4.21	**Overall Width**	front	b_1	mm	712			
			rear	b_2	mm	inside straddle width + 152		inside straddle width + 204	
	4.22	**Fork Dimension**	DIN ISO 2331	thxwxl	mm	38 x 76 x 1145		38 x 102 x 1150	
	4.25	**Fork Spread**	adjustable min./max.	b_5	mm	232 - 765		252 - 785	
	4.26	**Inside Straddle Dimension**	infinite adjustment	b_4	mm	865-1165	965-1270	865-1165	965-1270
	4.32	**Ground Clearance**	Centre Wheelbase	m_2	mm	40			
	4.34.1	**Aisle Width**	for Pallets 1000x1200 crossways	A_{st}	mm	see table 2			
	4.34.2	**Aisle Width**	for Pallets 800x1200 lengthways	A_{st}	mm	see table 2			
	4.35	**Turning Radius**		W_a	mm	1446		1553	
Performance Data	5.1	**Travel Speed**	with / without Load		km/h	5.9 / 5.9		5.9 / 5.9	
	5.2	**Lift Speed**	with / without Load		m/s	0.12 / 0.20		0.14 / 0.24	
	5.3	**Lowering Speed**	with / without Load		m/s	0.22 / 0.22		0.30 / 0.26	
	5.7	**Gradeability**	w. / w.o. 30 min. rating		%	4.9 / 9.1		4.4 / 8.7	
	5.8	**Max. Gradeability**	w. / w.o. 5 min. rating		%	8.4 / 15.7		9.5 / 19.4	
	5.10	**Service Brake**				electric			
Electric Motor	6.1	**Traction Motor**	60 min. rating		kW	1.5			
	6.2	**Pump Motor**			kW	2.2		3.0	
	6.3	**Max. Battery Box Size**	DIN 43535 / A	lxwxh	mm	185 x 649 x 613		230 x 670 x 600	
	6.4	**Battery Voltage**	Nominal Capacity 5h rating		V/Ah	2x12 / 80		4x6 / 200	
	6.5	**Battery Weight**	Nominal + 5%		kg	60		121	
	8.1	**Drive Unit**				transistor			

Table 1 Lift Height				**ST 3200 / SX 3200**						
				TL					TT	
4.2	**Mast**	collapsed height	mm	1700	1910	2110	2350	2600	1858	1858
4.3	**Free-lift**		mm	150					1422	1422
4.4	**Lift Height**		**mm**	**2400**	**2820**	**3220**	**3700**	**4200**	**3900**	**4250**
4.5	**Mast**	extended height	mm	2910	3330	3730	4210	4710	4410	4760
2.1	**Weight**	ST less battery	kg	792	810	828	849	871	847	847
2.1	**Weight**	SX less battery	kg	955	973	991	1012	1034	1071	1071

Table 2 Aisle width with dimension (VDI 2198)				**ST 3200**		**SX 3200**	
				TL	TT	TL	TT
4.19	**Overall Length**		mm	1975	1993	2017	2037
4.20	**Headlength**		mm	825	843	867	887
4.34.1	**Aisle Width**	traverse 800x1200	mm	2360	2360	2489	2489
		1000x1200	mm	2356	2364	2489	2489
4.34.2	**Aisle Width**	traverse 1200x800	mm	2350	2364	2404	2420
		1200x1000	mm	2411	2425	2470	2485

Electric System / Batteries
24-volt electrical system with nominal battery capacities up to 222 Ah.

Standard Equipment
1. Maintenance free 3-phase (AC) traction
2. e-GEN® Braking System offers regenerative and frictionless electric braking. Mechanical braking applies only as parking brake
3. The X10® Control Handle places all truck functions at the operator's fingertips
4. Batteries
   - WF 1.0 and ST: 80 Ah maintenance free
   - WF 1.2 and SX: 180 Ah wet industrial
   - SX: 200 Ah maintenance free
5. DIN 80A Rema battery connector
6. Onboard 30A solid state charger
7. Drive tyre
   - WF 1.0 and ST: Rubber
   - WF 1.2 and SX: Vulkollan
8. Vukollan Load Wheels
9. Castor Wheels
10. Ramp hold
11. Adjustable outriggers (ST and SX)
12. Polycarbonate mast guard
13. Storage tray above battery
14. Battery discharge indicator with lift lockout and integrated hour meter and fault code readout
15. Fork tip indicators
16. Key Switch
17. Rabbit/turtle switch incorporates two levels of programmable travel performance
18. Proportional lifting/lowering
19. Position Speed Control
20. Vertical Tiller Drive

Optional Equipment
1. Drive tyre
   - WF 1.0 and ST: Vulkollan and Supertrac
   - WF 1.2 and SX: Rubber and Supertrac
2. Tandem load wheels
3. Load backrest
   - WF: 750 x 1200 mm
   - ST / SX: 832 x 1200 mm
4. Battery options: Maintenance free, wet industrial or lithium-ion
5. Battery connector SBE 160 red
6. Freezer conditioning
7. Side shifter (SX)
8. Flashing light
9. Travel alarm
10. Work Assist options
11. Fork length and fork spread options
12. Special paint
13. InfoLink® Ready
14. Keypad
15. Lithium-Ion Battery Ready

Electrical System
24-volt fused electrical system with built in 30-amp charger. This premium fan-cooled, solid-state charger is durable and efficient. It has an advanced memory feature to allow for opportunity charging and can be set for either maintenance free or industrial batteries. A retractable power cord is standard.

Operator Area and Controls
The X10® Control Handle, designed for simultaneous operation of all functions with one hand, improves side-stance operation for maximum visibility in both driving directions. An ergonomic forward/reverse thumb wheel allows for precise manoeuvring. The hand grips are urethane covered for insulation from cold and vibration with integrated horn buttons for easy activation.

A rabbit/turtle switch incorporates two levels of programmable travel performance so operators can select the setting that matches their experience level or application requirements. Proportional lift and lowering allows easy and precise positioning of loads. The fast responsiveness and speeds of the lifting and lowering functions are designed to ensure high efficiency in all applications and all this together at a low noise level.

Position Speed Control
When operating in tight spaces such as retail stores with narrow aisles or inside lorries and elevators, the operator can move the tiller from the Travel zone to the Position Speed Control zone. The travel speed in fork direction will then be automatically reduced to 1.5 km/h without the need to come to a halt and a further command from the operator. This ensures a smooth and productive workflow while avoiding unintentional interruptions.

Vertical Tiller Drive
The Vertical Tiller Drive function goes one step beyond. When activated, the truck can be moved at up to 1.5 km/h even in the upper braking zone by simply keeping the travel switch pressed in the desired direction. Reducing the turning radius of the truck, the system enables operators to easily move pallets while reducing goods damage cost.

e-GEN® Braking System
The power of the high-torque AC traction motor is used to stop the truck and keep it static until a travel input is requested, even when operating on a gradient.

This system eliminates adjustments and wear points for a lifetime of maintenance free use. An automatic parking brake activates if the truck is stopped and the operator leaves the platform or power is disconnected.

Chassis
All models feature a heavy gauge one-piece welded steel frame backed by a lifetime warranty. Removable steel covers protect all critical system components. The low-profile power unit has been optimised to provide the best fork tip visibility available.

Safety Regulations
Conforms to European safety standards.
Dimensions and performance data given may vary due to manufacturing tolerances. Performance is based on an average size vehicle and is affected by weight, condition of truck, how it is equipped and the conditions of the operating area. Crown products and specifications are subject to change without notice.

WF/ST/SX SPEC GB 08/25, 10
Printed in Germany

ISO 9001 Quality Management System certified for the design, development, manufacture, sale and product support of industrial trucks.

European Manufacturing:
Crown Gabelstapler GmbH & Co. KG
Продавец:
kupit-shtabeler.ru
+7 495 159-44-32
zakaz@kupit-shtabeler.ru