Технические данные EFX 410 / 413

JUNGHEINRICH · редакция 07/2023
Язык: EN

После этой обложки приведён заводской технический документ без изменения его страниц. Таблицы серии могут содержать несколько мачт и аккумуляторных исполнений; они не подтверждают комплектацию конкретной поставки.

Перед использованием сверьте модель, исполнение и редакцию документа с заводской табличкой и документацией вашей машины. Материал серии не является заполненным индивидуальным паспортом.

Продавец и подбор техники

kupit-shtabeler.ru
zakaz@kupit-shtabeler.ru
+7 495 159-44-32

Эта страница добавлена продавцом. Изготовитель, авторские права, заводская маркировка и техническое содержание оригинала сохранены. Контакты продавца не заменяют сведения изготовителя.

LI-ION technology

Electric front seat / tri-lateral stacker
EFX 410 / 413

Lift height: 3000-7000 mm / Load capacity: 1000-1250 kg

JUNGHEINRICH

EFX 410 / 413

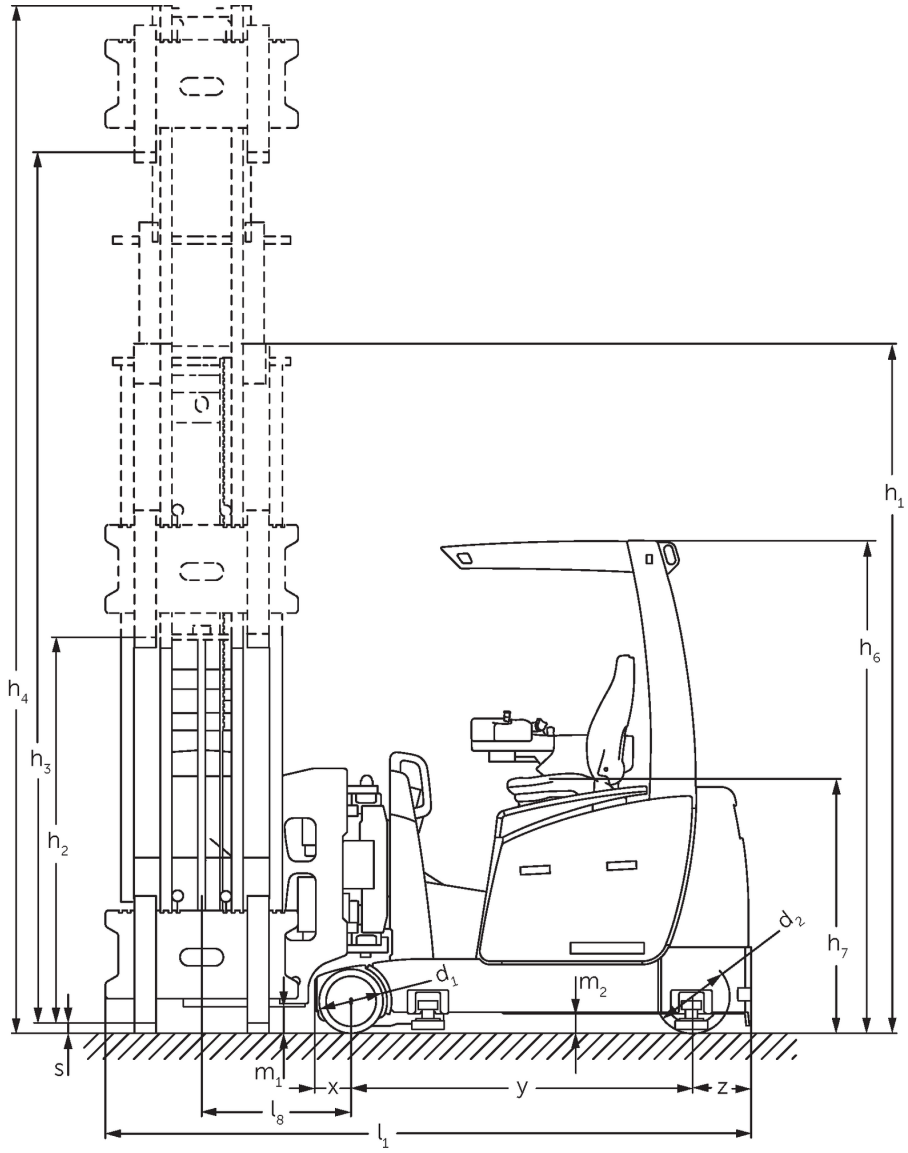
h1
h6
h4
h3
h2
h7
d2
d1
m2
s
m1
x
y
z
l8
l1

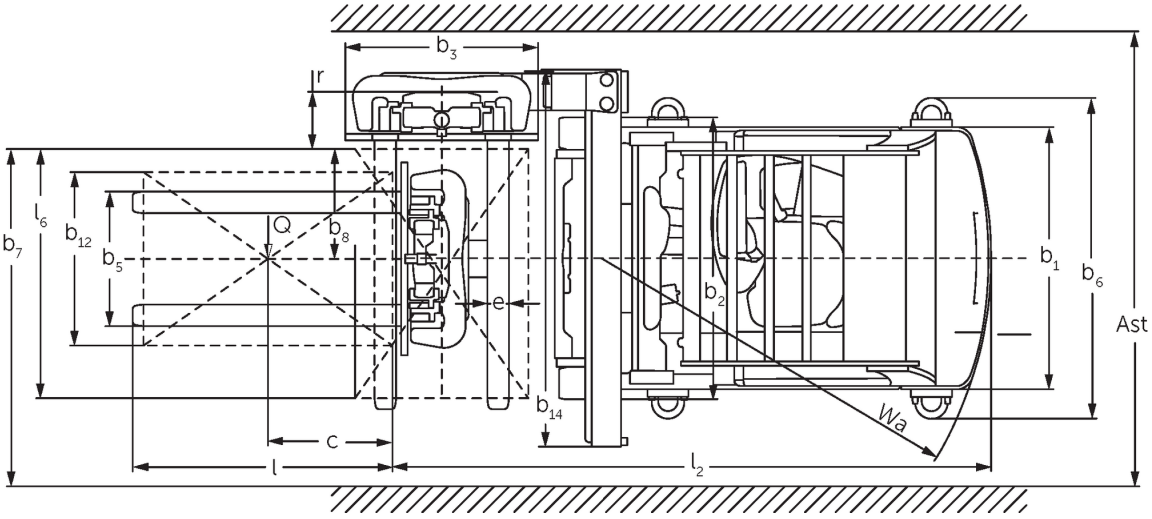
b3
r
l6
b7
b12
b5
Q
b8
e
b2
b1
b6
Ast
b14
Wa
c
l
l2

EFX 410 / 413

EFX 410, EFX 413	Lift (h3)	Retracted mast height (h1)	Free lift (h2)	Extended mast height (h4)
Duplex mast ZT	**3000 mm**	**2305 mm**	**66 mm**	**3772 mm**
	3250 mm	2430 mm	66 mm	4022 mm
	3500 mm	2555 mm	66 mm	4272 mm
	3750 mm	2680 mm	66 mm	4522 mm
	4000 mm	2805 mm	66 mm	4772 mm
	4250 mm	2930 mm	66 mm	5022 mm
	4500 mm	3055 mm	66 mm	5272 mm
	4750 mm	3250 mm	66 mm	5592 mm
	5000 mm	3375 mm	66 mm	5842 mm
	5250 mm	3500 mm	66 mm	6092 mm
	5500 mm	3625 mm	66 mm	6342 mm
	5750 mm	3750 mm	66 mm	6592 mm
	6000 mm	3875 mm	66 mm	6842 mm
Triplex mast DZ	**4000 mm**	**2100 mm**	**1410 mm**	**4690 mm**
	4250 mm	2190 mm	1500 mm	4940 mm
	4500 mm	2280 mm	1590 mm	5190 mm
	4750 mm	2370 mm	1680 mm	5440 mm
	5000 mm	2460 mm	1770 mm	5690 mm
	5250 mm	2550 mm	1860 mm	5940 mm
	5500 mm	2640 mm	1950 mm	6190 mm
	5750 mm	2730 mm	2040 mm	6440 mm
	6000 mm	2820 mm	2130 mm	6690 mm
	6250 mm	2910 mm	2220 mm	6940 mm
	6500 mm	3000 mm	2310 mm	7190 mm
	6750 mm	3090 mm	2400 mm	7440 mm
	7000 mm	3180 mm	2490 mm	7690 mm

VDI table

Stand-on: 07/2023

Characteristic	1.1	Manufacturer (abbreviated description)			Jungheinrich	
	1.2	Manufacturer's type designation			**EFX 410**	**EFX 413**
	1.3	Drive			Electric	
	1.4	Operation			Tri-lateral stacker	
	1.5	Load capacity/load	Q	kg	1000	1250
	1.6	Load centre distance	c	mm	600	
	1.8	Load distance, centre of drive axle to fork	x	mm	168	
	1.9	Wheelbase	y	mm	1577	
	1.10	Mitte Antriebsrad/Gegengewicht	z	mm	270	
Weights	2.1.1	Service weight (incl. battery)		kg	5080	5360
	2.2	Axle load laden front/rear		kg	4860 / 1300	5370 / 1320
	2.3	Axle load unladen front/rear		kg	3230 / 1850	3340 / 2020
Wheels/suspension system	3.1	Tyres			Vulkollan ®	
	3.2	Tyre size, front			Ø 295 x 144	
	3.3	Tyre size, rear			Ø 343 x 110	
	3.5	Wheels, number front/back (x=driven)			2 / 1x	
	3.6	Tread width, front	b_{10}	mm	1406	
Basic dimensions	4.2	Retracted mast height (h1)	h_1	mm	2805	
	4.3	Free lift (h2)	h_2	mm	66	
	4.4	Lift (h3)	h_3	mm	4000	
	4.5	Extended mast height (h4)	h_4	mm	4772	
	4.7	Height of overhead guard (cab)	h_6	mm	2277	
	4.8	Seat height/stand height	h_7	mm	1205	
	4.19	Overall length	l_1	mm	3134	
	4.20	Length including fork shank	l_2	mm	2957	
	4.21.1	Overall width	b_1	mm	1210	
	4.21.2	Overall width	b_2	mm	1550	
	4.22	Fork dimensions	s/e/l	mm	40 x 100 x 1200	
	4.23	Fork carriage connection class			2B	
	4.24	Fork carriage width	b_3	mm	890	
	4.25	Width across forks	b_5	mm	850	
	4.27	Width over guide rollers	b_6	mm	1600	
	4.29	Reach, lateral		mm	1370	
	4.30	Reach, lateral from centre of truck		mm	420	
	4.31	Ground clearance laden under mast	m_1	mm	120	
	4.32	Ground clearance centre of wheelbase	m_2	mm	85	
	4.35	Turning radius	W_a	mm	1847	
	4.38	Distance swivelling fork pivot point		mm	843	
	4.38.4	Pallet width		mm	1200	
	4.38.5	Pallet length		mm	1200	
Performance data	5.1	Travel speed laden/unladen		km/h	9 / 9	
	5.2	Lift speed laden/unladen		m/s	0.41 / 0.41	
	5.3	Lowering speed laden/unladen		m/s	0.44 / 0.44	
	5.4	Reach speed laden/unladen		m/s	0.2 / 0.2	
	5.10	Service brake			regenerative	
	5.11	Parking brake			Electric sprung-loaded	

E-motor/ Electronics	6.1	Drive motor, performance S2 60 min	kW	6.9	
	6.2	Lift motor, performance with S3	kW	9.5	
	6.3	Battery according to DIN 43531/35/36		5 PzS 625	6 PzS 750
	6.4	Battery voltage/nominal capacity	V / Ah	48 / 625	48 / 750
	6.5	Battery weight	kg	855	1010
Other	8.1	Type of drive control		AC drive control system	
	10.5	Steering version		electric	
	10.7	Sound level as per EN12053, operator's ear	dB (A)	66.5	

- This data sheet according to VDI guideline 2198 only states the technical values of the standard truck. Different tyres, other masts, additional equipment etc. may result in different values.

The German production facilities in Norderstedt, Moosburg and Landsberg are certified as well as our Genuine Parts Center in Kaltenkirchen.

ISO 9001
ISO 14001

Jungheinrich fork lift trucks meet European safety requirements.

CE

JUNGHEINRICH