MPC 3000
SERIES

Specifications
Order Picker with Mast

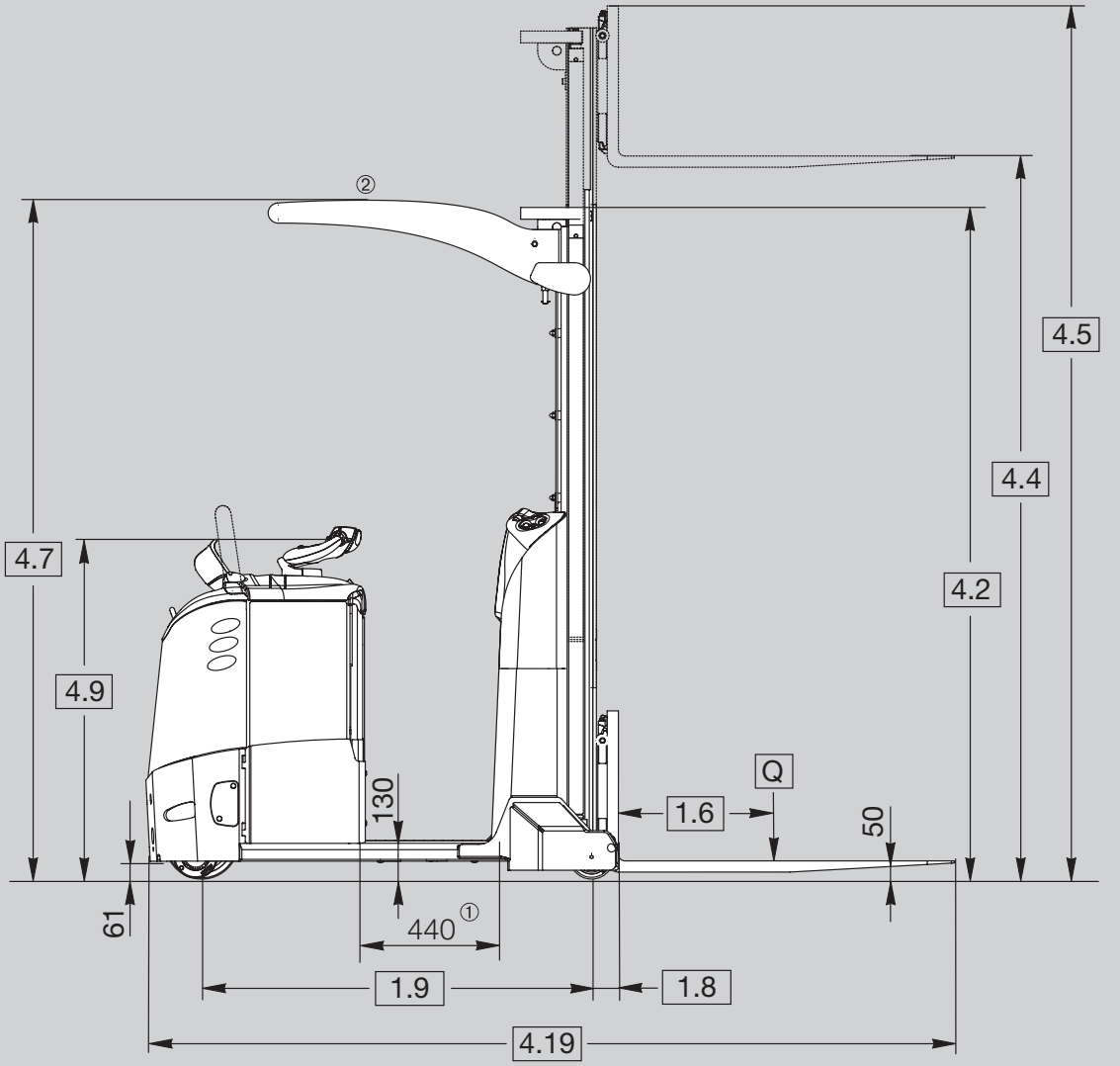

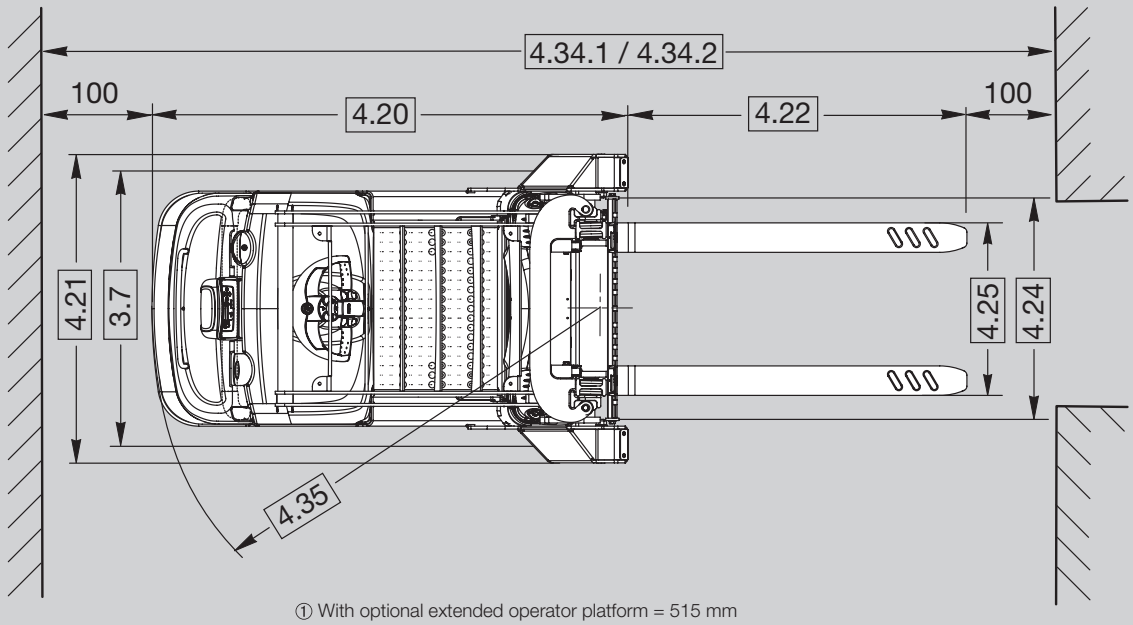

① With optional extended operator platform = 515 mm
② OHG on TL and TF masts only

Destinguishing Mark	1.1	**Manufacturer**	Crown Equipment Corporation			
	1.2	**Model**				MPC 3040 - 1.2
	1.3	**Power Source**				electric
	1.4	**Operator Type**				stand-on
	1.5	**Rated Capacity**		Q	kg	1200
	1.6	**Load Centre**		c	mm	600
	1.8	**Load Distance**		x	mm	93
	1.9	**Wheelbase ***		y	mm	1327
Weight	2.1	**Service Weight**	less battery		kg	see table 1
	2.2	**Axle Load**	with load front / rear		kg	see table 1
	2.3		without load front / rear		kg	see table 1
Tyres/Wheels/ Chassis	3.1	**Tyres**				Vulkollan
	3.2	**Tyre Size**	front		mm	Ø 250 x 75
	3.3		rear		mm	Ø 150 x 100
	3.5	**Wheels**	number front/rear (x = driven wheels)		mm	1x / 2
	3.6	**Tread**	front	b_{10}	mm	centric
	3.7		rear	b_{11}	mm	936
Dimensions	4.2	**Mast Collapsed Height**		h_1	mm	see table 1
	4.3	**Free-lift**		h_2	mm	see table 1
	4.4	**Lift Height**		h_3	mm	see table 1
	4.5	**Mast Extended Height**		h_4	mm	see table 1
	4.7	**Overhead Guard Height**		h_6	mm	see table 1
	4.8	**Seat relating to SIP/Stand Height**		h_7	mm	130
	4.9	**Height Control Handle in Driving Position**		h_{14}	mm	1160
	4.15	**Fork Height**	lowered	h_{13}	mm	50
	4.19	**Overall Length ***		l_1	mm	2746
	4.20	**Head Length ***		l_2	mm	1616
	4.21	**Overall Width**		b_1/b_2	mm	1063
	4.22	**Fork Dimension**	DIN ISO 2331	s x e x l	mm	40 x 100 x 1150
	4.23	**Fork Carriage**	ISO 2328, class/type A, B			2A
	4.24	**Fork Carriage Width**		b_3	mm	770
	4.25	**Fork Spread**	min. – max.	b_5	mm	213 – 745
	4.31	**Ground Clearance**	with load, below mast	m_1	mm	51
	4.32		centre wheelbase	m_2	mm	61
	4.34.1	**Aisle Width ***	pallet 1000x1200 crossways	Ast	mm	2970
	4.34.2		pallet 800x1200 lengthways	Ast	mm	3075
	4.35	**Turning Radius ***		Wa	mm	1522
Performance Data	5.1	**Travel Speed**	w./w.o. load, power unit first		km/h	6.0 / 12.5
	5.2	**Lift Speed**	w./w.o. load		m/s	0.15 / 0.23
	5.3	**Lowering Speed**	w./w.o. load		m/s	0.34 / 0.37
	5.8	**Max. Gradeability**	w./w.o. load 5 min. rating		%	9 / 12
	5.10	**Service Brake**				electric
Electric Motor	6.1	**Traction Motor**	rating at S2 60 min.		kW	4.0
	6.2	**Pump Motor**	rating at S3 9 %		kW	3.0
	6.3	**Max. Battery Box Size**	DIN 43535	l x b x h	mm	330 x 790 x 784
	6.4	**Battery Voltage**	nominal capacity K5		V/Ah	24 / 620
	6.5	**Battery Weight**			kg	465 - 534
	8.1	**Drive Unit**	drive			transistor

Table 1 – Mast

1.2	**Model**				**MPC 3040 - 1.2**														
	Mast Type				**NT**			**TL**					**TF**						
2.1	**Weight ****	less battery		kg	1376	1399	1411	1623				1649	1618					1643	
2.2	**Axle Load ****	w. load	front	kg	408	409	409	440				442	439					440	
			rear	kg	2671	2693	2705	2886				2910	2882					2906	
2.3		w.o. load	front	kg	1037	1038	1038	1073				1099	1068					1069	
			rear	kg	829	851	863	1040				1040	1040					1064	
4.2	**Mast**	collapsed height	h_1	mm	1500	1920	2260	2350				2600	2350					2600	
4.3	**Free Lift**	w.o. lbr	h_2	mm	–	1400	1750	150				150	1835					2085	
		w. lbr	h_2	mm	–	710	1050						1135					1385	
4.4	**Lift Height**		h_3	mm	**800**	**1430**	**1780**	**2700**	**2900**	**3300**	**3700**	**4200**	**2700**	**2900**	**3300**	**3700**	**3800**	**4150**	**4300**
4.5	**Mast ext. Height**	w.o. lbr	h_4	mm	1500	1940	2290	3210	3410	3810	4210	4710	3130	3330	3730	4130	4325	4580	4825
		w. lbr	h_4	mm	2240	2640	2990	3910	4110	4510	4910	5410	3920	4120	4520	4920	5020	5370	5520
4.7	**OHG Height**		h_6	mm	–	–	–	2315				2565	2335					2585	

* With optional extended operator platform + 75 mm
** Value with optional extended operator platform

Electric System/Batteries
24-volt electrical system with nominal battery capacities up to 620 Ah. The battery can be removed vertically or horizontally with optional battery rollers for left/right removal.

Standard Equipment
1. Crown maintenance-free 3-phase (AC) traction motor. Maintenance-free 3-phase (AC) steering motor
2. e-Gen® Braking System offers regenerative and frictionless electric braking (mechanical braking applies only as parking brake)
3. Electronic steering with the centre-mounted X10® Handle for precise and effortless control
4. The self-centering X10 Handle places all truck functions at the operator's fingertips
5. Crown Access 1 2 3® Comprehensive System Control
6. Comfort backrest includes
   - soft moulded lean pad
   - 2 large storage bins
   - backrest grab handles
7. Crown's Information Display
   - 1 line LC-Display with 8 characters
   - Battery discharge indicator
   - Keyless start up with PIN code
   - Start up and run time diagnostics
   - 3 selectable traction performance profiles
   - Hour meters including traction motor and run time
   - Access 1 2 3® on-board diagnostic with real time troubleshooting capabilities
8. CAN-Bus technology
9. Ramp hold
10. Low step height of 130 mm with a 440 mm wide walk-through area
11. Suspended floorboard with a non-slip anti-fatigue floor mat with integrated presence sensors
12. Electric power disconnect plug
13. Mutliple storage compartments
    - Large front storage tray
    - Large storage compartments in the backrest
    - 2 large storage bins in the backrest
    - Central storage tray
    - 3 storage pockets in battery area
14. Two cords on each side of desktop surface to fix paperworks
15. Vulkollan drive tyre and load wheels
16. Battery connector DIN 160 A
17. Heavy-duty power unit
    - 10 mm thick steel skirt
    - Easily removable reinforced steel covers
    - Top battery access
18. Proportional lifting/lowering provided by a low-noise hydraulic system
19. Polycarbonate mast guard
20. Heavy-duty overhead guard (lift height ≥ 1800 mm)
21. Soft contoured backrest

Optional Equipment
1. Load backrest
2. Backrest grab bar
3. Metal mast grill
4. Adjustable fold-down lean seat
5. Lift/lower buttons in backrest
6. Battery roll out for left/right or both sides
7. SBE 160 red battery connector
8. 12/24 V power supply for electronic tools
9. Cold storage conditioning
10. Front Work Assist™ accessory tube with or without cable management
11. Work Assist™ Accessories
    - Load tray
    - Foil roll holders
    - Storage pockets
    - Beverage holder
    - Trash bag holder
    - Scan gun holder
    - Small, medium and large clip boards
    - Mounting brackets for WMS terminals
12. Audible travel alarm
13. Flashing beacon
14. Warning light
15. Rubber bumper
16. Key switch
17. Key pad
18. Extended platform length with 515 mm walk-through area
19. Supertrac drive tyre Ø 250 x 75 mm
20. InfoLink® Ready
21. Lithium-Ion Battery Ready
22. Polycarbonate protection for overhead guard
23. Mirror
24. Universal magnetic storage tray
25. Soft writing mat
26. Folding step (NT Mast)
27. QuickPick® Remote Ready
28. Cushioned soft kneepad
29. Paint options
30. USB Charging Port

Electrical
24 Volt electrical system managed by Crown's Access 1 2 3® Comprehensive System Control. Virtually maintenance-free AC Crown traction motor provides strong acceleration and control at any speed. Sensors monitor functional parameters including steering, lift height, speed and operator position and adjust operational settings automatically to suit conditions.

Power Unit
The rugged power unit is designed for tough real-world applications.
A 10 mm thick skirt protects the drive unit while a reinforced steel cover protects all electronics. The uncluttered layout of components provides quick and easy access for servicing.

Operator Area and Controls
The comfortable suspension features a fully suspended floorboard with a soft mat that reduces operator fatigue. Wide walk-through compartment with rounded surfaces provides a convenient shortcut even while carrying boxes. Contoured lean pad helps the operator stay centred in the truck while providing a soft contact surface to lean against. Multiple storage pockets provide locations for tools and personal effects.

All truck functions are controlled by the award-winning X10 Handle that allows simultaneous operation of all functions with one hand. Electronic steering is standard, providing precise, predictable control. A large information display provides battery discharge level, operational status and service messages to the operator.

Hydraulic System
Heavy-duty hydraulic motor with integral pump and reservoir for maximum efficiency and durability delivers fast lift and lower speeds at minimum noise level. The hydraulic control module (HCM) provides quick, smooth initiation and stopping of lift function. Relief valve tuned to capacity protects all components in the hydraulic system.

Mast
High-visibility mast design features I-beams and canted rollers. Lift cylinders are positioned in outer I-beam profile for best visibility through the mast and clear view onto the forks tips during load handling. Mast cushioning between staging ensures smooth operation. Heavy-duty mast and chain rollers are sealed and lubricated for life. Cylinder rods are hard-chrome plated with polyurethane seals. Mast design allows easy access to carriage rollers.

Access 1 2 3® Comprehensive System Control
Crown's Access 1 2 3® technology provides optimum performance and control by offering a communications interface for the operator and service engineer, intelligent coordination of truck systems and simplified service with advanced diagnostics. The display includes a full featured on-board service tool, so servicetechnicianss can actively view inputs and outputs during truck operation. No laptop or service terminal is required. Performance tuning can be accessed at the display to customise truck performance for specific applications or operator requirements.

e-GEN® Braking System
The power of the high-torque AC Crown traction motor is used to stop the truck and keep it static until a travel input is requested, even when operating on a gradient.
This system eliminates adjustments and wear points for a lifetime of maintenance-free use.
An automatic parking brake activates if the truck is stopped and the operator leaves the platform or power is disconnected.

Work Assist™ Accessories
A comprehensive range of Work Assist™ accessories is available to support every kind of picking and administrative task. These rugged tools can be easily combined and positioned in the location best suited to the application and the user. Customer accessories can also be added using the universal clamp and adapter plate. Two front Work Assist™ accessory tubes are available for mounting the accessories, one with and one without cable management.

Safety Regulations
Conforms to European safety standards. Dimensions and performance data given may vary due to manufacturing tolerances. Performance is based on an average size vehicle and is affected by weight, condition of truck, how it is equipped and the conditions of the operating area. Crown products and specifications are subject to change without notice.

MPC 3000 SPEC GB 01/25, 10
M03510-006-02
Printed in Germany

ISO 9001 Quality Management System certified for the design, development, manufacture, sale and product support of industrial trucks.

European Manufacturing:
Crown Gabelstapler GmbH & Co. KG
Продавец:
kupit-shtabeler.ru
+7 495 159-44-32
zakaz@kupit-shtabeler.ru