C-G

3,500 - 5,500 kg Capacity

Specifications

LPG Counterbalance Lift Truck

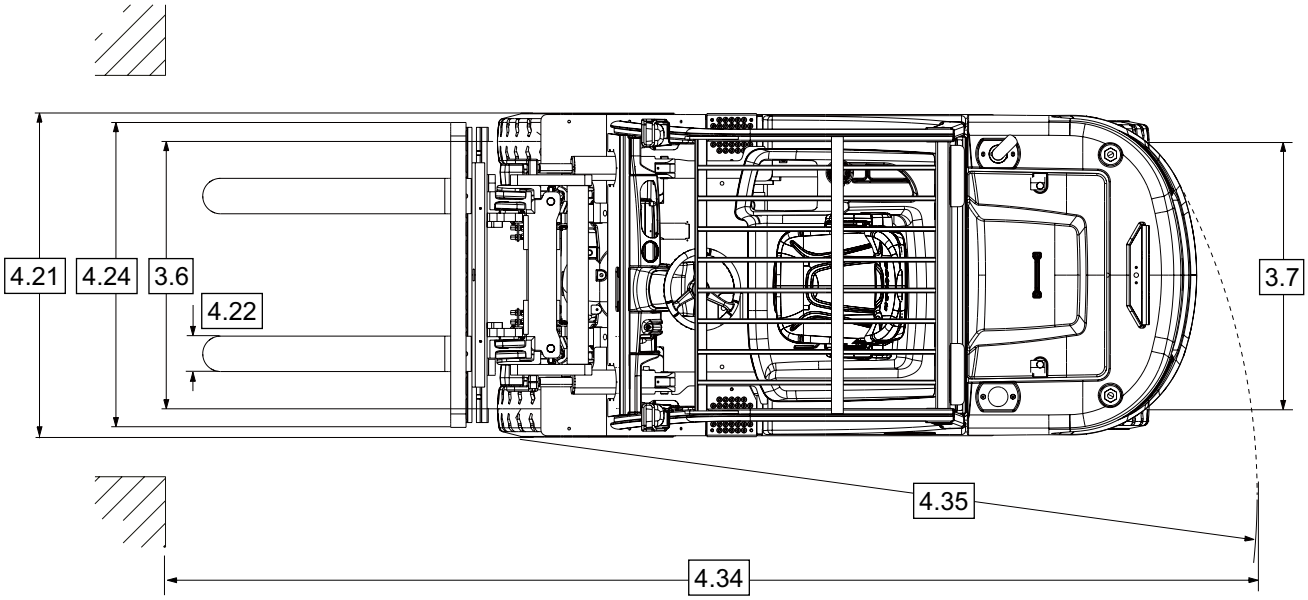
4.21
4.24
3.6
4.22
3.7
4.35
4.34

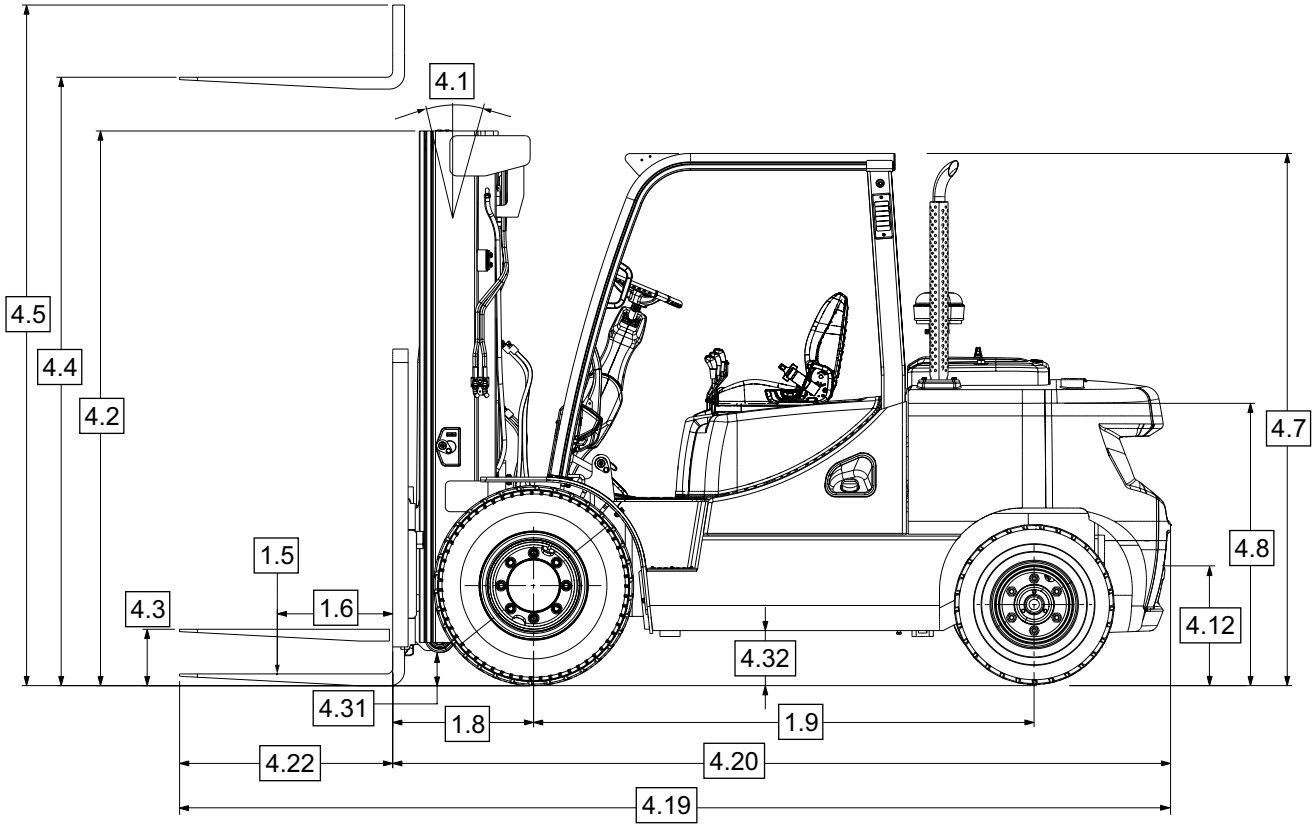
4.1
4.5
4.4
4.2
4.7
4.8
1.5
4.3
1.6
4.12
4.32
4.31
1.8
1.9
4.22
4.20
4.19

C-G 35-55 Series Specifications

Distinguishing Mark	1.2	**Model**				**C-G 35 S-7**	**C-G 40 S-7**	**C-G 45 S-7**	**C-G 50 C-7**	**C-G 55 C-7**	**C-G 40 SC-7**	**C-G 45 SC-7**	**C-G 50 SC-7**	**C-G 55 SC-7**
	1.3	**Power Source**	Electric, Diesel, LPG, Gasoline			LPG			LPG					
	1.4	**Operator Type**				Sit-down Rider Counterbalance			Sit-down Rider Counterbalance					
	1.5	**Rated Capacity**		Q	t	3.5	4.0	4.5	5.0	5.5	4.0	4.5	5.0	5.5
	1.6	**Load Centre**		c	mm	600			600		500			
	1.8	**Load Distance**	Center of wheel to fork face	x	mm	560			570		560			570
	1.9	**Wheelbase**		y	mm	2000		2100	2100		2000		2100	
Weight	2.1	**Service Weight**			kg	5790	6180	6550	7050	7390	5790	6180	6550	7050
	2.2	**Axle Load**	With load front / rear		kg	8215/1075	8980/1200	9800/1250	10680/1370	11370/1520	8215/1075	8980/1200	9800/1250	10680/1370
	2.3	**Axle Load**	Without load front / rear		kg	2685/3105	2660/3520	2810/3740	2890/4160	2800/4590	2685/3105	2660/3520	2810/3740	2890/4160
Tyres/Wheels/Chassis	3.1	**Tyres**				Pneumatic			Pneumatic					
	3.2	**Tyre Size**	Front, OD x Width x Rim Dia.		mm	8.25X15-14PR/ 7.50X16-12PR	300X15-18PR/ 7.50X16-12PR		300X15-18PR/ 7.50X16-12PR		8.25X15-14PR/ 7.50X16-12PR	300X15-18PR/ 7.50X16-12PR		
	3.3	**Tyre Size**	Rear, OD x Width x Rim Dia.		mm	7.00X12-12PR			7.00X12-14PR		7.00X12-12PR			7.00X12-14PR
	3.5	**Wheels**	Number (x=driven) front/rear			2x / 2				2x / 2				
	3.6	**Tread**	Front	b_{11}	mm	1138 / 1290	1153 / 1290		1153 / 1290		1138 / 1290	1153 / 1290		
	3.6	**Tread**	Rear	b_{12}	mm	1115			1115					
Dimensions	4.1	**Mast Tilt, Fork Carriage**	Forward / backward	α / β	°	8 / 10			8 / 10					
	4.2	**Mast Collapsed Height**		h_1	mm	2225	2230		2380		2225	2230		2380
	4.3	**Free-lift**		h_2	mm	160			170		160			170
	4.4	**Lift Height**		h_3	mm	3000			3050		3000			3050
	4.5	**Mast Extended Height**		h_4	mm	4265	4270	4420	4470		4265	4270	4420	4470
	4.7	**Overhead Guard Height**		h_6	mm	2225	2230		2230		2225	2230		
	4.8	**Seat Height**	Relating to SIP/stand height	h_7	mm	1248	1255		1255		1248	1255		
	4.12	**Coupler Height**		h_{10}	mm	391			391					
	4.19	**Overall Length**		l_1	mm	4165	4215	4480	4525	4550	4165	4215	4480	4525
	4.20	**Head Length**	Length to fork face	l_2	mm	3115	3165	3280	3325	3350	3115	3165	3280	3325
	4.21	**Overall Width**		b_1	mm	1370	1455		1455		1370	1455		
	4.22	**Fork Dimension**	DIN ISO 2331	s/e/l	mm	50x150x1050		50x150x1200	60x150x1200		50x150x1050			60x150x1200
	4.23	**Fork Carriage**	ISO 2328, Class/Type A, B		class	III		IV	IV		III		IV	
	4.24	**Fork Carriage Width**		b_3	mm	1250		1330	1330		1250		1330	
	4.31	**Ground Clearance**	With load, below mast	m_1	mm	150	160		160		150	160		
	4.32		With load, centre wheelbase	m_2	mm	205			205					
	4.34.1	**Aisle Width**	For pallets 1000x1200 crossways	A_{st}	mm	4542	4592	4637	4695	4745	4542	4592	4637	4695
	4.34.2		For pallets 800x1200 lengthways	A_{st}	mm	4742	4792	4837	4895	4945	4742	4792	4837	4895
	4.35	**Turning Radius**		W_a	mm	2782	2832	2877	2925	2975	2782	2832	2877	2925
	4.36	**Internal Turning Radius**		b_{13}	mm	1007		1070	1070		1007		1070	
Performance Data	5.1	**Travel Speed**	With load / without load		km/h	20 / 21	19.5 / 20.5		19.5 / 20.5		20 / 21	19.5 / 20.5		
	5.2	**Lift Speed**	Wth load / without load		m/s	0.50/0.54			0.49/0.54	0.47/0.54	0.50/0.54			0.49/0.54
	5.3	**Lowering Speed**	With load / without load		m/s	0.48/0.45			0.49/0.45		0.48/0.45			0.49/0.45
	5.5	**Drawbar Pull**	With load (5 min. rating)		N	29890	29380	29390	29220	29010	29890	29380	29390	29220
	5.6	**Max. Drawbar Pull**	With load (5 min. rating)		N	34740	34140	34320	34060	33860	34740	34140	34320	34060
	5.7	**Gradeability**	With load / without load (5 min. rating)		%	34.7/60.0	30.8/54.1	28.2/50.1	25.5/45.5	23.6/42.9	34.7/60.0	30.8/54.1	28.2/50.1	25.5/45.5
	5.8	**Max. Gradeability**	With load / without load (5 min. rating)		%	41.3/73.4	36.4/65.4	33.1/60.1	30.1/54.2	27.8/50.9	41.3/73.4	36.4/65.4	33.3/60.1	30.1/54.2
	5.10	**Service Brake**	Service brake			Foot / Hydraulic			Foot / Hydraulic					
			Parking brake			Hand / Mechanical			Hand / Mechanical					
Combustion Engine	7.1	**Engine Manufacturer / Type**				Kubota / WG3800			Kubota / WG3800					
	7.2	**Engine Power according to ISO 1585**			kW	69			69		70			69
	7.3	**Rated Speed**			min-1	2500			2500					
	7.3.1	**Torque at 1/min**			Nm	290			290					
	7.4	**Number of Cylinders / Displacement**			-/cm^3	4 / 3769			4 / 3769					
	7.5	**Fuel Consumption as per EN 16796 (LPG)**			kg/h	5.8	6.1	6.4	6.7	7.0	5.8	6.1	6.4	6.7
	7.5.6	**CO2 equivalent as per EN 16796 (LPG)**			kg/h	19.7	20.7	21.7	22.7	23.7	19.7	20.7	21.7	22.7
	7.10	**Battery Voltage/Nominal Capacity**			V/Ah	12 / 75			12 / 75					
Add. Data	10.1	**Available Working Pressure for Attachments**			bar	140			140					
	10.2	**Oil Flow for Attachments**			l/min	80			80					
	10.7	**Sound Pressure Level at the Operator's Seat**			dB(A)	84.5			84.5					

Note: Values listed in the specification sheet have been rounded. Performance may vary due to operation conditions and / or forklift configurations.
Products and specifications are subject to change without prior notice.

Mast Chart C-G 35 S-7 / C-G 40 SC-7

Mast Type	Max. Fork Height h_3	Mast Collapsed Height h_1	Mast Extended Height h_4		Mast Free-lift Height h_2		Rated Load Capacities							
							Tilt Angle				Load Capacities			
							Single Pneumatic		Double Pneumatic		Single Pneumatic		Double Pneumatic	
			With Load Backrest	Without Load Backrest	With Load Backrest	Without Load Backrest	FWD	BWD	FWD	BWD	LC 500 mm	LC 600 mm	LC 500 mm	LC 600 mm
	mm	mm	mm	mm	mm	mm	deg	deg	deg	deg	kg	kg	kg	kg
TL	3000	2225	4265	3920	160	160	8	10	8	10	4000	3655	4000	3655
	3300	2375	4565	4220	160	160	8	10	8	10	4000	3655	4000	3655
	3650	2550	4915	4570	160	160	8	10	8	10	4000	3655	4000	3655
	4000	2875	5265	4920	160	160	8	10	8	10	4000	3655	4000	3655
	4250	3000	5515	5170	160	160	8	10	8	10	4000	3655	4000	3655
	4850	3450	6115	5770	160	160	8	8	8	10	3850	3520	3875	3545
TF	3000	2205	4250	3815	1005	1440	8	10	8	10	4000	3660	4000	3660
TT	4000	2090	5265	4810	890	1340	8	8	8	8	3975	3645	4000	3670
	4250	2175	5530	5075	975	1430	8	8	8	8	3900	3575	3950	3625
	4700	2325	5980	5525	1125	1580	8	8	8	8	3775	3465	3800	3485
	5150	2475	6430	5975	1275	1730	8	5	8	8	3650	3350	3675	3370
	5600	2625	6880	6425	1425	1880	8	3	8	8	3525	3235	3550	3255
	6050	2775	7330	6875	1575	2030	8	3	8	5	3075	2820	3450	3165

Mast Chart C-G 40 S-7 / C-G 45 SC-7

Mast Type	Max. Fork Height h_3	Mast Collapsed Height h_1	Mast Extended Height h_4		Mast Free-lift Height h_2		Rated Load Capacities							
							Tilt Angle				Load Capacities			
							Single Pneumatic		Double Pneumatic		Single Pneumatic		Double Pneumatic	
			With Load Backrest	Without Load Backrest	With Load Backrest	Without Load Backrest	FWD	BWD	FWD	BWD	LC 500 mm	LC 600 mm	LC 500 mm	LC 600 mm
	mm	mm	mm	mm	mm	mm	deg	deg	deg	deg	kg	kg	kg	kg
TL	3000	2230	4270	3920	160	160	8	10	8	10	4500	4115	4500	4115
	3300	2380	4570	4220	160	160	8	10	8	10	4500	4115	4500	4115
	3650	2555	4920	4570	160	160	8	10	8	10	4500	4115	4500	4115
	4000	2880	5270	4920	160	160	8	10	8	10	4500	4115	4500	4115
	4250	3005	5520	5170	160	160	8	10	8	10	4500	4115	4500	4115
	4850	3455	6120	5770	160	160	8	8	8	10	4400	4025	4250	4045
TF	3000	2210	4255	3820	1010	1445	8	10	8	10	4500	4115	4500	4115
TT	4000	2090	5270	4815	890	1345	8	8	8	8	4500	4125	4500	4125
	4250	2180	5535	5080	980	1435	8	8	8	8	4475	4105	4500	4125
	4700	2330	5985	5530	1130	1585	8	8	8	8	4325	3965	4350	3900
	5150	2480	6435	5980	1280	1735	8	5	8	8	4175	3830	4225	3875
	5600	2630	6885	6430	1430	1885	8	3	8	5	4050	3715	4075	3740
	6050	2780	7335	6880	1580	2035	8	3	8	3	3800	3485	3950	3625

Mast Chart C-G 45 S-7 / C-G 50 SC-7

Mast Type	Max. Fork Height h_3	Mast Collapsed Height h_1	Mast Extended Height h_4		Mast Free-lift Height h_2		Rated Load Capacities							
							Tilt Angle				Load Capacities			
							Single Pneumatic		Double Pneumatic		Single Pneumatic		Double Pneumatic	
			With Load Backrest	Without Load Backrest	With Load Backrest	Without Load Backrest	FWD	BWD	FWD	BWD	LC 500 mm	LC 600 mm	LC 500 mm	LC 600 mm
	mm	mm	mm	mm	mm	mm	deg	deg	deg	deg	kg	kg	kg	kg
TL	3000	2230	4420	3950	160	160	8	10	8	10	5000	4570	5000	4570
	3300	2380	4720	4250	160	160	8	10	8	10	5000	4570	5000	4570
	3650	2555	5070	4600	160	160	8	10	8	10	5000	4570	5000	4570
	4000	2880	5420	4950	160	160	8	10	8	10	5000	4570	5000	4570
	4250	3005	5670	5200	160	160	8	10	8	10	5000	4570	5000	4570
	4850	3455	6270	5800	160	160	8	5	8	10	4900	4480	4950	4525
TF	3000	2210	4400	3905	860	1355	8	10	8	10	5000	4575	5000	4575
TT	4000	2090	5415	4900	740	1255	8	8	8	8	5000	4585	5000	4585
	4250	2180	5680	5165	830	1345	8	8	8	8	4975	4565	5000	4585
	4700	2330	5130	5615	980	1495	8	8	8	8	4800	4400	4850	4450
	5150	2480	6580	6065	1130	1645	8	3	8	8	4650	4265	4700	4310
	5600	2630	7030	6515	1280	1795	8	3	8	5	4500	4125	4550	4175
	6050	2780	7480	6965	1430	1945	8	3	8	3	3575	3280	4025	3690

Note: Mast specifications and rated capacities are based on standard chassis equipped with Pneumatic tyre without sideshifter.

Mast Chart C-G 50 C-7 / C-G 55 SC-7

Mast Type	Max. Fork Height h_3	Mast Collapsed Height h_1	Mast Extended Height h_4		Mast Free-lift Height h_2		Rated Load Capacities							
							Tilt Angle				Load Capacities			
							Single Pneumatic		Double Pneumatic		Single Pneumatic		Double Pneumatic	
			With Load Backrest	Without Load Backrest	With Load Backrest	Without Load Backrest	FWD	BWD	FWD	BWD	LC 500 mm	LC 600 mm	LC 500 mm	LC 600 mm
	mm	mm	mm	mm	mm	mm	deg	deg	deg	deg	kg	kg	kg	kg
TL	2750	2230	4170	3825	170	170	8	10	8	10	5500	5030	5500	5030
	3050	2380	4470	4125	170	170	8	10	8	10	5500	5030	5500	5030
	3400	2555	4820	4475	170	170	8	10	8	10	5500	5030	5500	5030
	3750	2880	5170	4825	170	170	8	10	8	10	5500	5030	5500	5030
	4000	3005	5420	5075	170	170	8	10	8	10	5500	5030	5500	5030
	4600	3445	6020	5675	170	170	8	8	8	10	5500	5030	5500	5030
TF	2875	2210	4275	3905	870	1240	8	10	8	10	5500	5035	5500	5035
TT	3875	2090	5290	4900	750	1140	8	8	8	8	5500	5050	5500	5050
	4125	2180	5555	5165	840	1230	8	8	8	8	5500	5050	5500	5050
	4575	2330	6005	5615	990	1380	8	8	8	8	5375	4935	5425	4980
	5025	2480	6455	6065	1140	1530	8	5	8	8	5200	4775	5150	4725
	5475	2630	6905	6515	1290	1680	8	3	8	5	4650	4270	4750	4360
	5925	2780	7355	6965	1440	1830	8	3	8	5	3625	3330	3525	3235

Mast Chart C-G 55 C-7

Mast Type	Max. Fork Height h_3	Mast Collapsed Height h_1	Mast Extended Height h_4		Mast Free-lift Height h_2		Rated Load Capacities					
							Tilt Angle				Load Capacities	
							Single Pneumatic		Double Pneumatic		Single Pneumatic	Double Pneumatic
			With Load Backrest	Without Load Backrest	With Load Backrest	Without Load Backrest	FWD	BWD	FWD	BWD	LC 600 mm	LC 600 mm
	mm	mm	mm	mm	mm	mm	deg	deg	deg	deg	kg	kg
TL	2750	2230	4170	3825	170	170	8	10	8	10	5500	5500
	3050	2380	4470	4125	170	170	8	10	8	10	5500	5500
	3400	2555	4820	4475	170	170	8	10	8	10	5500	5500
	3750	2880	5170	4825	170	170	8	10	8	10	5500	5500
	4000	3005	5420	5075	170	170	8	10	8	10	5500	5500
	4600	3445	6020	5675	170	170	8	8	8	5	5400	4900
TF	2875	2210	4275	3905	870	1240	8	10	8	10	5500	5500
TT	3875	2090	5290	4900	750	1140	8	8	8	8	5500	5500
	4125	2180	5555	5165	840	1230	8	8	8	8	5500	5500
	4575	2330	6005	5615	990	1380	8	8	8	8	5500	5500
	5025	2480	6455	6065	1140	1530	8	5	8	8	5150	4925
	5475	2630	6905	6515	1290	1680	8	3	8	5	4500	4575
	5925	2780	7355	6965	1440	1830	8	3	8	5	3500	3375

Note: Mast specifications and rated capacities are based on standard chassis equipped with Pneumatic tyre without sideshifter.

Standard Features

1. Euro stage V Engine
2. Directional lever
3. Mast interlock - tilt, lift and lower
4. 3-way valve, 3 levers
5. Waterproof connectors
6. Dual element air cleaner
7. Full floating driveaxle with oil-cooled disc brakes
8. Easy to service
   - Integrated electric components in the junction box (relays and fuses)
   - Toolless access to the side floor mat and plate
   - Wide hood open range
9. Operator design features
   - Clear-view overhead guard and mast design
   - Wide, spacious floorboard
   - Removable floor mat and plate
   - Operator Presence Sensor
   - Parking brake alarm
   - Entry grab bar
   - LCD screen
   - Seat belt indicator
   - Adjustable steer column
   - Small steering wheel
   - USB port
   - 12 V electrical outlet

Optional Equipment

1. Operator design features
   - Auto tilt leveling
   - Fingertip controls 3 Way, 3 Levers or 4 Way, 4 Levers
   - Mirrors
   - Premium suspension seat with: Armrest, seat heater and lumbar support
   - Modular cabin versions
   - Air conditioner for hard cabin
   - Heater for hard cabin
   - Radio with MP3 player
2. Lights
   - LED Front worklights with turn signals
   - LED Rear lights with back-up and turn signals
   - LED Rear worklights
3. Audible warning devices
   - Back-up travel alarm
4. Visual warning devices
   - Flashing light
   - Floor spotlight (blue light)
5. Attachments
   - Hang-on sideshifter
   - Fork positioner with integrated sideshifter
6. Rear-view camera for hard cabin
7. Radio with MP3 player
8. Heavy-duty operation
   - Pre-cleaner
   - Heavy-duty cooling system
9. InfoLink® Ready

Warning Device Notes

Audible or visual alerts

Safety considerations and dangers associated with audible travel alarms and lights include:

- Multiple alarms and/or lights can cause confusion.
- Workers ignore the alarms and/or lights after day-in and day-out exposure.
- Operator may transfer the responsibility for “looking out” to the pedestrians.
- Annoys operators and pedestrians.

Other Options Available

Contact Crown for additional options.

Dimensions and performance data given may vary due to manufacturing tolerances. Performance is based on an average size vehicle and is affected by weight, truck condition, truck equipment and the conditions of the operating area. Crown products and specifications are subject to change without notice.

C-G 30-55 SPEC GB 06/24, 10
M03555-006-01
Printed in Germany

ISO 9001 Quality Management System certified for the design, development, manufacture, sale and product support of industrial trucks.

European Manufacturing:
Crown Gabelstapler GmbH & Co. KG

Продавец:
kupit-shtabeler.ru
+7 495 159-44-32
zakaz@kupit-shtabeler.ru