WT 3000 SERIES

Specifications

Rider pallet truck

WT 3020-2.0 folding platform
mechanical steering

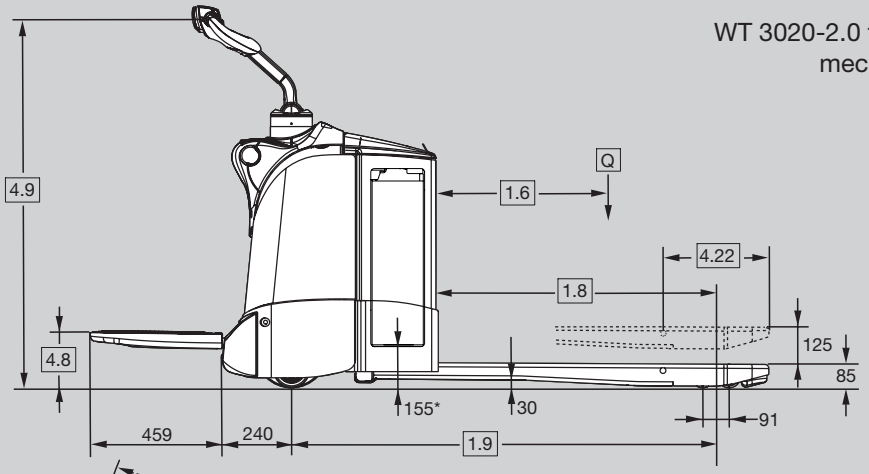

* battery rollout height, lift lowered

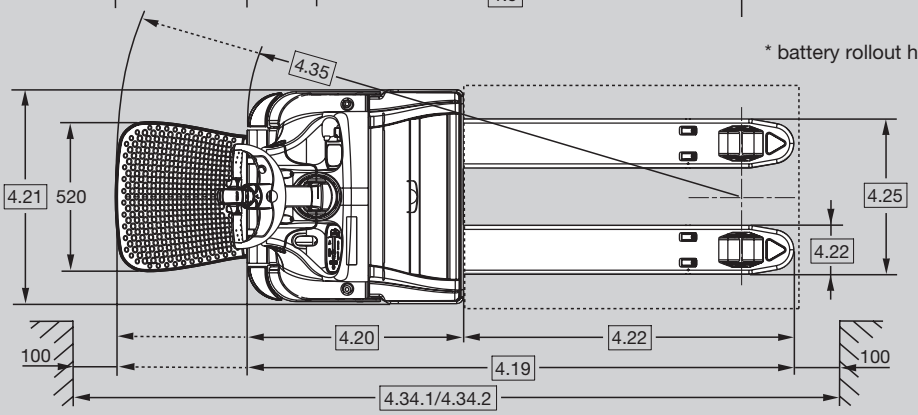

WT 3040-2.0 folding platform
electric or mechanical steering

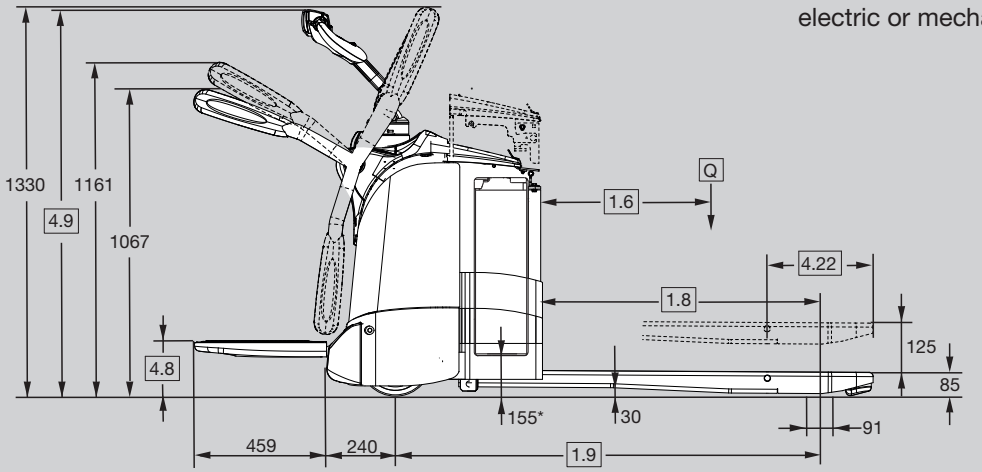

* battery rollout height, lift lowered

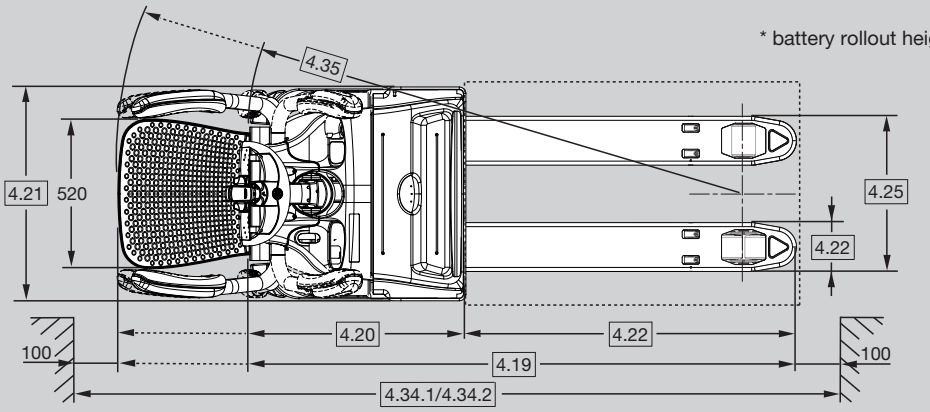

WT 3040-2.0 rear entry fixed platform
electric or mechanical steering

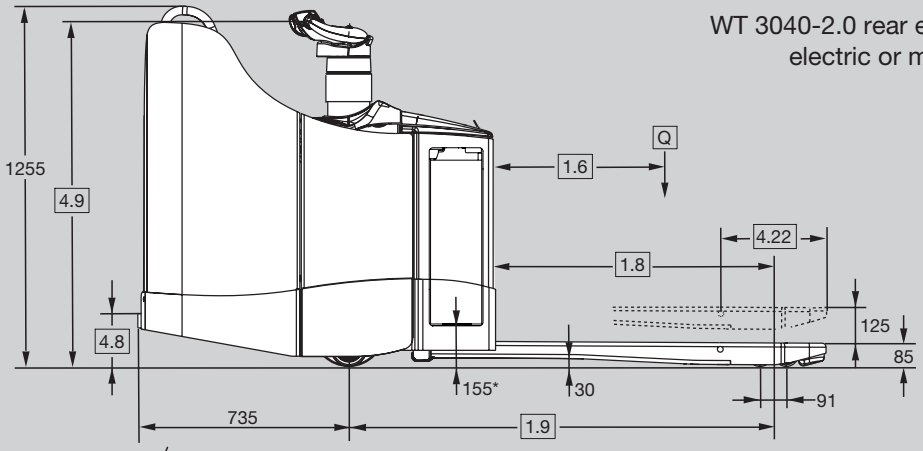

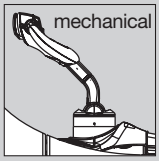

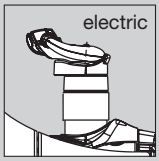

* battery rollout height, lift lowered

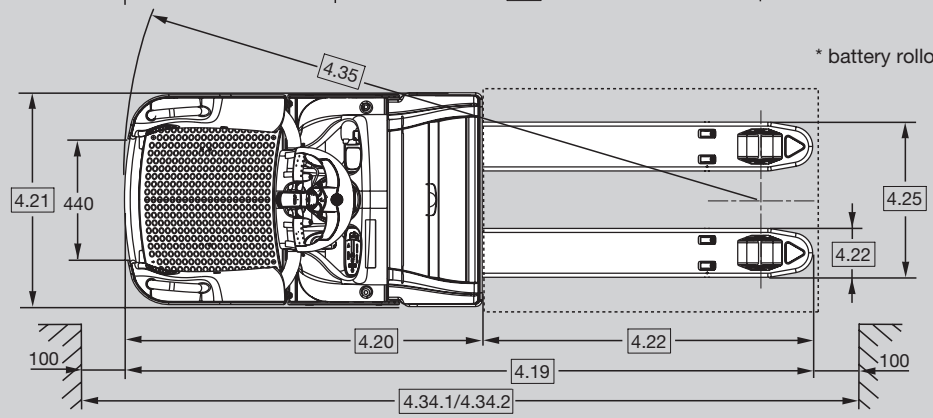

WT 3040-2.0 side entry fixed platform
electric steering

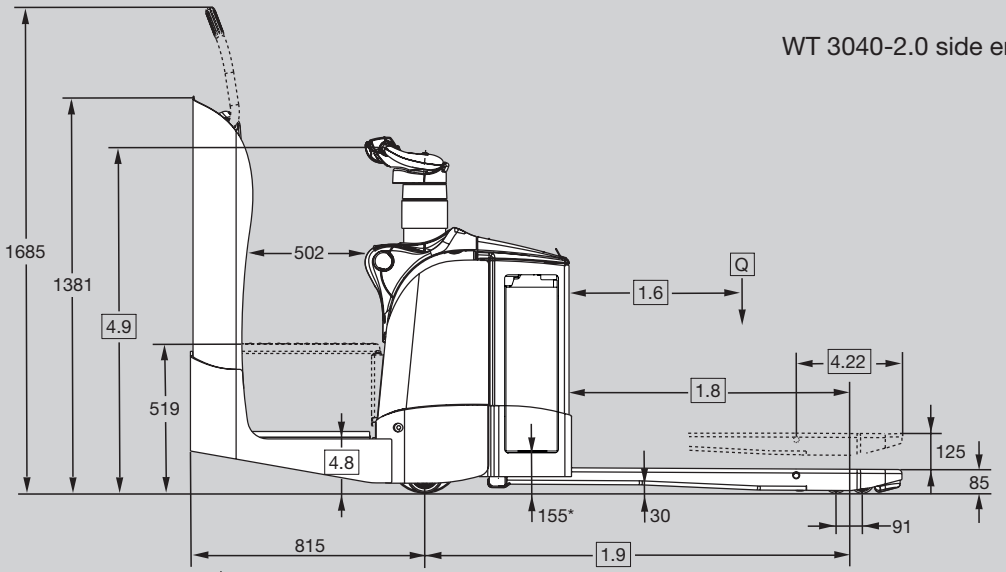

* battery rollout height, lift lowered

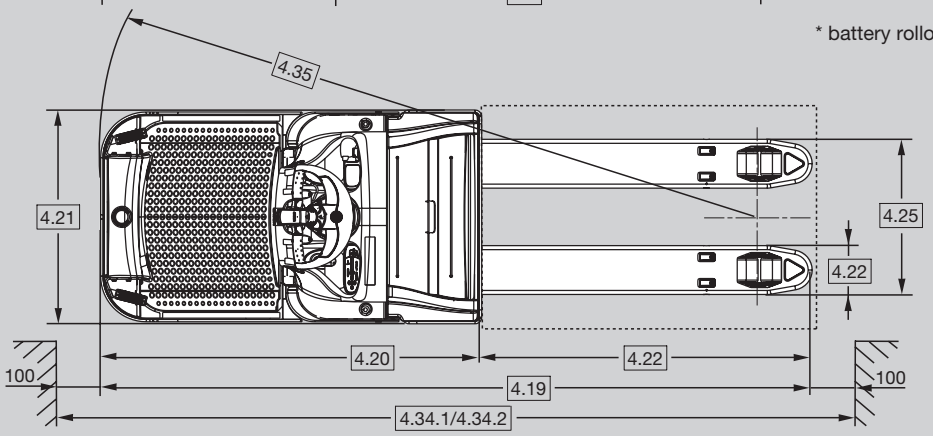

Distinguishing mark	1.1	**Manufacturer**				Crown Equipment Corporation					
	1.2	**Model**				WT 3020-2.0	WT 3040-2.0				
			steering type			mechanical			electric		
			platform type			folding	folding	rear entry	folding	rear entry	side entry
	1.3	**Power source**				electric					
	1.4	**Operator type**				standing					
	1.5	**Rated capacity**		Q	t	2.0					
	1.6	**Load centre**		c	mm	see table 1	see table 2				
	1.8	**Load distance**	raised	x	mm	see table 1	see table 2				
	1.9	**Wheelbase**	raised	y	mm	see table 1	see table 2				
	2.1	**Service weight**	less battery		kg	see table 1	see table 2				
	2.2	**Axle load**	with load, front/rear		kg	see table 1	see table 2				
	2.3	**Axle load**	without load, front/rear		kg	see table 1	see table 2				
Tyres/Wheels/Chassis	3.1	**Tyres**				Vulkollan					
	3.2	**Tyre size**	front		mm	Ø 230 x 70	Ø 230 x 70		Ø 250 x 75		
	3.3	**Tyre size**	rear		mm	Ø 82 x 110					
	3.4	**Additional wheels**	castor wheel *****		mm	Ø 125 x 50					
	3.5	**Wheels**	number front/rear (x=driven wheels)			1x + 2/2					
	3.6	**Tread**	front	b_{10}	mm	512					
	3.7	**Tread**	rear	b_{11}	mm	350/370/390/500					
Dimensions	4.4	**Lift height**		h_3	mm	125					
	4.8	**Seat height relating to SIP/stand height**		h_7	mm	186	186	197	186	197	197
	4.9	**Height control handle**	in driving position min./max.	h_{14}	mm	1,056/1,359	1,056/1,359	1,054/1,323	1,056/1,359	1,249	1,249
	4.15	**Fork height**	lowered	h_{13}	mm	85					
	4.19	**Overall length**	raised	l_1	mm	see table 1	see table 2				
	4.20	**Head length**	raised	l_2	mm	see table 1	see table 2				
	4.21	**Overall width**		b_1	mm	740					
	4.22	**Fork dimensions**	DIN ISO 2331	s/e/l	mm	78 x 170 x 1,150					
	4.25	**Fork spread**		b_5	mm	see table 1	see table 2				
	4.32	**Ground clearance**	centre wheelbase	m_2	mm	30					
	4.34.1	**Aisle width *** for pallets 1,000×1,200 crossways, raised		A_{st}	mm	1,927/2,353 (2,003/2,429)	2,003/2,429	–	2,003/2,429	–	–
	4.34.2	**Aisle width **** for pallets 800×1,200 lengthways, raised		A_{st}	mm	2,127/2,553 (2,203/2,629)	2,203/2,629	2,635	2,203/2,629	2,635	2,754
	4.35	**Turning radius**	raised	Wa	mm	see table 1	see table 2				
Performance data	5.1	**Travel speed**	with/without load, power unit first		km/h	6.0/6.0 ◆	7.5/10.5		10.0/12.5		
	5.1.1	**Travel speed backwards**	with/without load, forks first		km/h	6.0/6.0 ◆	7.5/10.5		10.0/12.5		
	5.2	**Lift speed**	with/without load		m/s	0.04/0.06					
	5.3	**Lowering speed**	with/without load		m/s	0.05/0.05					
	5.8	**Max. gradability**	with/without load, 5 min. rating		%	10/20			9/20		
	5.10	**Service brake**				electric					
Electric motor	6.1	**Traction motor**	rating at S2 60 min./H-class		kW	3.0	4.0				
	6.2	**Pump motor *****	rating at S3 15%		kW	1.3 (2.2)	1.3 (2.2)				
	6.3	**Battery**	according to DIN 43531/35/36 A, B, C, no			B					
		Max. battery box size****		lxwxh	mm	212x624x627 (284x624x627)	284 x 624 x 627 (288 x 628 x 784)				
	6.4	**Battery voltage ********	nominal capacity 5h rating		V/Ah	24/230–250 (315–375)	24/315–375 (420–465)				
	6.5	**Battery weight ********	min./max.		kg	201/223 (270/324)	270/324 (382/439)				
	8.1	**Type of controller**	drive			AC-transistor					
	10.7	**Sound pressure level**	at the operator's seat		dB(A)	≤70					

* Aisle width calculation based on standard truck configuration with 1,000 mm fork length and 368 mm fork tip length, platform up/down

** Aisle width calculation based on standard truck configuration with 1,150 mm fork length and 368 mm fork tip length, platform up/down or fixed platform

*** With fork lengths ≥1,600 mm, use values in brackets

**** With optional larger battery compartment, use values in brackets

***** WT 3020 castor wheels are fixed type

◆ 7.5/8.5 km/h with optional side restraints

Table 1					WT 3020-2.0 folding platform, 250 Ah compartment		
1.6	Load centre		c	mm	500	600	600
1.8	Load distance [1]		x	mm	740	890	940
1.9	Wheelbase [2 4]		y	mm	1,193	1,343	1,393
2.1	Service weight [5]	less battery		kg	551	556	558
2.2	Axle load [6]	with load	front	kg	1,024	1,121	1,128
			rear	kg	1,751	1,658	1,653
2.3	Axle load [6]	without load	front	kg	623	637	641
			rear	kg	151	142	140
4.19	Overall length [3 4]	platform up	l_1	mm	1,693	1,843	1,893
		platform down	l_1	mm	2,152	2,302	2,352
4.20	Head length [3 4]	platform up	l_2	mm	693		
		platform down	l_2	mm	1,152		
4.22	Fork dimensions DIN ISO 2331		s x e	mm	78 x 170		
	Fork length		l	mm	1,000	1,150	1,200
	Fork tip length			mm	368		
4.25	Fork spread		b_5	mm	520/540/560/670		
4.35	Turning radius [2 4]	platform up	Wa	mm	1,467	1,617	1,667
		platform down	Wa	mm	1,893	2,043	2,093

Table 2					WT 3020-2.0/WT 3040-2.0 folding platform, 375 Ah compartment								
1.6	Load centre		c	mm	500	600	600	700	800	900	1,000	1,100	1,200
1.8	Load distance [1]		x	mm	740	890	940	1,140	1,340	1,540	1,740	1,890	2,140
1.9	Wheelbase [2 4]		y	mm	1,269	1,419	1,469	1,669	1,869	2,069	2,269	2,419	2,669
2.1	Service weight [5]	less battery		kg	576	581	583	589	619	631	643	655	671
2.2	Axle load [6]	with load	front	kg	1,091	1,139	1,198	1,280	1,358	1,414	1,461	1,472	1,538
			rear	kg	1,809	1,767	1,709	1,633	1,585	1,542	1,507	1,507	1,457
2.3	Axle load [6]	without load	front	kg	715	732	737	754	781	796	809	820	834
			rear	kg	186	174	171	159	162	159	158	160	161
4.19	Overall length [3 4]	platform up	l_1	mm	1,769	1,919	1,969	2,169	2,369	2,569	2,769	2,919	3,169
		platform down	l_1	mm	2,228	2,378	2,428	2,628	2,828	3,028	3,228	3,378	3,628
4.20	Head length [3 4]	platform up	l_2	mm	769								
		platform down	l_2	mm	1,120								
4.22	Fork dimensions DIN ISO 2331		s x e	mm	78 x 170								
	Fork length		l	mm	1,000	1,150	1,200	1,400	1,600	1,800	2,000	2,150	2,400
	Fork tip length			mm	368								
4.25	Fork spread		b_5	mm	520/540/560/670								
4.35	Turning radius [2 4]	platform up	Wa	mm	1,543	1,693	1,743	1,943	2,143	2,343	2,543	2,693	2,943
		platform down	Wa	mm	1,969	2,119	2,169	2,369	2,569	2,769	2,969	3,119	3,369

Table 2					WT 3040-2.0 375 Ah compartment															
					rear entry platform								side entry platform							
1.6	Load centre		c	mm	600	600	700	800	900	1,000	1,100	1,200	600	600	700	800	900	1,000	1,100	1,200
1.8	Load distance [1]		x	mm	890	940	1,140	1,340	1,540	1,740	1,890	2,140	890	940	1,140	1,340	1,540	1,740	1,890	2,140
1.9	Wheelbase [2 4]		y	mm	1,419	1,469	1,669	1,869	2,069	2,269	2,419	2,669	1,419	1,469	1,669	1,869	2,069	2,269	2,419	2,669
2.1	Service weight	less battery		kg	637	639	645	675	687	699	711	727	873	875	881	911	923	935	947	963
2.2	Axle load	with load	front	kg	1,215	1,274	1,353	1,430	1,484	1,529	1,540	1,605	1,468	1,526	1,603	1,679	1,731	1,776	1,786	1,850
			rear	kg	1,746	1,690	1,616	1,570	1,528	1,494	1,495	1,447	1,730	1,673	1,602	1,557	1,516	1,483	1,485	1,437
2.3	Axle load	without load	front	kg	808	812	827	853	866	878	888	901	1,060	1,064	1,077	1,102	1,114	1,125	1,134	1,147
			rear	kg	154	151	142	147	145	145	148	150	137	135	128	134	133	134	137	141
4.19	Overall length [3 4]		l_1	mm	2,413	2,463	2,663	2,863	3,063	3,263	3,413	3,663	2,494	2,544	2,744	2,944	3,144	3,344	3,494	3,744
4.20	Head length [3 4]		l_2	mm	1,263								1,344							
4.22	Fork dimensions DIN ISO 2331		s x e	mm	78 x 170															
	Fork length		l	mm	1,150	1,200	1,400	1,600	1,800	2,000	2,150	2,400	1,150	1,200	1,400	1,600	1,800	2,000	2,150	2,400
	Fork tip length			mm	368															
4.25	Fork spread		b_5	mm	520/540/560/670															
4.35	Turning radius [2 4]		Wa	mm	2,152	2,202	2,402	2,602	2,802	3,002	3,152	3,402	2,244	2,294	2,494	2,694	2,894	3,094	3,244	3,494

Table 3					WT 3060-2.5 375 Ah compartment															
					folding platform									rear entry platform						
1.6	Load centre		c	mm	500	600	600	700	800	1,000	1,200	1,200	1,200	600	600	700	800	1,000	1,200	1,200	1,200
1.8	Load distance [1]		x	mm	748	898	948	1,148	1,348	1,748	1,815	1,778	1,564	898	948	1,148	1,348	1,748	1,815	1,778	1,564
1.9	Wheelbase [2 4]		y	mm	1,277	1,427	1,477	1,677	1,877	2,277	2,344	2,307	2,093	1,427	1,477	1,677	1,877	2,277	2,344	2,307	2,093
2.1	Service weight	less battery		kg	656	668	671	687	701	730	752	751	745	724	727	743	757	786	808	807	801
2.2	Axle load	with load	front	kg	1,302	1,355	1,426	1,522	1,600	1,717	1,553	1,520	1,312	1,432	1,503	1,597	1,672	1,787	1,622	1,590	1,383
			rear	kg	2,179	2,138	2,069	1,989	1,925	1,837	2,024	2,055	2,257	2,116	2,049	1,971	1,909	1,824	2,011	2,042	2,242
2.3	Axle load	without load	front	kg	783	803	808	829	847	877	879	876	857	880	885	904	920	947	948	945	928
			rear	kg	197	190	187	182	178	177	198	200	212	168	166	164	162	164	185	187	197
4.19	Overall length [3 4]	platform up	l_1	mm	1,769	1,919	1,969	2,169	2,369	2,769	3,169	3,169	3,169	2,413	2,463	2,663	2,863	3,263	3,663	3,663	3,663
		platform down	l_1	mm	2,228	2,378	2,428	2,628	2,828	3,228	3,628	3,628	3,628								
4.20	Head length [3 4]	platform up	l_2	mm	769									1,263							
		platform down	l_2	mm	1,228																
4.22	Fork dimensions DIN ISO 2331		s x e	mm	78 x 180																
	Fork length		l	mm	1,000	1,150	1,200	1,400	1,600	2,000	2,400	2,400	2,400	1,150	1,200	1,400	1,600	2,000	2,400	2,400	2,400
	Fork tip length			mm	360	360	360	360	360	360	693*	730**	944**	360	360	360	360	360	693*	730**	944**
4.25	Fork spread		b_5	mm	520/540/680																
4.35	Turning radius [2 4]	platform up	Wa	mm	1,551	1,701	1,751	1,951	2,151	2,551	2,618	2,581	2,367	2,160	2,210	2,410	2,610	3,010	3,077	3,040	2,826
		platform down	Wa	mm	1,977	2,127	2,177	2,377	2,577	2,977	3,044	3,007	2,793								

[1] Forks lowered +40 mm
[2] Forks lowered +58 mm
[3] Forks lowered -18 mm
[4] With optional battery rollout +67 mm
[5] WT 3020 with 375 Ah compartment -23 kg
[6] WT 3020 with 375 Ah compartment -23 kg at front
* Only with single load wheels
** Only with tandem load wheels

WT 3060-2.5 folding platform
electric steering

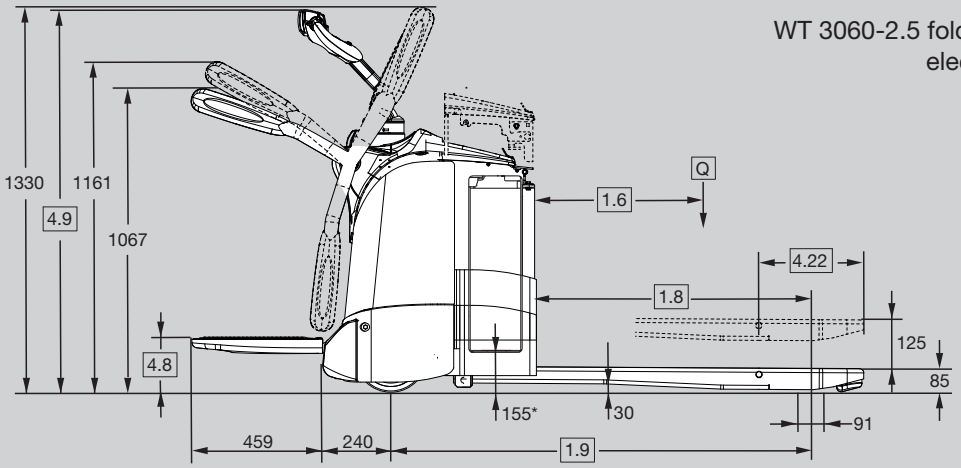

* battery rollout height, lift lowered

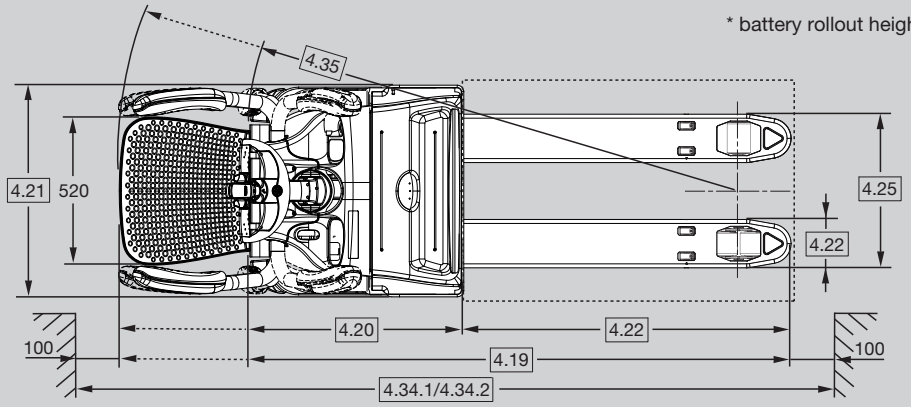

WT 3060-2.5 rear entry fixed platform
electric steering

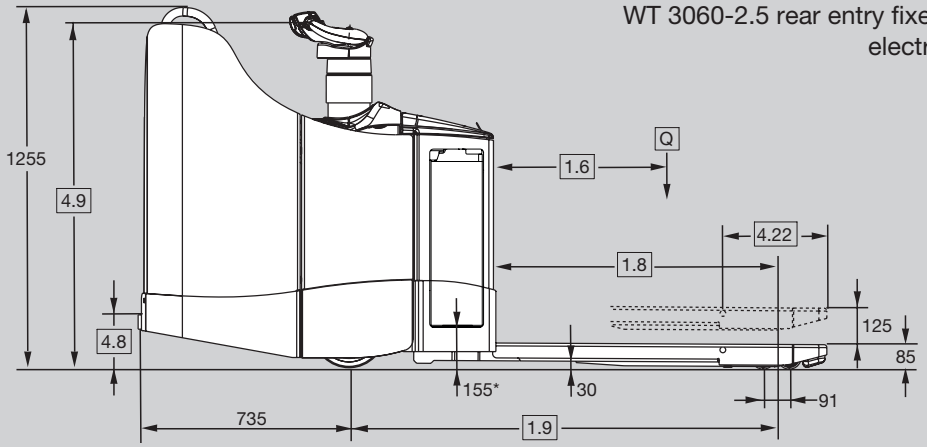

* battery rollout height, lift lowered

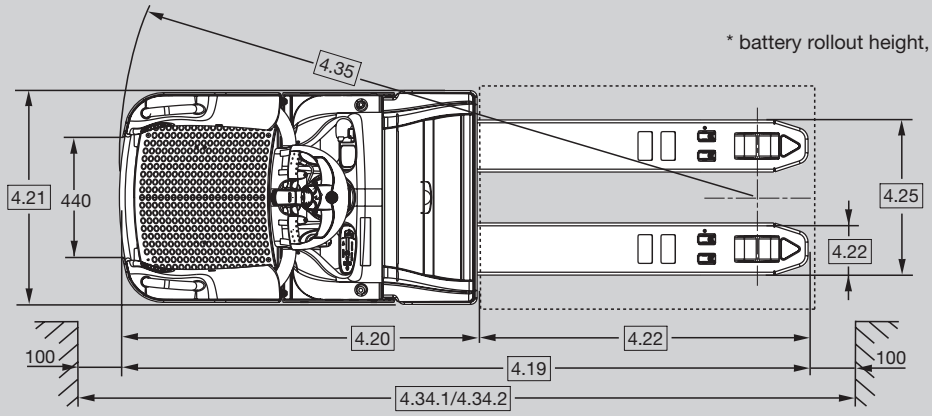

Distinguishing mark	1.1	**Manufacturer**				Crown Equipment Corporation	
	1.2	**Model**				WT 3060-2.5	
			steering type			electric	
			platform type			folding	rear entry
	1.3	**Power source**				electric	
	1.4	**Operator type**				standing	
	1.5	**Rated capacity**		Q	t	2.5	
	1.6	**Load centre**		c	mm	see table 3	
	1.8	**Load distance**	raised	x	mm	see table 3	
	1.9	**Wheelbase**	raised	y	mm	see table 3	
	2.1	**Service weight**	less battery		kg	see table 3	
	2.2	**Axle load**	with load, front/rear		kg	see table 3	
	2.3	**Axle load**	without load, front/rear		kg	see table 3	
Tyres/Wheels/Chassis	3.1	**Tyres**				Vulkollan	
	3.2	**Tyre size**	front		mm	Ø 250 x 75	
	3.3	**Tyre size**	rear		mm	Ø 82 x 110	
	3.4	**Additional wheels**	castor wheel		mm	Ø 125 x 50	
	3.5	**Wheels**	number front/rear (x=driven wheels)			1x + 2/2	
	3.6	**Track width**	front	b_{10}	mm	512	
	3.7	**Track width**	rear	b_{11}	mm	350/370/500	
Dimensions	4.4	**Lift height**		h_3	mm	125	
	4.8	**Seat height relating to SIP/stand height**		h_7	mm	186	197
	4.9	**Height control handle**	in driving position min./max.	h_{14}	mm	1,056/1,359	1,249
	4.15	**Fork height**	lowered	h_{13}	mm	85	
	4.19	**Overall length**	raised	l_1	mm	see table 3	
	4.20	**Head length**	raised	l_2	mm	see table 3	
	4.21	**Overall width**		b_1	mm	740	
	4.22	**Fork dimensions**	DIN ISO 2331	s/e/l	mm	78 x 180 x 1,150	
	4.25	**Fork spread**		b_5	mm	see table 3	
	4.32	**Ground clearance**	centre wheelbase	m_2	mm	30	
	4.34.1	**Aisle width ***	for pallets 1,000×1,200 crossways, raised	A_{st}	mm	2,003/2,429	–
	4.34.2	**Aisle width ****	for pallets 800×1,200 lengthways, raised	A_{st}	mm	2,203/2,629	2,662
	4.35	**Turning radius**	raised	Wa	mm	see table 3	
Performance data	5.1	**Travel speed**	with/without load, power unit first		km/h	9.0/12.5	
	5.1.1	**Travel speed backwards**	with/without load, forks first		km/h	9.0/12.5	
	5.2	**Lift speed**	with/without load		m/s	0.04/0.06	
	5.3	**Lowering speed**	with/without load		m/s	0.05/0.05	
	5.8	**Max. gradability**	with/without load, 5 min. rating		%	8/20	
	5.10	**Service brake**				electric	
Electric motor	6.1	**Traction motor**	rating at S2 60 min./H-class		kW	4.0	
	6.2	**Pump motor**	rating at S3 15%		kW	2.2	
	6.3	**Battery**	according to DIN 43531/35/36 A, B, C, no			B	
		Max. battery box size ***		lxwxh	mm	284 x 624 x 627 (288 x 628 x 784)	
	6.4	**Battery voltage *****	nominal capacity 5h rating		V/Ah	24/315–375 (420–465)	
	6.5	**Battery weight *****	min./max.		kg	270/324 (382/439)	
	8.1	**Type of controller**	drive			AC-transistor	
	10.7	**Sound pressure level**	at the operator's seat		dB(A)	≤70	

* Aisle width calculation based on standard truck configuration with 1,000 mm fork length and 360 mm fork tip length, platform up/down
** Aisle width calculation based on standard truck configuration with 1,150 mm fork length and 360 mm fork tip length, platform up/down or fixed platform
*** With optional larger battery compartment, use values in brackets

Capacity

WT 3020 — 2,000 kg

WT 3040 — 2,000 kg

WT 3060 — 2,500 kg

Electric system/batteries

24-volt electrical system with nominal battery capacities from 230 Ah to 465 Ah.

The battery can be removed vertically or horizontally with optional battery compartment rollers.

Standard equipment

1. Maintenance free 3-phase Crown (AC) traction motor
2. e-GEN braking system offers regenerative and frictionless electric braking. Mechanical braking applies only as parking brake
3. The X10 control handle places all truck functions at the operator's fingertips
4. Crown Access 1 2 3 comprehensive system control
   - LCD screen
   - Keyless start-up with PIN code
   - Start-up and run-time diagnostics
   - Battery discharge indicator and lift interrupt
   - 3 selectable traction performance profiles (WT 3040, WT 3060)
   - Hour meters for monitoring various truck operating components
   - On-board diagnostics with real time trouble-shooting capabilities
5. FlexRide reduces vibrations and shocks to a minimum by combining (folding platform)
   - Soft floor mat with integrated presence sensor
   - Advanced platform suspension
   - Fully suspended drive unit
   - Heavy-duty shock absorbing castors (WT 3040, WT 3060)
6. CAN bus technology
7. Sealed electrical Deutsch connectors
8. Heavy-duty adjustable side restraints with soft side pads (WT 3040/3060)
9. Electric power disconnect switch
10. Vulkollan drive tyre, castor wheels and load wheels
11. Single load wheels
12. Ramp hold
13. Battery connector DIN 160 A Schaltbau
14. Heavy-duty reinforced fork assembly
15. Heavy-duty chassis with 10 mm thick steel skirt
16. Easily removable steel covers including hinged battery cover for convenient access
17. Intelligent electric steering system (WT 3060)
    - Selectable performance profiles for speed reduction in turns
    - Tactile feedback feature analyses operational conditions and adjusts steering force for optimised control
    - Active traction system adjusts drive tyre pressure as load weight changes
    - Maintenance free 3-phase (AC) steer motor
18. Rabbit/turtle switch incorporates two levels of programmable travel performance
19. Pallet entry ramp

Optional equipment

1. Intelligent electric steering system (WT 3040)
2. Rear entry fixed platform (WT 3040, WT 3060)
3. Side entry fixed platform (WT 3040)
4. Weight-adjustable FlexRide (for rear entry platform)
5. Folding step with backrest grab bar for extended operator reach (for side entry platform)
6. Fork length and spread options
7. Battery compartment for 315-375 Ah batteries (WT 3020) and for 420-465 Ah batteries (WT 3040, WT 3060)
8. Battery rollout (longer head length)
9. Battery connector options
10. Rubber, rubber sipped, Pevodyn Soft or supertrac drive tyre
11. Tandem load wheel (Diameter) 82 x 82 mm
12. Heavy-duty fixed castor wheels, single or dual
13. Cold storage conditioning and corrosion conditioning
14. InfoLink ready
15. 12 V clean power supply
16. 24 V power supply
17. Key switch or keypad
18. Load backrest options
19. Audible travel alarm
20. Heavy-duty adjustable side restraints with soft side pads (WT 3020)
21. Work Assist accessory tube
22. Work Assist Accessories
    - Load tray
    - Storage pockets
    - Cup holder
    - Rubbish bag holder
    - Scan-gun holder
    - Single foil holder
    - Small, medium and large clip pads
    - Mounting brackets for WMS terminals
23. Special paint
24. Fork weld marks
25. Lithium-ion battery ready
26. Heavy-duty shock absorbing castor wheels (WT 3020)
27. Strobe lights

Electrical

24 volt electrical system managed by Crown's Access 1 2 3 comprehensive system control. Virtually maintenance-free AC traction motor provides strong acceleration and control at any speed. Sensors monitor functional parameters, including steering and speed, and adjust operational settings automatically to suit conditions.

Power unit

Designed to take the abuse of dock work, the rugged power unit features a reinforced 10 mm thick skirt to protect drive unit and castor components. A 12 mm skirt protects the battery and lift linkage. The contoured skirt provides greater ground clearance for working on ramps. Removable steel covers all around ensure internal components are protected against impacts yet easily accessible for service.

Operator area and controls

The WT 3000 Series incorporates numerous design features to improve operator comfort and productivity.

The folding FlexRide platform reduces shock transfer to the operator by more than 80 percent. Dock boards can be crossed without reducing speed. The lifetime platform suspension never requires adjustment and features solid state induction switches to avoid reliability issues caused by contaminants.

Heavy-duty adjustable side restraints feature 50 mm heavy-wall steel tubing and rugged C-clamp mounting system. Soft polyurethane side pads are positioned for excellent support and comfort. The robust adjustable side restraints can be easily folded up and down for convenient entry and exit. We're so confident in their strength and durability that they are guaranteed for the life of the vehicle for the original owner.

Fixed platform models feature a patented Entry Bar safety switch which alerts operators if their foot is outside the protection of the operator compartment. If the operator steps on the Entry Bar, the truck will roll to a stop in 10 metres or less depending on travel speed, sound an alarm and show 'ENTRY BAR' on the truck display.

Low step height and wide, rounded access make it easy to step on and off the truck. The rear-entry platform incorporates large side cushions for soft support in side-stance position.

A contoured lean pad on the side entry platform provides a soft contact surface to lean against.

The weight-adjustable FlexRide platform — optional on the rear entry model — provides exceptional rider comfort by tuning the suspension to the operator's body weight.

The X10 control handle, designed for simultaneous operation of all functions with one hand, improves side-stance operation for maximum visibility in both directions of travel. An ergonomic forward/reverse rocker allows for precise manoeuvring. The handgrips are urethane-covered for insulation from cold and vibration with integrated horn buttons for easy activation.
A rabbit/turtle switch incorporates two levels of programmable travel performance so operators can select the setting that matches their experience level or application requirements.
The low-mounted tiller provides best-in-class foot clearance when operating in pedestrian mode (platform folded up).

Available electric steering improves manoeuvrability and responsiveness, even with heavy loads. An intelligent tactile feedback feature analyses operational conditions and adjusts steering force for greater driver confidence. Combined with active traction and speed reduction in turns, electric steering safely delivers top driving performance.

Access 1 2 3 comprehensive system control

Crown's Access 1 2 3 technology provides optimum performance and control by offering a communications interface for the operator and service technician, intelligent coordination of lift truck systems and simplified service with advanced diagnostics.

The display includes a full featured on-board service tool so service personnel can actively view inputs and outputs during truck operation. No laptop or service terminal is required. Event code history, including the last 16 events, is accessible through the display.

The display provides a convenient interface for operators, keeping them informed (operational hours, BDI, operator messages, event codes) of any changes impacting truck performance and allowing them to choose from three performance profiles when enabled (3040/3060).

Performance tuning can be accessed at the display to customise truck performance for specific applications or operator requirements. In addition, up to 25 PIN codes can be assigned to individual operators and matched to one of the pre-programmed performance profiles if desired.

Power unit suspension

The power unit suspension uses hard-plated chrome rods and sealed slide bushings for long life without adjustment. The suspension provides 60 mm of travel with constant drive tyre pressure for excellent performance on ramps. Combined with spring-loaded casters, the system reduces shocks to the chassis, mounted components and the operator. Active traction, standard on trucks with electric steering, uses hydraulic pressure to increase traction. Reduced slipping and improved braking are especially helpful on steep or wet ramps.

e-GEN braking system

The power of the high-torque AC traction motor is used to stop the truck and keep it static until a travel input is requested, even when operating on a gradient. This system eliminates adjustments and wear points for a lifetime of maintenance-free use.

An automatic parking brake activates if the truck is stopped and the operator leaves the platform or power is disconnected.

Safety regulations

Conforms to European safety standards.

Dimensions and performance data given may vary due to manufacturing tolerances. Performance is based on an average-sized vehicle and is affected by weight, condition of truck, how it is equipped and the conditions of the operating area. Crown products and specifications are subject to change without notice.

WT 3000 SPEC GB 10/25, 10
Printed in Germany

ISO 9001 Quality management system certified for the design, development, manufacture, sale and product support of industrial trucks.

European manufacturing:
Crown Gabelstapler GmbH & Co. KG

Продавец:
kupit-shtabeler.ru
+7 495 159-44-32
zakaz@kupit-shtabeler.ru