RC 5700
SERIES

Specifications
Stand-up
Counterbalance Truck

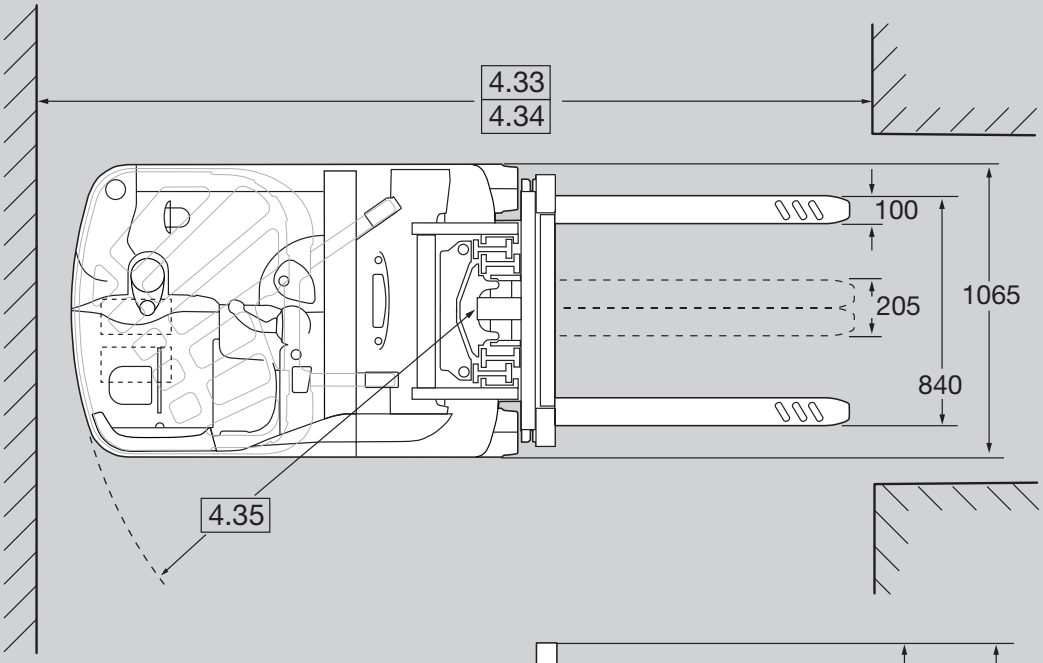

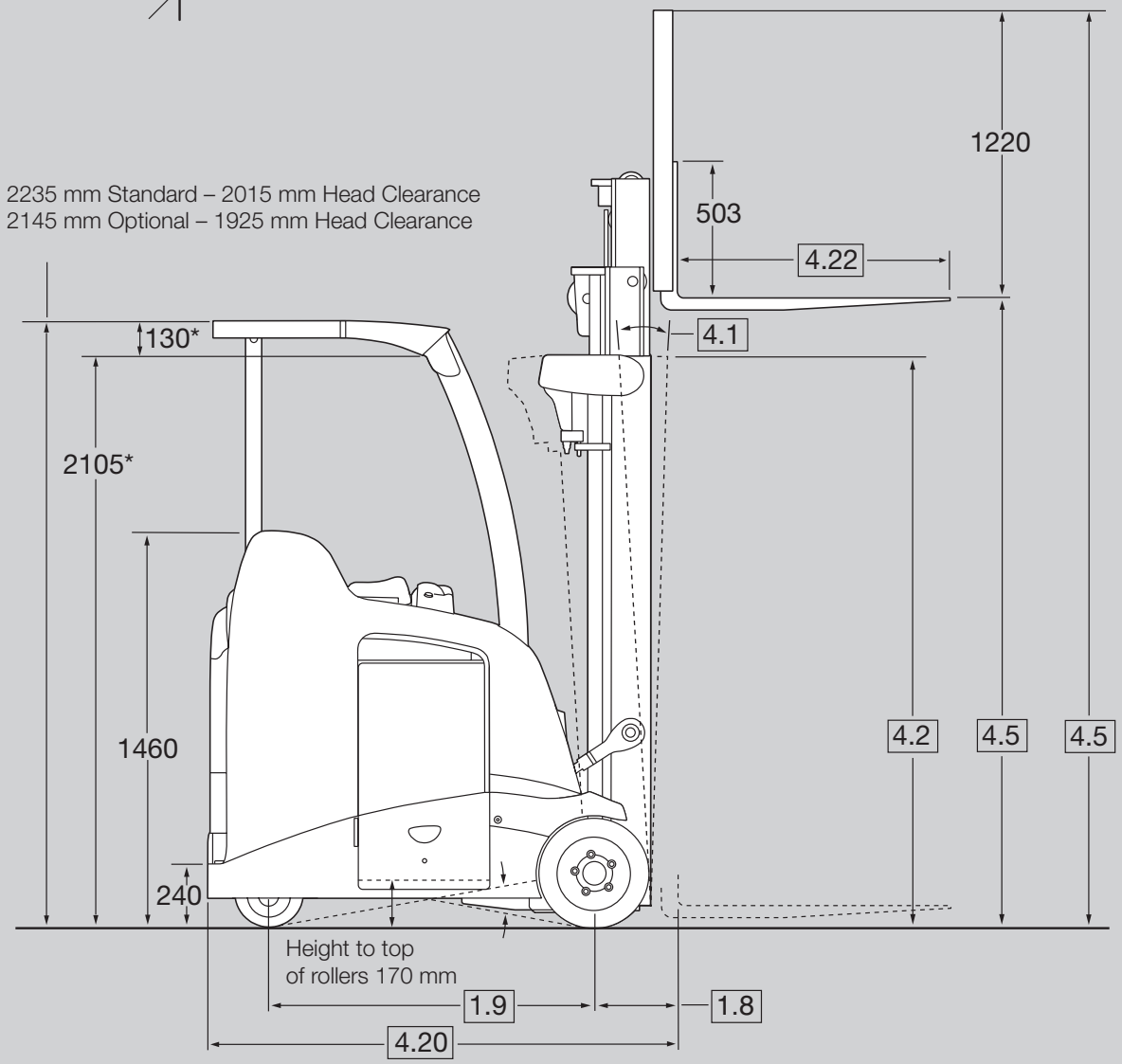

* Clearance with Drive-In application. Adjust for different overhead guard heights.

Destinguishing Mark	1.1	**Manufacturer**				Crown Equipment Corporation			
	1.2	**Model**				RC 5715	RC 5725	RC 5735	RC 5745
	1.3	**Power Source**				electric			
	1.4	**Operator Type**				Stand-up Rider Counterbalanced			
	1.5	**Rated Capacity ***		Q	t	1.5	1.5	1.5	1.8
	1.6	**Load Centre**	fork face to load CG	c	mm	500			
	1.8	**Load Distance**	centre of wheel to fork face	x	mm	287			292
	1.9	**Wheelbase**		y	mm	1085	1143	1198	1260
	2.1	**Service Weight**	less battery		kg	2880	2900	2690	2930
	2.2	**Axle Load with max. Battery**	without load front		kg	1810	1890	2050	2200
			without load rear		kg	1970	2035	1840	2120
Tyres/Wheels/Chassis	3.1	**Tyres**	pressed-on solid			Cushion			
	3.2	**Tyre Size**	load side		mm	406 x 178 x 267			
	3.3	**Tyre Size**	power unit side		mm	254 x 127 x 165			
	3.5	**Wheels**	number front/rear (x=driven wheels)			2x /2			
	3.6	**Tread**	load side	b_{10}	mm	890			
	3.7	**Tread**	power unit side (steer)	b_{11}	mm	170			
Dimensions	4.2	**Mast**	collapsed height	h_1	mm	see table 1			
	4.3	**Free-lift**	w. / w.o. load backrest	h_2	mm	see table 1			
	4.4	**Lift Height**		h_3	mm	see table 1			
	4.5	**Mast Extended Height**	w. / w.o. load backrest	h_4	mm	see table 1			
	4.7	**Overhead Guard Height**	standard / option	h_6	mm	2235 / 2145			
	4.8	**Seat Height relating to SIP/Stand Height**		h_7	mm	240			
	4.20	**Head Length ****		l_2	mm	1598	1656	1715	1781
	4.21	**Overall Width**			mm	1065			
	4.22	**Fork Dimensions**	standard	s/e/l	mm	38 x 102 x 915			45x102x915
			optional lengths		mm	760, 990, 1065, 1145, 1220, 1370, 1525			
	4.23	**Fork Carriage ISO 2328, Class/Type A**				2A, Class II			
	4.24	**Fork Carriage Width**	range		mm	205 - 840			
	4.31	**Ground Clearance**	lowest point, below mast	m_1	mm	76			
	4.32	**Ground Clearance**	centre wheelbase	m_2	mm	107			
	4.34.1	**Aisle Width for Pallets 1000 × 1200 crossways**		A_{st3}	mm	see table 2			
	4.34 2	**Aisle Width for Pallets 800 × 1200 lengthways**		A_{st3}	mm	see table 2			
	4.35	**Turning Radius**		Wa	mm	1313	1372	1427	1488
Performance Data	5.1	**Travel Speed std.**	with / without load		km/h	11.6 / 11.6			
		with Productivity Package	with / without load		km/h	11.6 / 12.6			
	5.2	**Lift Speed**	with / without load		m/s	0.33 / 0.56			0.28 / 0.56
	5.3	**Lowering Speed**	with / without load		m/s	0.46 / 0.46			
	5.10	**Service Brake**	service / parking			Foot-Motor / Auto-Electric			
Electric Motor	6.1	**Traction Motor**	rating at S2 60 min.		kW	2 x 4.8			
	6.2	**Pump Motor**	rating at S3 15%		kW	7.9			
	6.3	**Battery, Type Lead Acid**	according to DIN 43531/35/36			B	C	D	E
	6.4	**Battery Voltage**	nominal capacity 5h rating		V/Ah	36/775	36/930	36/1085	36/1240
	6.5	**Battery Weight**	min. weight		kg	780	905	1035	1180
			max. weight		kg	895	1025	1200	1390
			compartment size – max. length		mm	350	410	465	525
			compartment size – max. width		mm	979			
			compartment size – max. height		mm	787			
		Battery Floor Height	with rollers		mm	170			
	10.1	**Available Working Pressure for Attachments**		bar (psi)		up to 175 (2500)			
	10.2	**Oil Volume for Attachments**	low / high		l/min.	up to 15 / 30			

* Optional masts, attachments, longer load dimensions and higher lifting heights may result in derating of the capacity. Contact Crown sales department.

** Add 108 mm for quad masts, add 36 mm for Crown integrated sideshift, add 59 mm for hook on sideshift.

Table 1 Lift Height

	Truck Type				RC 5700 1.5 & 1.8								RC 5700 1.8				
	Mast Type				**TT**							**Quad**					
4.1	**Mast Tilt, Fork Carriage**	forward/backward	a/ß	°	5/1.5	5/3	5/5	5/5	5/5	5/5	5/5	5/3	5/3	5/3	5/3	5/3**	5/3
4.2	**Mast Collapsed Height**		h_1	mm	1445	1805	2110	2265	2415	2570	2720	2665	2840	3035	3225	3350	2490
4.3	**Free-lift**	with load backrest *	h_2	mm	160	510	815	970	1120	1275	1430	840	920	995	1070	1145	1225
		without load backrest	h_2	mm	875	1225	1530	1685	1835	1990	2145	1555	1635	1710	1785	1860	1940
4.4	**Lift Height**		h_3	mm	**2845**	**3910**	**4825**	**5280**	**5740**	**6195**	**6650**	**6095**	**6245**	**6550**	**6705**	**7010**	**7165**
4.5	**Mast Extended Height**	with load backrest *	h_4	mm	4065	5135	6050	6505	6960	7420	7875	7320	7470	7775	7925	8230	8385
		without load backrest	h_4	mm	3350	4420	5335	5790	6245	6705	7160	6605	6755	7060	7210	7515	7670

* With 1220 mm load backrest

Table 2 Working Aisle Width

	TT-Mast				RC 5715-1.5	RC 5725-1.5	RC 5735-1.5	RC 5745-1.8
1.9	**Wheelbase**	forward/backward	y	mm	1085	1145	1200	1260
4.35	**Turning Radius**		Wa	mm	1315	1375	1430	1490
4.34	**Aisle Width, AST3**	Pallet 800 x 1200 mm	lxw	mm	2755	2815	2870	2935
		Pallet 1200 x 800 mm	lxw	mm	3050	3110	3165	3230
4.33		Pallet 1000 x 1200 mm	lxw	mm	2930	2990	3045	3110
		Pallet 1200 x 1000 mm	lxw	mm	3080	3140	3195	3260

Standard Equipment

1. Crown's Access 1 2 3® Comprehensive System Control
2. e-GEN® Braking System with automatic parking brake
3. Intrinsic Stability System™
   - Travel speed reduction and appropriate brake control when forks are above free lift
   - Forward tilt interlock above staging
   - Controlled tilt speeds
   - Counterweight exceeds required standards
   - Cornering speed control
   - Ramp hold
   - Ramp speed control
4. FlexRide™ Suspension
5. Operator compartment
   - Crown flexible side stance
   - Padded back support with integral side restraint
   - Premium rubber floor mat
   - Padded arm rest
   - Operator console with desk top work surface and storage
   - Entry bar
   - Posture relief step
6. Multi-task control handle
7. Tilt position assist
8. Crown display
   - Battery discharge indicator with lift interrupt and re-key feature
   - Hour meters / travel distance / stop watch
   - Pin code access capable
   - Event code display with five (5) key navigation
   - Access 1 2 3 diagnostics
   - P1, P2, P3 Performance tuning
9. AC hydraulics and ondemand steering
10. 36-volt system
11. 320 SBE grey battery connector
12. InfoPoint™ System
13. Colour-coded wiring
14. Battery rollers
15. Dual Ø 254 mm cushion steer tyres
16. Large Ø 406 mm cushion drive tyres
17. Crown-manufactured drive and lift motors
18. High visibility power unit
19. Radial design overhead guard with third post
20. High visibility mast with inline hose routing
21. Hydrostatic power steering
22. 5° forward tilt
23. 1220 mm high load backrest
24. Forward steering

Optional Equipment

1. Load backrest heights
2. Tilt options
3. Fork lengths
4. Sideshifter
5. Hydraulic valves for attachments
6. Quick disconnect hydraulic connectors
7. Freezer and corrosion conditioning
8. Productivity package
9. Audible travel alarms
10. Reverse steering
11. Suspended floorboard
12. Adjustable armrest
13. Knee pad
14. Drive-in rack overhead guard
15. Overhead guard heights
16. Visual warning devices
    - Floor spot lights
    - Floor line lights - side lights only
    - Floor line lights - side and rear lights
    - Flashing lights
17. Work lights
18. Dome lights
19. Positive/Negative accessory cable
20. Non-marking smooth or lug rubber tyres
21. V-Force® Lithion-Ion ready
22. InfoLink® ready
23. Work Assist™ Accessories
    - Clip pad and hook
    - Clamp and mounting plate
    - Storage Pocket
    - Organisation kits

Operator Compartment

Soft, rounded surfaces make the compartment interior more com fortable. Streamlined exterior aids entry/exit for the operator together with a low floor height (240 mm).

A patented FlexRide suspended floor provides a comfortable ride for a wide range of operators.

A footrest provides postural relief during stationary tasks.

Crown's flexible side stance allows the operator to change positions to increase comfort and productivity.

An entry bar with sensors automatically slows travel and sounds an audible alarm when activated, encouraging safe foot positioning inside the truck.

The Multi-Task Control Handle with intuitive operation reduces the operator learning curve.

Blending of hydraulic control functions and traction can improve productivity. Control handle activation forces are reduced. Soft grip steer tiller with hydrostatic steering reduces operator fatigue.

Operator visibility is improved with:

- Low-profile sculpted power unit
- High visibility mast
- Angled overhead guard post and placement
- Radial design overhead guard
- Flexible side stance

Crown Drive System

Crown has applied the latest generation AC drive system, enhanced with Access 1 2 3® technology. The demand for high efficiency systems that closely match customer torque requirements is met with this generation control system.

Crown-manufactured, independently controlled, AC drive motors are specifically designed to optimise system integration between the traction and braking controls.

Crown's Access 1 2 3® technology provides optimum performance and control by offering a communication interface for operators and technicians, intelligent coordination of lift truck system and simplified service with advanced diagnostics.

The Crown display is used for easy troubleshooting, access service history and set performance features. A distribution panel is conveniently located with all test points, control fuses and central wiring for easy troubleshooting.

Three modes of performance can be selected to accommodate operator experience or application requirements.

e-GEN® Braking System

Variable regenerative motor braking is optimised and virtually eliminates brake maintenance. The appropriate amount of stopping force is applied to match operator brake input and the current operating conditions of the truck.

The closed loop Access 1 2 3® traction control will keep the truck static until a travel input is requested, even when operating on a grade.

Automatic electric parking brakes activate when the operator releases the brake pedal, a travel input has not been requested or battery power has been disconnected.

Steering

Load-sense hydrostatic steering is an on-demand system which reduces energy consumption. Smooth, quiet steering control with minimal operator effort required at the steer tiller. Steer tyres rotate 182° for maximum manoeuvrability. Crown's hydrostatic steering system is simplified with significantly fewer parts, thus reducing maintenance requirements.

Hydraulics

The hydraulic system provides continuous filtration.

A pressurized steel hydraulic tank reduces oil misting and contamination. Hydraulic attachments can be added easily in the field.

Hydraulic manifold is mounted on the mast reducing the number of hoses and fittings.

Ram displacement type lift cylinders and two double acting tilt cylinders are Crown-manufactured.

All rams and piston rods are hard chrome plated to reduce pitting and extend cylinder packing life.

O-ring face seal fittings are used to eliminate leaks.

Mast Assembly

Crown-manufactured mast assembly utilises a “flush-face” interlocked I-beam design to improve visibility and reduce truck length. Roller bearing studs are welded on both sides of the rails for maximum strength and roller bearings are canted to run in the thick cross section of the rail. Tie bars wrap around the rails for added strength and to resist off-centre load forces.

“In-line” hose routing opens up visibility. Cylinders are placed to the sides to create a high visibility design. The mast has four points of attachment to the truck for good load force distribution. Two mounting points are at the frame, where tilt cylinders attach. Tilt cylinders use spherical bushings to resist off centre load distortions. Two large diameter studs secure the mast to the drive units.

Carriage

An ISO Class II carriage is standard. An optional hook-on type sideshifter or other attachments are easily added.

Optional fork lengths are available.

Drive Units

Two Crown-manufactured independent double reduction planetary gear drives offer 27 to 1 gear reduction. The first and second reduction use helical gears for low noise and efficiency. The drive unit gears are splash lubricated in an oil bath.

Safety Regulations

Conforms to European safety standards. Dimensions and performance data given may vary due to manufacturing tolerances. Performance is based on an average size vehicle and is affected by weight, condition of truck, how it is equipped and the conditions of the operating area. Crown products and specifications are subject to change without notice.

RC 5700 SPEC GB 07/24, 10
M03428-006-06
Printed in Germany

ISO 9001 Quality Management System certified for the design, development, manufacture, sale and product support of industrial trucks.

European Manufacturing:
Crown Gabelstapler GmbH & Co. KG

Продавец:
kupit-shtabeler.ru
+7 495 159-44-32
zakaz@kupit-shtabeler.ru