ESR 1200 SERIES

Specifications

Reach truck

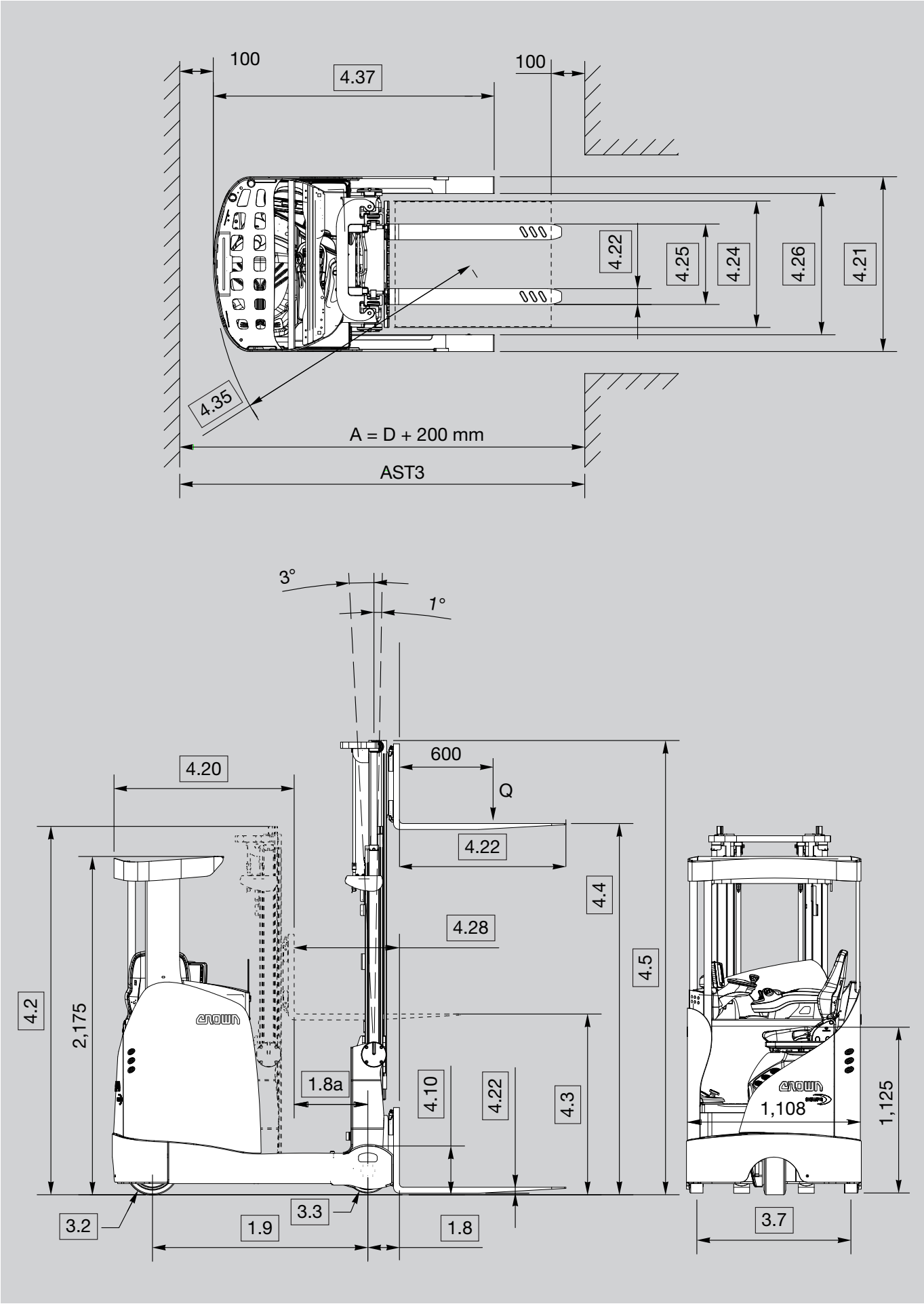
100
4.37
100
4.22
4.25
4.24
4.26
4.21
4.35
A = D + 200 mm
AST3
3°
1°
600
Q
4.20
4.22
4.4
4.28
4.5
4.2
2,175
1.8a
4.10
4.22
4.3
1,108
1,125
3.2
1.9
3.3
1.8
3.7

Distinguishing mark	1.1	**Manufacturer**				Crown Equipment Corporation			
	1.2	**Model**				ESR 1225-1.4 Tilting mast	ESR 1225-1.4 Tilting carriage	ESR 1225-1.6 Tilting mast	ESR 1225-1.6 Tilting carriage
	1.3	**Power source**				Electric			
	1.4	**Operator type**				Sit-down			
	1.5	**Rated capacity**		Q	t	1.4		1.6	
	1.6	**Load centre**		c	mm	600			
	1.8	**Load distance**	Fork advanced	x	mm	202		209	
	1.8a		Fork retracted	x1	mm	see table 6			
	1.9	**Wheelbase**		y	mm	1,380		1,475	
Weight	2.1	**Service weight**	Less battery		kg	1,855 [1]	2,153 [2]	1,990 [3]	2,306 [4]
	2.4	**Axle load**	Fork advanced		kg	see table 3			
	2.5		Fork retracted		kg	see table 3			
Tyres/wheels/chassis	3.1	**Tyres**	Front/rear			Vulkollan			
	3.2	**Tyre size**	Front		mm	343 x 114			
	3.3		Rear		mm	285 x 80			
	3.5	**Wheels**	Number front/rear (x=drive wheels)			1x / 2			
	3.7	**Track width**	Rear	b11	mm	see table 2			
Dimensions	4.1	**Tilt of mast**	Forward/backward	α / β	°	see table 5	-	see table 5	-
		Tilt of fork carriage	Forward/backward	α / β	°	-	2 / 4	-	2 / 4
	4.2	**Mast**	Collapsed height	h1	mm	see table 5	see table 4	see table 5	see table 4
	4.3	**Free-lift**	Without load backrest	h2	mm	see table 5	see table 4	see table 5	see table 4
	4.4	**Lift height**		h3	mm	see table 5	see table 4	see table 5	see table 4
	4.5	**Mast extended height**	Extended height, without load backrest	h4	mm	see table 5	see table 4	see table 5	see table 4
	4.7	**Overhead guard height**	Low / Standard	h6	mm	2,175 / 2,300			
	4.8	**Seat height relating to SIP**		h7	mm	1,125			
	4.10	**Outrigger height**			mm	312			
	4.15	**Fork height**		h13	mm	38		45	
	4.20	**Head length**		l2	mm	see table 6			
	4.21	**Overall width**		b1	mm	1,120			
	4.22	**Fork dimensions**	DIN ISO 2331	s	mm	38		45	
				e x l	mm	102 x 1,145			
	4.23	**Fork carriage ISO 2328, class/type A, B**				2 A			
	4.24	**Fork carriage width**	Without load backrest	b3	mm	750 [5]	750		
	4.25	**Fork spread**		b5	mm	see table 2			
	4.26	**Inside straddle dimension**		b4	mm	see table 2			
	4.28	**Reach**		l4	mm	see table 6			
	4.32	**Ground clearance**	Centre wheelbase	m2	mm	76			
	4.34.1	**Aisle width**	For pallets 1,000×1,200 crossways	Ast	mm	see table 6			
	4.34.2		For pallets 800×1,200 lengthways	Ast	mm	see table 6			
	4.35	**Turning radius**		Wa	mm	1,638		1,733	
	4.37	**Length across outriggers**		l7	mm	1,800		1,895	
Performance data	5.1	**Travel speed**	With load/without load		km/h	10.0 / 10.0 [6]	11.0 / 11.0	10.0 / 10.0 [6]	11.0 / 11.0
	5.2	**Lift speed**	With load/without load		m/s	0.4 / 0.6			
	5.3	**Lowering speed**	With load/without load		m/s	0.5 / 0.5			
	5.4	**Reaching speed**	With load/without load		m/s	0.18 / 0.18			
	5.8	**Max. gradability**	With load/without load		%	12 / 12			
	5.10	**Service brake**	Regenerative, electric / load wheel brake			Regen. / no	Regen. / 2x	Regen. / 1x	Regen. / 2x
Electric motor	6.1	**Traction motor**	60 min. rating		kW	9			
	6.2	**Pump motor**	15% on time		kW	11.2			
	6.3	**Max. battery box size**		l x h x w	mm	see table 1			
	6.4	**Battery voltage**	Nominal capacity 5 h rating		V/Ah	48 / see table 1			
	6.5	**Battery weight**			kg	see table 1			
	6.7	**Battery tray height**	With rollers / without rollers		mm	306 / 295		312 / 301	
Add.	10.1	**Available working pressure for attachments**			bar	210			
	10.7	**Sound pressure level at the operator switch (in seat)**			dB(A)	65			

[1] TL mast 2,760 mm + option 5 battery type
[2] TT mast 4,440 mm + option 5 battery type
[3] TL mast 2,760 mm + option 6 battery type
[4] TT mast 4,440 mm + option 6 battery type
[5] Fork carriage without integrated sideshift: 810 mm
[6] 1 km/h less in fork direction
TL = telescopic limited free-lift mast
TT = triple-telescopic mast

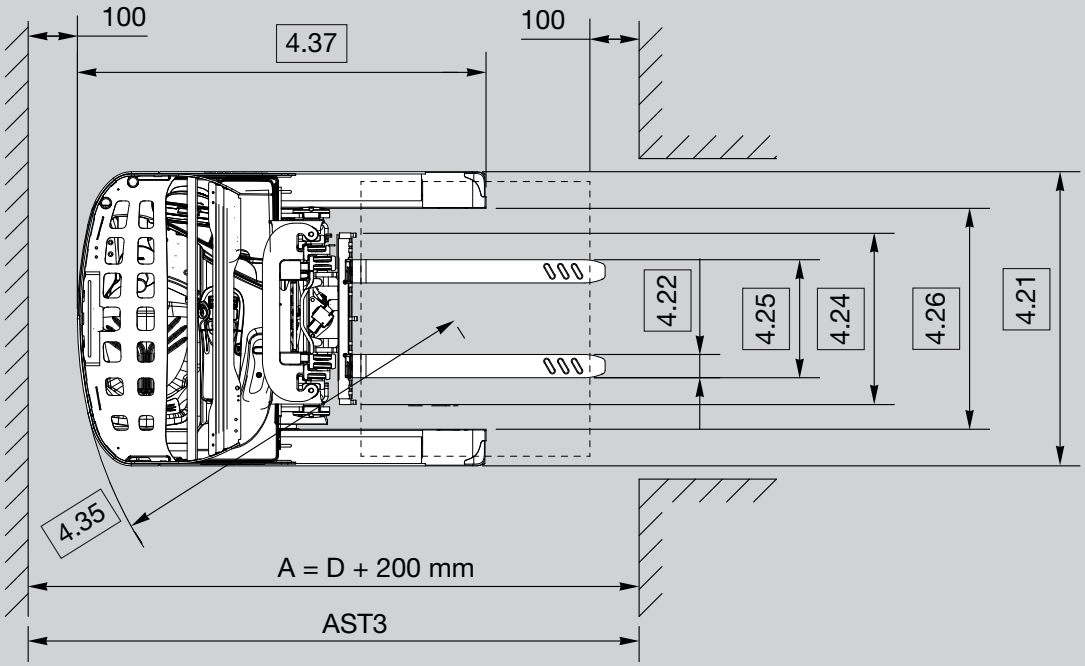
100
4.37
100
4.22
4.25
4.24
4.26
4.21
4.35
A = D + 200 mm
AST3

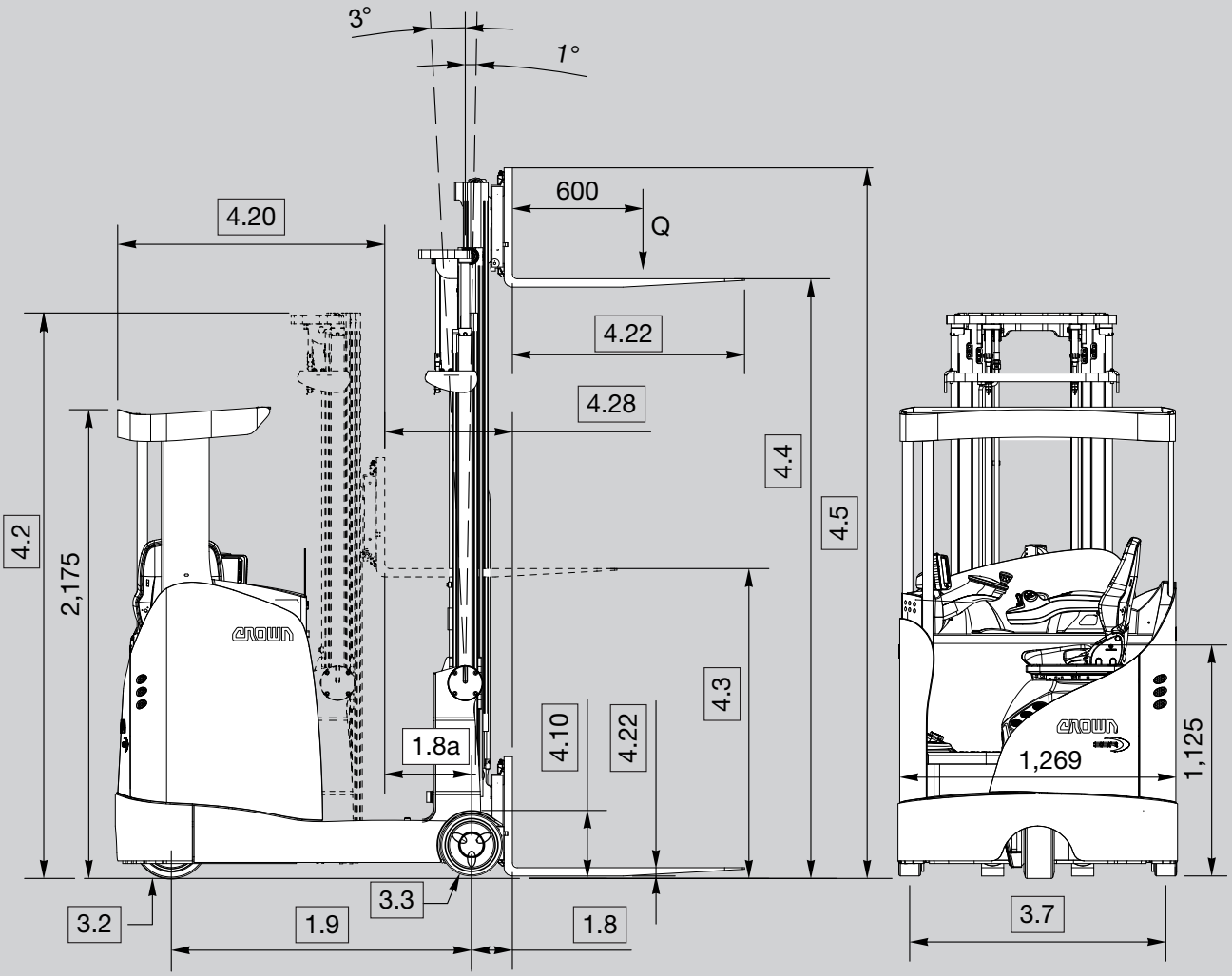
3°
1°
600
Q
4.20
4.22
4.28
4.4
4.5
4.2
2,175
4.3
4.10
4.22
1.8a
3.3
3.2
1.9
1.8
1,269
1,125
3.7

Distinguishing mark	1.1	**Manufacturer**				Crown Equipment Corporation				
	1.2	**Model**				ESR 1245 1.4 Tilting mast	ESR 1245 1.4 Tilting carriage	ESR 1245 1.6 Tilting mast	ESR 1245 1.6 Tilting carriage	ESR 1245 2.0 Tilting carriage
	1.3	**Power source**				Electric				
	1.4	**Operator type**				Sit-down				
	1.5	**Rated capacity**		Q	t	1.4		1.6		2.0
	1.6	**Load centre**		c	mm	600				
	1.8	**Load distance**	Fork advanced	x	mm	187		217		
	1.8a		Fork retracted	x1	mm	see table 7	see table 8	see table 7	see table 8	
	1.9	**Wheelbase**		y	mm	1,380		1,475		
Weight	2.1	**Service weight**	Less battery		kg	2,055 [1]	2,387 [2]	2,190 [1]	2,467 [2]	2,555 [3]
	2.4	**Axle load**	Fork advanced		kg	see table 3				
	2.5		Fork retracted		kg	see table 3				
Tyres/wheels/chassis	3.1	**Tyres**	Front/rear			Vulkollan				
	3.2	**Tyre size**	Front		mm	343 x 114				343 x 140
	3.3		Rear		mm	285 x 100 [4]		330 x 100 [5]		330 x 100
	3.5	**Wheels**	Number front/rear (x=drive wheels)			1x / 2				
	3.7	**Track width**	Rear	b11	mm	see table 2				
Dimensions	4.1	**Tilt of mast**	Forward/backward	α / β	°	see table 5	-	see table 5	-	
		Tilt of fork carriage	Forward/backward	α / β	°	-	2 / 4	-	2 / 4	
	4.2	**Mast**	Collapsed height	h1	mm	see table 5	see table 4	see table 5	see table 4	
	4.3	**Free-lift**	Without load backrest	h2	mm	see table 5	see table 4	see table 5	see table 4	
	4.4	**Lift height**		h3	mm	see table 5	see table 4	see table 5	see table 4	
	4.5	**Mast extended height**	Extended height, without load backrest	h4	mm	see table 5	see table 4	see table 5	see table 4	
	4.7	**Overhead guard height**	Low / Standard	h6	mm	2,175 / 2,300				
	4.8	**Seat height relating to SIP**		h7	mm	1,125				
	4.10	**Outrigger height**			mm	301		346		
	4.15	**Fork height**		h13	mm	38		45		
	4.20	**Head length**		l2	mm	see table 7	see table 8	see table 7	see table 8	
	4.21	**Overall width**		b1	mm	1,285				
	4.22	**Fork dimensions**	DIN ISO 2331	s	mm	38		45		
				e x l	mm	102 x 1,145				
	4.23	**Fork carriage ISO 2328, class/type A, B**				2 A				
	4.24	**Fork carriage width**	Without load backrest	b3	mm	750 [6]	750			
	4.25	**Fork spread**		b5	mm	see table 2				
	4.26	**Inside straddle dimension**		b4	mm	see table 2				
	4.28	**Reach**		l4	mm	see table 7	see table 8	see table 7	see table 8	
	4.32	**Ground clearance**	Centre wheelbase	m2	mm	76				
	4.34.1	**Aisle width**	For pallets 1,000×1,200 crossways	Ast	mm	see table 7	see table 8	see table 7	see table 8	
	4.34.2		For pallets 800×1,200 lengthways	Ast	mm	see table 7	see table 8	see table 7	see table 8	
	4.35	**Turning radius**		Wa	mm	1,645 [10]		1,734 [10]		
	4.37	**Length across outriggers**		l7	mm	1,785 [10]		1,903 [10]		
Performance data	5.1	**Travel speed**	With load/without load		km/h	10.0/10.0 [7]	11.0/11.0 [8]	10.0/10.0 [7]	11.0/11.0 [8]	
	5.2	**Lift speed**	With load/without load		m/s	0.4 / 0.6				
	5.3	**Lowering speed**	With load/without load		m/s	0.5 / 0.5				
	5.4	**Reaching speed**	With load/without load		m/s	0.18 / 0.18				
	5.8	**Max. gradability**	With load/without load		%	12 / 12 [11]				
	5.10	**Service brake**	Regenerative, electric / load wheel brake			regen./no	regen./2x	regen./1x	regen./2x	regen./2x
Electric motor	6.1	**Traction motor**	60 min. rating		kW	9				
	6.2	**Pump motor**	15% on time		kW	11.2			11.2 [9]	17.1
	6.3	**Max. battery box size**		lxhxw	mm	see table 1				
	6.4	**Battery voltage**	Nominal capacity 5 h rating		V/Ah	48 / see table 1				
	6.5	**Battery weight**			kg	see table 1				
	6.7	**Battery tray height**	With rollers / without rollers		mm	311 / 300		321 / 310		
Add.	10.1	**Available working pressure for attachments**			bar	210				
	10.7	**Sound pressure level at the operator switch (in seat)**			dB(A)	65				

[1] TL mast 2,760 mm + option 1 battery type
[2] TT mast 4,440 mm + option 1 battery type
[3] TT mast 4,145 mm + option 2 battery type
[4] Narrow outriggers 285 x 80 mm
[5] Narrow outriggers 330 x 80 mm
[6] Fork carriage without integrated sideshift: 810 mm
[7] 1 km/h less in fork direction
[8] High travel speed option: 14.0 / 14.0 km/h
[9] For super duty mast: 17.1 kW
[10] Cold store cabin: add 100 mm
[11] Lift height >12,030 mm: 9/9
TL = telescopic limited free-lift mast
TT = triple-telescopic mast

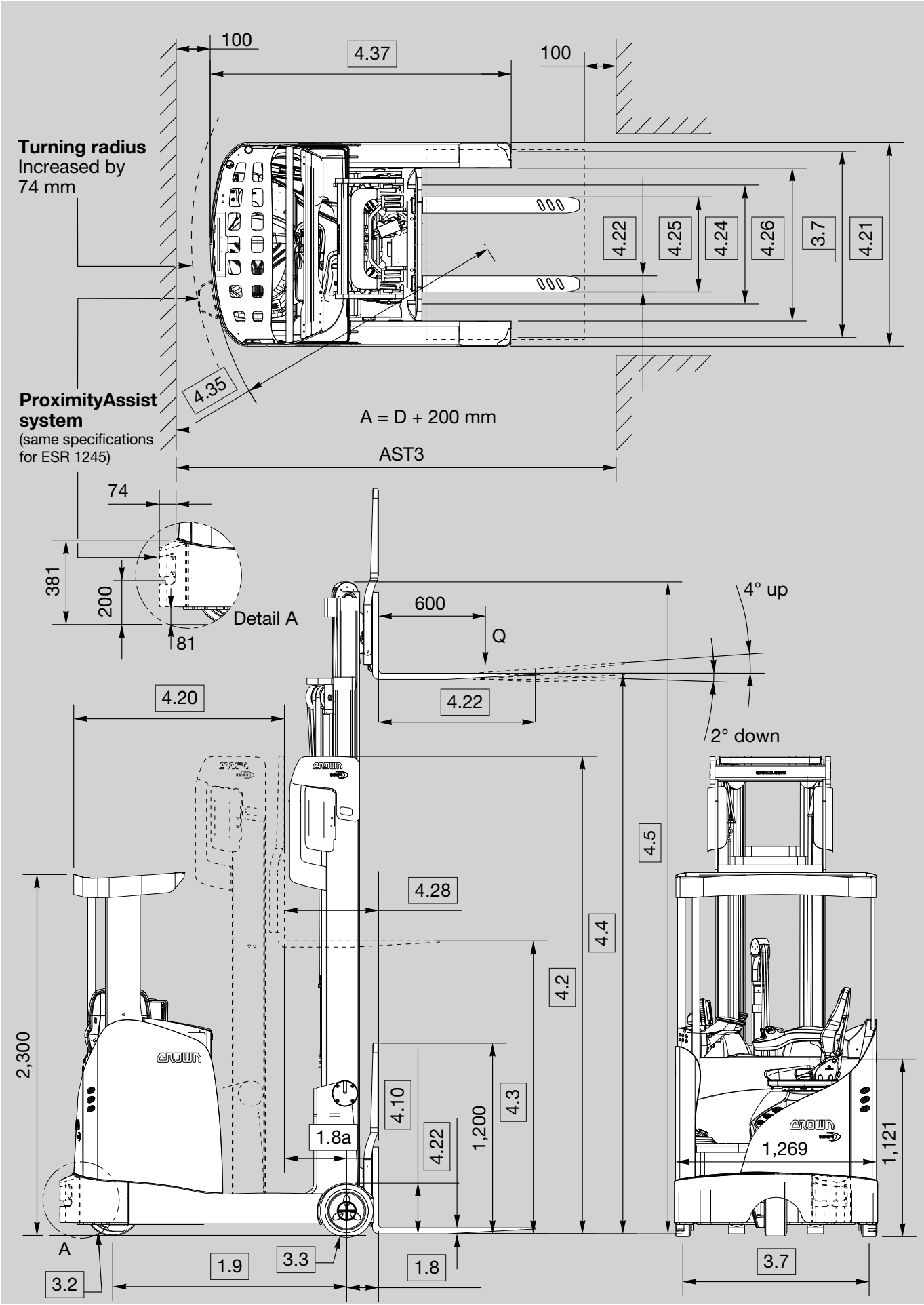
100
4.37
100
Turning radius
Increased by
74 mm
4.22
4.25
4.24
4.26
3.7
4.21
4.35
ProximityAssist
system
(same specifications
for ESR 1245)
A = D + 200 mm
AST3
74
381
200
81
Detail A
600
Q
4° up
2° down
4.20
4.22
4.28
4.5
4.4
4.2
4.3
4.10
4.22
1,200
1.8a
2,300
A
3.2
1.9
3.3
1.8
1,269
1,121
3.7

Distinguishing mark	1.1	**Manufacturer**				Crown Equipment Corporation		
	1.2	**Model**				ESR 1265-1.4 Tilting carriage	ESR 1265-1.6 Tilting carriage	ESR 1265-2.0 Tilting carriage
	1.3	**Power source**				Electric		
	1.4	**Operator type**				Sit-down		
	1.5	**Rated capacity**		Q	t	1.4	1.6	2.0
	1.6	**Load centre**		c	mm	600		
	1.8	**Load distance**	Fork advanced	x	mm	187	217	
	1.8a		Fork retracted	x1	mm	see table 8		
	1.9	**Wheelbase**		y	mm	1,380	1,475	
Weight	2.1	**Service weight**	Less battery		kg	2,534 [1]	2,557 [1]	2,661 [2]
	2.4	**Axle load**	Fork advanced		kg	see table 3		
	2.5		Fork retracted		kg	see table 3		
Tyres/wheels/chassis	3.1	**Tyres**	Front/rear			Vulkollan		
	3.2	**Tyre size**	Front		mm	343 x 140		
	3.3		Rear		mm	285 x 100 [3]	330 x 100 [4]	330 x 100
	3.5	**Wheels**	Number front/rear (x=drive wheels)			1x / 2		
	3.7	**Track width**	Rear	b11	mm	see table 2		
	4.1	**Tilt of fork carriage**	Forward/backward	α / β	°	2 / 4		
	4.2	**Mast**	Collapsed height	h1	mm	see table 4		
	4.3	**Free-lift**	Without load backrest	h2	mm	see table 4 *		
	4.4	**Lift height**		h3	mm	see table 4		
	4.5	**Mast extended height**	Extended height, without load backrest	h4	mm	see table 4 **		
	4.7	**Overhead guard height**	Low / Standard	h6	mm	2,175 / 2,300		
	4.8	**Seat height relating to SIP**		h7	mm	1,113		
	4.10	**Outrigger height**			mm	301	346	
	4.15	**Fork height**		h13	mm	38	45	
	4.20	**Head length**		l2	mm	see table 8		
	4.21	**Overall width**	Front/rear	b1	mm	see table 2		
	4.22	**Fork dimensions**	DIN ISO 2331	s	mm	38	45	
				e x l	mm	102 x 1,145		
	4.23	**Fork carriage ISO 2328, class/type A, B**				2 A		
	4.24	**Fork carriage width**	With / without load backrest	b3	mm	770 / 750		
	4.25	**Fork spread**		b5	mm	see table 2		
	4.26	**Inside straddle dimension**		b4	mm	see table 2		
	4.28	**Reach**		l4	mm	see table 8		
	4.32	**Ground clearance**	Centre wheelbase	m2	mm	76		
	4.34.1	**Aisle width**	For pallets 1,000×1,200 crossways	Ast	mm	see table 8		
	4.34.2		For pallets 800×1,200 lengthways	Ast	mm	see table 8		
	4.35	**Turning radius**		Wa	mm	1,645 [5]	1,734 [5]	
	4.37	**Length across outriggers**		l7	mm	1,785 [5]	1,903 [5]	
Performance data	5.1	**Travel speed**	With load/without load		km/h	14.0 / 14.0		
	5.2	**Lift speed**	With 1,000 kg load / without load		m/s	0.58 / 0.80		0.58 / 0.71
	5.3	**Lowering speed**	With load/without load		m/s	0.57 / 0.57		0.57 / 0.50
		Xpress Lower speed	With load/without load		m/s	1.1 / 1.1		
	5.4	**Reaching speed**	With load/without load		m/s	0.21 / 0.21		
	5.8	**Max. gradability**	With load/without load		%	12 / 12 [6]		
	5.10	**Service brake**	Regenerative, electric / load wheel brake			Regen. / 2x		
Electric motor	6.1	**Traction motor**	60 min. rating		kW	9		
	6.2	**Pump motor**	15% on time		kW	17.1		
	6.3	**Max. battery box size**		lxhxw	mm	see table 1		
	6.4	**Battery voltage**	Nominal capacity 5 h rating		V/Ah	48 / see table 1		
	6.5	**Battery weight**			kg	see table 1		
	6.7	**Battery tray height**	With rollers / without rollers		mm	311 / 300	321 / 310	
Add.	10.1	**Available working pressure for attachments**			bar	210		
	10.7	**Sound pressure level at the operator switch (in seat)**			dB(A)	65		

[1] TT mast 4,890 mm + option 1 battery type
[2] TT mast 4,595 mm + option 2 battery type
[3] Narrow outriggers 285 x 80 mm
[4] Narrow outriggers 330 x 80 mm
[5] Cold store cabin: add 100 mm
[6] Lift height >12,030 mm: 9/9

* with load backrest 1.4 / 1.6 t -650 mm; 2.0 t -535 mm
** with load backrest 1.4 / 1.6 t +650 mm; 2.0 t +535 mm
TT = triple-telescopic mast

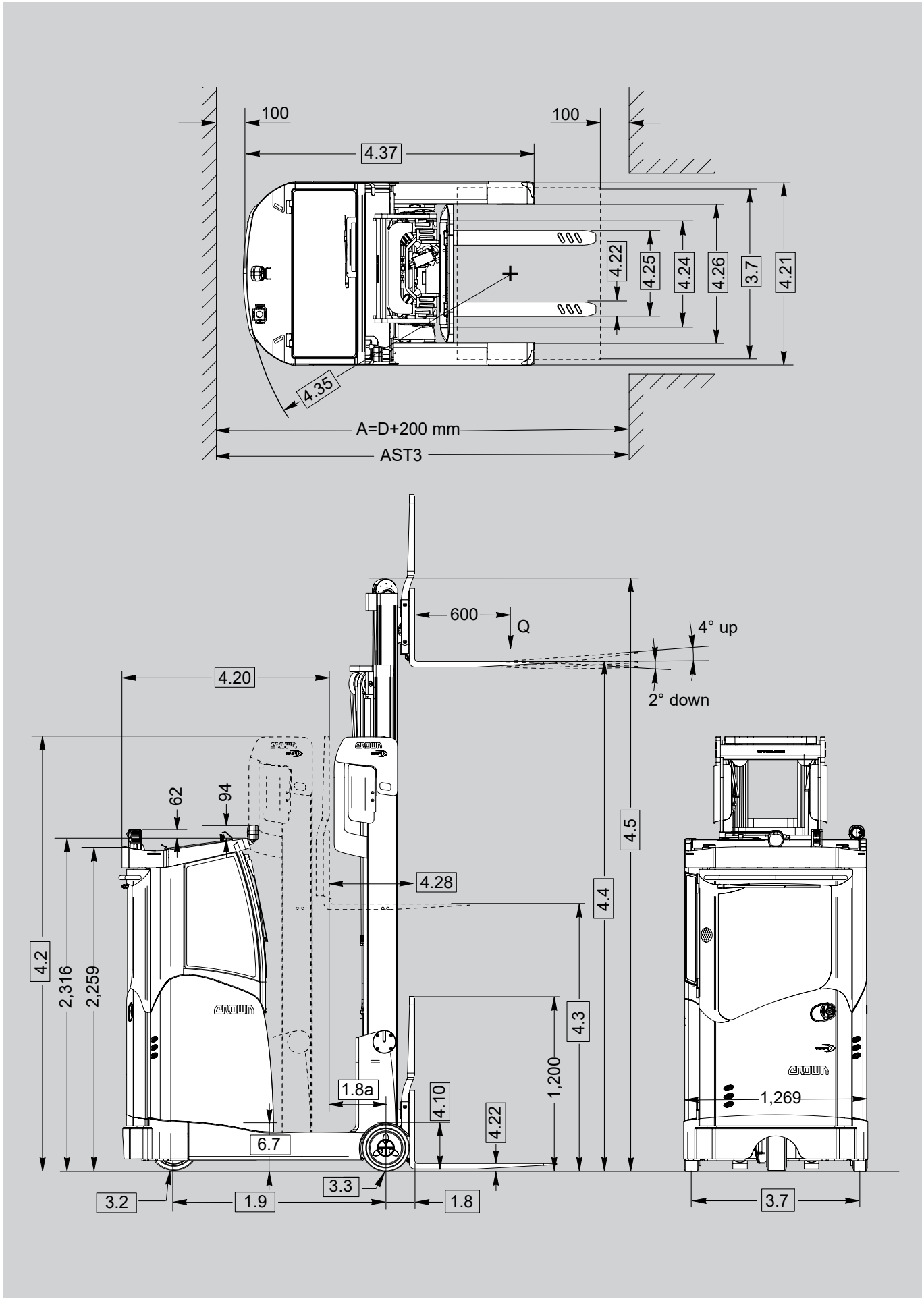
100
100
4.37
4.22
4.25
4.24
4.26
3.7
4.21
4.35
A=D+200 mm
AST3
600
Q
4° up
2° down
4.20
62
94
4.5
4.28
4.4
4.2
2,316
2,259
4.3
1,200
1.8a
4.10
4.22
6.7
3.3
3.2
1.9
1.8
1,269
3.7

Table 1 Battery

	Battery type		DIN C				DIN B					
			Option 1	Option 2	Option 3	Option 4	Option 5	Option 6	Option 7	Option 8		
6.4	**Battery capacity**	Ah	420–465	560–620	700–775	840–930	280–310	420–465	560–620	700–775		
6.5	**Battery weight min.–max.**	kg	713–838	892–1,056	1,063–1,258	1,241–1,467	542–621	709–816	890–1,027	1,063–1,202		
6.3	**Battery box size**		Width				Width				Length	Height
	ESR 1225-1.4	mm	-	-	-	-	263	353	443	-	1,035	784
	ESR 1225-1.6	mm	-	-	-	-	-	353	443	533		
	ESR 1245-1.4	mm	283	355	427	-	-	-	-	-	1,223	784
	ESR 1245-1.6	mm	283	355	427	499	-	-	-	-		
	ESR 1245-2.0	mm	-	355	427	499	-	-	-	-		
	ESR 1265-1.4	mm	283	355	427	-	-	-	-	-		
	ESR 1265-1.6	mm	283	355	427	499	-	-	-	-		
	ESR 1265-2.0	mm	-	355	427	499	-	-	-	-		

Table 2 Chassis frame

				ESR 1225 **ESR 1245** **ESR 1265**	Standard	Standard Standard	Option Option	Option Option	Option Option
3.7	**Track width – rear**	b_{11}	mm	985	1,177	1,146	1,317	1,476
4.21	**Overall width rear – chassis bottom**	b_1	mm	1,120	1,285*	1,285*	1,425*	1,575*
	Overall width rear – chassis middle section	b_1	mm	1,108	1,269	1,269	1,269	1,269
4.24	**Fork carriage**	b_3	mm	750	750	750	750	980
4.25	**Fork spread**	b_5	mm	695	695	695	695	925
4.26	**Inside straddle dimension**	b_4	mm	905	965	1,070	1,105	1,255
	Sideshift movement	left / right	mm	50	70	70	70	100

* Load wheel protection: add 20 mm

Table 3 Axle load

					without load			**with load**		
			Fork		front	rear	total	front	rear	total
ESR 1225-1.4 with battery option 5	7525 TT	2.4	advanced	kg	1,558	1,442	3,000	783	3,617	4,400
		2.5	retracted	kg	1,882	1,118		1,626	2,774	
ESR 1245-1.4 with battery option 1	7525 TT	2.4	advanced	kg	1,536	1,664	3,200	730	3,870	4,600
		2.5	retracted	kg	1,930	1,270		1,596	3,004	
ESR 1245-2.0 with battery option 3	9175 TT	2.4	advanced	kg	2,150	2,373	4,523	1,042	5,481	6,523
		2.5	retracted	kg	2,660	1,863		2,043	4,480	
ESR 1265-1.4 with battery option 1	6100 TT	2.4	advanced	kg	1,607	1,796	3,403	807	3,996	4,803
		2.5	retracted	kg	2,164	1,239		1,941	2,862	
ESR 1265-1.6 with battery option 3	7825 TT	2.4	advanced	kg	1,890	2,103	3,993	1,037	4,556	5,593
		2.5	retracted	kg	2,437	1,556		2,174	3,419	
ESR 1265-2.0 with battery option 3	9175 TT	2.4	advanced	kg	2,150	2,373	4,523	1,042	5,481	6,523
		2.5	retracted	kg	2,660	1,863		2,043	4,480	

front = drive wheel rear = load wheels

Table 4 Mast chart **ESR 1200 Tilting carriage** (*Xpress Lower)

Mast TT			4.4 **Lift height** h_3	4.2 **Collapsed** h_1	4.3 **Free-lift** h_2	4.5 **Extended** h_4	**ESR 1225-1.4 ESR 1225-1.6**	**ESR 1245-1.4 ESR 1265-1.4**	**ESR 1245-1.6 ESR 1265-1.6**	**ESR 1245-2.0 ESR 1265-2.0**
4-roller tilting carriage	Heavy duty	mm	4,450	2,025	1,350	5,025	●	●	●	–
		mm	4,675	2,100	1,425	5,250	●	●	●	–
		mm	5,425	2,350	1,675	6,000	●	●	●	–
		mm	5,875	2,500	1,825	6,450	●	●	●	–
		mm	6,700	2,775	2,100	7,275	●	●	●	–
		mm	6,925	2,850	2,175	7,500	●	●	●	–
		mm	7,225	2,950	2,275	7,800	●	●	●	–
		mm	7,525	3,050	2,375	8,100	●	●	●	–
		mm	7,825	3,150	2,475	8,400	●	●	●	–
		mm	8,425	3,350	2,675	9,000	⑤	①	①	–
		mm	8,950	3,525	2,850	9,525	⑤	①	①	–
		mm	9,175	3,600	2,925	9,750	⑤	①	①	–
		mm	9,475	3,700	3,025	10,050	–	①	①	–
		mm	9,700	3,775	3,100	10,275	–	①	①	–
		mm	10,225	3,950	3,275	10,800	–	①	①	–
		mm	10,675	4,200	3,525	11,250	–	①	①	–
		mm	10,825	4,250	3,575	11,400	–	①	①	–
		mm	11,050	4,325	3,650	11,625	–	①	①	–
6-roller tilting carriage	Super duty	mm	10,830	4,250	3,580	11,455	–	–	①	–
		mm	11,055	4,325	3,655	11,680	–	–	①	–
		mm	11,430	4,450	3,780	12,055	–	–	①	–
		mm	12,030	4,650	3,980	12,655	–	–	①	–
	Heavy duty	mm	4,155	2,025	1,355	4,780	–	–	–	①
		mm	4,680	2,200	1,530	5,305	–	–	–	①
		mm	5,430	2,450	1,780	6,055	–	–	–	①
		mm	5,880	2,600	1,930	6,505	–	–	–	①
		mm	6,405	2,775	2,105	7,030	–	–	–	①
		mm	6,930	2,950	2,280	7,555	–	–	–	①
		mm	7,230	3,050	2,380	7,855	–	–	–	①
		mm	7,830	3,250	2,580	8,455	–	–	–	①
		mm	8,355	3,425	2,755	8,980	–	–	–	①
		mm	8,955	3,625	2,955	9,580	–	–	–	①
		mm	9,180	3,700	3,030	9,805	–	–	–	①
	Super duty	mm	9,705	3,875	3,205	10,330	–	–	–	①
		mm	9,930	3,950	3,280	10,555	–	–	–	①
		mm	10,680	4,200	3,530	11,305	–	–	–	①
		mm	10,830	4,250	3,580	11,455	–	–	–	①
		mm	11,430	4,450	3,780	12,055	–	–	–	①
		mm	12,030	4,650	3,980	12,655	–	–	–	②
		mm	12,480	4,800	4,130	13,105	–	–	–	③
	Super duty +	mm	9,955	4,425	3,755	10,580	–	–	–	②
		mm	10,705	4,675	4,005	11,330	–	–	–	②
		mm	11,455	4,925	4,255	12,080	–	–	–	②
		mm	12,055	5,125	4,455	12,680	–	–	–	②
		mm	12,430	5,250	4,580	13,055	–	–	–	③
		mm	12,655	5,325	4,655	13,280	–	–	–	③
		mm	13,030	5,450	4,780	13,655	–	–	–	③
		mm	13,555	5,625	4,955	14,180	–	–	–	③
		mm	14,205	6,075	5,405	14,830	–	–	–	③ ④

* ESR 1265 Xpress Lower collapsed h1 & free-lift h2 add 75 ± 5 mm and extended h4 add max. 25 mm (4-roller tilting carriage) or 75 mm (6-roller tilting carriage)

● = available
① = option 1 battery type not available
② = option 1 battery type and option 2 battery type not available
③ = option 1 battery type, option 2 battery type and option 3 battery type not available
④ = Xpress Lower not available, chassis width 1,425 mm recommended
⑤ = option 5 battery type not available

Table 5 Mast chart **ESR 1225 / ESR 1245 Tilting mast**

Mast				4.4 **Lift height**	4.2 **Collapsed**	4.3 **Free-lift**	4.5 **Extended**	4.1 **Tilt of mast**			
								ESR 1225-1.4 ESR 1245-1.4		**ESR 1225-1.6 ESR 1245-1.6**	
				h_3	h_1	h_2	h_4	Forward	Backward	Forward	Backward
Tilting mast	Standard duty	TL	mm	2,760	1,990	100	3,305	2°	4°	0.5°	3°
			mm	3,070	2,150		3,620				
			mm	3,490	2,360		4,045	1°	3°		
			mm	3,810	2,520		4,360				
			mm	4,080	2,650		4,630				
			mm	4,480	2,850		5,030				
			mm	4,710	2,970		5,260				
			mm	4,950	3,090		5,500				
			mm	5,250	3,240		5,800				
		TT	mm	4,210	1,935	1,415*	4,740	1°	3°	0.5°	3°
			mm	4,680	2,090	1,570*	5,210				
			mm	5,315	2,305	1,785*	5,850				
			mm	5,790	2,465	1,945*	6,325				
			mm	6,190	2,595	2,075*	6,725				
			mm	6,795	2,795	2,275*	7,320	0.5°			
			mm	7,140	2,915	2,395*	7,675				
			mm	7,500	3,030	2,515*	8,035				
			mm	7,700	3,235	2,710*	8,235				

* Free-lift h_2 with sideshift: -100 mm Extended height h_4 with sideshift: +15 mm

Table 6 Aisle width **ESR 1225**

Pallet size		**ESR 1225**			1.8a		4.20		4.28		4.34			
		Truck configuration			**Load distance**		**Head length**		**Reach**		**Aisle width**		**Add dimension**	
Pallet	Length x width	Capacity	Battery size DIN 43531B	Mast	X1		L2		L4		**AST3**		Integrated sideshift 1.4	Triplex mast TT
					1.4	1.6	1.4	1.6	1.4	1.6	**1.4**	**1.6**		
	mm	Ah		Type	mm	mm	mm	mm	mm	mm	**mm**	**mm**	mm	mm
Euro	800 x 1,200	280–310	Option 5	TL	472	-	1,166	-	674	-	**2,522**	**-**	17	14
		420–465	Option 6	TL	387	482	1,251	1,251	589	684	**2,567**	**2,612**		
		560–620	Option 7	TL	297	392	1,341	1,341	499	594	**2,621**	**2,659**		
		700–775	Option 8	TL	–	302	–	1,431	–	504	**–**	**2,713**	–	
Euro	1,200 x 800	280–310	Option 5	TL	472	–	1,166	–	674	–	**2,669**	**–**	26	22
		420–465	Option 6	TL	387	482	1,251	1,251	589	684	**2,745**	**2,755**		
		560–620	Option 7	TL	297	392	1,341	1,341	499	594	**2,826**	**2,835**		
		700–775	Option 8	TL	–	302	–	1,431	–	504	**–**	**2,917**	–	
BSI	1,000 x 1,200	280–310	Option 5	TL	472	–	1,166	–	674	–	**2,638**	**–**	21	17
		420–465	Option 6	TL	387	482	1,251	1,251	589	684	**2,696**	**2,726**		
		560–620	Option 7	TL	297	392	1,341	1,341	499	594	**2,763**	**2,788**		
		700–775	Option 8	TL	–	302	–	1,431	–	504	**–**	**2,854**	–	
BSI	1,200 x 1,000	280–310	Option 5	TL	472	–	1,166	–	674	–	**2,722**	**–**	25	21
		420–465	Option 6	TL	387	482	1,251	1,251	589	684	**2,793**	**2,808**		
		560–620	Option 7	TL	297	392	1,341	1,341	499	594	**2,871**	**2,884**		
		700–775	Option 8	TL	–	302	–	1,431	–	504	**–**	**2,961**	–	
Australian	1,165 x 1,165	280–310	Option 5	TL	472	–	1,166	–	674	–	**2,744**	**–**	23	19
		420–465	Option 6	TL	387	482	1,251	1,251	589	684	**2,810**	**2,831**		
		560–620	Option 7	TL	297	392	1,341	1,341	499	594	**2,884**	**2,901**		
		700–775	Option 8	TL	–	302	–	1,431	–	504	**–**	**2,975**	–	
Asian	1,200 x 1,200	280–310	Option 5	TL	472	–	1,166	–	674	–	**2,782**	**–**	23	19
		420–465	Option 6	TL	387	482	1,251	1,251	589	684	**2,849**	**2,869**		
		560–620	Option 7	TL	297	392	1,341	1,341	499	594	**2,923**	**2,940**		
		700–775	Option 8	TL	–	302	–	1,431	–	504	**–**	**3,013**	–	
GMA 40” x 48”	1,219 x 1,016	280–310	Option 5	TL	472	–	1,166	–	674	–	**2,742**	**–**	25	21
		420–465	Option 6	TL	387	482	1,251	1,251	589	684	**2,813**	**2,829**		
		560–620	Option 7	TL	297	392	1,341	1,341	499	594	**2,891**	**2,904**		
		700–775	Option 8	TL	–	302	–	1,431	–	504	**–**	**2,982**	–	

Table 7 Aisle width **ESR 1245 Tilting mast**

Pallet size		ESR 1245			1.8a		4.20	4.28		4.34			
		Truck configuration			**Load distance**		**Head length**	**Reach**		**Aisle width**		**Add dimension**	
Pallet	Length x width	Capacity	Battery size DIN 43531C	Mast	X1		L2	L4		**AST3**		Integrated sideshift 1.4	Triplex mast
					1.4	1.6	1.4/1.6	1.4	1.6	**1.4**	**1.6**		
	mm	Ah		Type	mm	mm	mm	mm	mm	**mm**	**mm**	mm	mm
Euro	800 x 1,200	420–465	Option 1	TL	452	547	1,186	639	734	**2,539**	**2,591**	16	12
		560–620	Option 2	TL	385	480	1,253	572	667	**2,575**	**2,620**		
		700–775	Option 3	TL	315	410	1,323	503	598	**2,617**	**2,656**		
Euro	1,200 x 800	420–465	Option 1	TL	452	547	1,186	639	734	**2,694**	**2,706**	26	21
		560–620	Option 2	TL	385	480	1,253	572	667	**2,753**	**2,764**		
		700–775	Option 3	TL	315	410	1,323	503	598	**2,816**	**2,825**		
BSI	1,000 x 1,200	420–465	Option 1	TL	452	547	1,186	639	734	**2,658**	**2,692**	20	16
		560–620	Option 2	TL	385	480	1,253	572	667	**2,705**	**2,734**		
		700–775	Option 3	TL	315	410	1,323	503	598	**2,756**	**2,781**		
BSI	1,200 x 1,000	420–465	Option 1	TL	452	547	1,186	639	734	**2,745**	**2,763**	24	20
		560–620	Option 2	TL	385	480	1,253	572	667	**2,802**	**2,817**		
		700–775	Option 3	TL	315	410	1,323	503	598	**2,861**	**2,875**		
Australian	1,165 x 1,165	420–465	Option 1	TL	452	547	1,186	639	734	**2,766**	**2,790**	23	19
		560–620	Option 2	TL	385	480	1,253	572	667	**2,819**	**2,840**		
		700–775	Option 3	TL	315	410	1,323	503	598	**2,875**	**2,894**		
Asian	1,200 x 1,200	420–465	Option 1	TL	452	547	1,186	639	734	**2,804**	**2,827**	23	19
		560–620	Option 2	TL	385	480	1,253	572	667	**2,857**	**2,878**		
		700–775	Option 3	TL	315	410	1,323	503	598	**2,914**	**2,932**		
GMA 40” x 48”	1,219 x 1,016	420–465	Option 1	TL	452	547	1,186	639	734	**2,765**	**2,783**	24	20
		560–620	Option 2	TL	385	480	1,253	572	667	**2,822**	**2,837**		
		700–775	Option 3	TL	315	410	1,323	503	598	**2,882**	**2,895**		

Table 8 Aisle width **ESR 1245 / ESR 1265 Tilting carriage**

Pallet size		ESR 1245 / 1265		1.8a			4.20			4.28			4.34		
		Truck configuration		**Load distance**			**Head length**			**Reach**			**Aisle width**		
Pallet	Length x width	Capacity	Battery size DIN 43531C	X1			L2			L4			AST3*		
				1.4	1.6	2.0	1.4	1.6	2.0	1.4	1.6	2.0	1.4	1.6	2.0
	mm	Ah		mm	mm	mm	mm	mm	mm	mm	mm	mm	mm	mm	mm
Euro	800 x 1,200	420–465	Option 1	357	445	-	1,281	1,288	-	544	662	-	2,591	2,631	-
		560–620	Option 2	300	388	388	1,338	1,345	1,345	487	605	605	2,626	2,662	2,662
		700–775	Option 3	228	316	316	1,410	1,417	1,417	415	533	533	2,674	2,705	2,705
		840–930	Option 4	-	244	244	-	1,489	1,489	-	461	461	-	2,752	2,752
Euro	1,200 x 800	420–465	Option 1	357	445	-	1,281	1,288	-	544	662	-	2,778	2,788	-
		560–620	Option 2	300	388	388	1,338	1,345	1,345	487	605	605	2,830	2,839	2,839
		700–775	Option 3	228	316	316	1,410	1,417	1,417	415	533	533	2,896	2,904	2,904
		840–930	Option 4	-	244	244	-	1,489	1,489	-	461	461	-	2,970	2,970
BSI	1,000 x 1,200	420–465	Option 1	357	445	-	1,281	1,288	-	544	662	-	2,724	2,751	-
		560–620	Option 2	300	388	388	1,338	1,345	1,345	487	605	605	2,767	2,791	2,791
		700–775	Option 3	228	316	316	1,410	1,417	1,417	415	533	533	2,823	2,844	2,844
		840–930	Option 4	-	244	244	-	1,489	1,489	-	461	461	-	2,899	2,899
BSI	1,200 x 1,000	420–465	Option 1	357	445	-	1,281	1,288	-	544	662	-	2,825	2,840	-
		560–620	Option 2	300	388	388	1,338	1,345	1,345	487	605	605	2,875	2,888	2,888
		700–775	Option 3	228	316	316	1,410	1,417	1,417	415	533	533	2,938	2,950	2,950
		840–930	Option 4	-	244	244	-	1,489	1,489	-	461	461	-	3,013	3,013
Australian	1,165 x 1,165	420–465	Option 1	357	445	-	1,281	1,288	-	544	662	-	2,841	2,860	-
		560–620	Option 2	300	388	388	1,338	1,345	1,345	487	605	605	2,888	2,905	2,905
		700–775	Option 3	228	316	316	1,410	1,417	1,417	415	533	533	2,948	2,964	2,964
		840–930	Option 4	-	244	244	-	1,489	1,489	-	461	461	-	3,024	3,024
Asian	1,200 x 1,200	420–465	Option 1	357	445	-	1,281	1,288	-	544	662	-	2,880	2,898	-
		560–620	Option 2	300	388	388	1,338	1,345	1,345	487	605	605	2,927	2,944	2,944
		700–775	Option 3	228	316	316	1,410	1,417	1,417	415	533	533	2,927	3,002	3,002
		840–930	Option 4	-	244	244	-	1,489	1,489	-	461	461	-	3,063	3,063
GMA 40” x 48”	1,219 x 1,016	420–465	Option 1	357	445	-	1,281	1,288	-	544	662	-	2,845	2,860	-
		560–620	Option 2	300	388	388	1,338	1,345	1,345	487	605	605	2,895	2,908	2,908
		700–775	Option 3	228	316	316	1,410	1,417	1,417	415	533	533	2,959	2,970	2,970
		840–930	Option 4	-	244	244	-	1,489	1,489	-	461	461	-	3,033	3,033

* Cold store cabin: add 100 mm

Standard ● / Optional ❍	ESR 1225	ESR 1245	ESR 1265
Truck features			
1,120 mm overall width	●		
1,285 mm overall width		●	●
1,425 mm overall width		⑦	❍
1,575 mm overall width		⑦	❍
1,400 kg truck capacity at 600 mm load centre	●	●	●
1,600 kg truck capacity at 600 mm load centre	●	●	●
2,000 kg truck capacity at 600 mm load centre		●	●
Mast			
Heavy duty mast with tilting fork carriage	❍	❍	❍
Super duty mast with tilting fork carriage		❍	❍
Super duty+ mast with tilting fork carriage		❍	❍
Battery compartment			
48 V 280–310 Ah	①		
48 V 420–465 Ah	❍	②	②
48 V 560–620 Ah	❍	❍	❍
48 V 700–775 Ah	③	❍	❍
48 V 840–930 Ah		④	④
Battery rollers for horizontal extraction	❍	❍	❍
DIN 160 Rema connector	●	●	●
SBE 160 connector blue	❍	❍	❍
SB 350 connector blue	❍	❍	❍
Lithium-ion ready	❍	❍	❍
Controls and instruments			
Gena operating system control	●	●	●
7” colour touch screen display with navigation keypad	●	●	●
Display control via C-Drive	❍	❍	❍
Keyless start-up with PIN code	●	●	❍
Keyless start-up with card reader (HID)	❍	❍	●
Key switch	❍	❍	❍
Travel/steer direction indicator	●	●	●
Real-time clock and date	●	●	●
Battery discharge indicator with lift lockout	●	●	●
Hour meters for various system functions	●	●	●
Fingertip hydraulic controls	●	●	●
Dual-lever hydraulic controls	❍	❍	❍
Multi-task hydraulic controls	❍	❍	❍
Driving features			
Speed reduction in turns	●	●	●
e-GEN braking system	●	●	●
OnTrac anti-slip traction control	●	●	●
Load wheel brake system	⑤	⑤	●
ProximityAssist system (head length increased by 74 mm)	N/A	❍	❍
Ramp hold automatic braking for slopes + push-back rack	●	●	●
Electro-mechanical parking brake	●	●	●
Selectable performance levels (F1, F2, P1, P2, P3)	●	●	●
360 Select steering system + indicator	●	●	●
Lifting features			
Offset mast design	●	●	●
Tilting duplex mast (TL)	❍	❍	
Tilting triplex mast (TT)	❍	❍	
Integrated sideshift for tilting masts	❍	❍	
Triplex mast (TT) with tilting fork carriage and sideshift	❍	❍	●
Xpress Lower faster mast lowering speed incl. regenerative lower			❍
Tilt and sideshift single activation	⑥	⑥	
Tilt Position Assist (TPA)	⑦	⑦	❍
Lift height indicator	⑦	⑦	❍
Load weight indicator	❍	❍	❍
Free-lift indicator	●	●	●
Auto Height Select (AHS)	⑦	⑦	❍
Capacity Data Monitor (CDM)	⑦	⑦	❍
Sideshift Position Assist (SPA)	⑦	⑦	❍
Lift speed reduction before maximum height	●	●	●
Travel speed reduction above 1,000 mm lift height	❍	❍	❍
Travel speed reduction above free-lift (6 km/h)	●	●	●
Travel speed reduction above free-lift (3 km/h)	❍	❍	❍
No load on outrigger function + override switch	⑧	⑧	⑧
Retract limit and override switch	⑦	⑦	❍
Five raise cutouts with override switch incl. zone select	⑦	⑦	❍
Colour camera system (fork or mast mounted)	⑨	⑨	⑨
ISO class 2A fork carriage	●	●	●
Fork tip indicators	●	●	●
Load backrest	❍	❍	●

Standard ● / Optional ❍	ESR 1225	ESR 1245	ESR 1265
Hydraulic features			
4th hydraulic function	❍	❍	●
5th hydraulic function	⑦	⑦	❍
6th hydraulic function			⑬
Operator comfort			
Panoramic overhead guard		❍	❍
Plexiglass or mesh overhead guard cover	❍	❍	❍
MSG 65 seat with adjustable lumbar support	❍	❍	●
FlexBack seat backrest (only with MSG 65 seat)		❍	❍
Suspension seat	●	●	
Heated vinyl seat	❍	❍	❍
Heated cloth seat	❍	❍	❍
Air suspension seat (no heated version available)	❍	❍	❍
Headrest	❍	❍	❍
Controls mounted on armrest	●	●	●
Armrest adjustable back + forth	⑩	●	●
Tiltable armrest pad	❍	❍	❍
Adjustable steer column with tools	●	●	
Adjustable steer column without tools	❍	❍	●
Automotive-type accelerator and brake pedals	●	●	●
Multiple storage areas for tools	●	●	●
Low, wide entry step	●	●	●
Desktop with clipboard	❍	❍	●
Adjustable armrest	●	●	
D4 Armrest	⑪	⑪	●
Compartment-mounted armrest	●		
Seat-mounted armrest (only with MSG 65 seat)		●	●
Tiltable display	❍	❍	●
Safety features			
Operator presence pedal	●	⑭	⑭
Seat switch	●	●	●
Power disconnect switch	●	●	●
Safety reminders	●	●	●
Worklights (LED)	❍	❍	❍
Flashing light (LED)	❍	❍	❍
Floor spotlight/linelight (blue or red)	❍	❍	❍
Audible travel alarm	❍	❍	❍
Rear-view mirror	❍	❍	❍
Laser fork guide	❍	❍	❍
Maintenance features			
Event code history	●	●	●
Built-in diagnostic system	●	●	●
InfoPoint maps	●	●	●
Brushless AC motors	●	●	●
Swing-out seat deck for easy access	●	●	●
InfoLink fleet management system, integrated	●	●	●
Work Assist accessories			
Clip pad	❍	❍	❍
Scan-gun holder	❍	❍	❍
Adjustable arm for WMS monitor	❍	❍	❍
12, 24 or 48 V power supply	❍	❍	❍
Waste bin (not available with Li-Ion)		⑦	❍
Cup holder	❍	❍	❍
Storage pocket	❍	❍	❍
USB port	❍	❍	❍
Special applications			
Drive-in rack overhead guard	❍	❍	❍
Aisle guide rollers	❍	❍	❍
Cold storage conditioning to -30°C	❍	❍	❍
Cold store cabin with environmental control		❍	❍
Narrow outriggers (1,070 mm inside)		⑫	⑫
Load wheel protection		❍	❍

① Available on ESR 1225-1.4
② Not with cold store cabin
③ Available on ESR 1225-1.6
④ 1,600 and 2,000 kg only
⑤ Depending on mast, capacity and travel speed
⑥ For tilting mast
⑦ Not applicable for tilting mast
⑧ Stops forks above outriggers if mast is retracted
⑨ Camera system not for tilting mast / mast camera only >= 6,100 mm
⑩ ESR 1225 armrest fixed
⑪ Mandatory for AHS, 5th hydraulic function, override button
⑫ All 1,400/1,600 kg lift heights incl. SD mast, not with 420–465 Ah battery
⑬ Not available with Xpress Lower
⑭ Optional for cold store cabin

Operator compartment and controls
A comfortable low, wide step speeds entry. Non-slip floor mat ensures smooth and safe entry/exit. Once seated, the operator position can be adjusted to suit small and large operators.

A 17.8 cm (7”) colour touch screen delivers real-time information on the truck’s operating status. Thirteen selectable widgets allow the operator to customise the display.

The direction switch, accessory controls, Auto Height Select and all hydraulic functions are at the operator’s fingertip. Operators can manoeuvre the truck while blending lift and attachment functions to increase productivity.

The ergonomic armrest is wide and soft with fore and aft adjustment. There are five easily accessible storage compartments and an optional on-board USB port for charging mobile devices.

Gena operating system
Crown’s next-generation truck operating system with integrated InfoLink provides optimum performance and makes vital information easy to see, understand and use for operators and technicians. It is an enhanced real-time truck management experience that gives you data-rich user experience and provides unmatched truck control for all primary truck systems:

- Traction motor control
- Hydraulic valve and motor control
- Steer & brake motor control
- Programmable performance profiles
- Personalised information/advanced diagnostic display/operator messaging
- Safety checklists and Dynamic Coaching

The Gena user experience is designed to let operators easily adapt the display for the specific task at hand. Screens also offer context-sensitive help including alerts, automated assistance, dynamic data and coaching.

The Crown display is used for easy troubleshooting, accessing service history and setting performance features. No handset or laptop required — all functions are on-board and easy to use.

Productivity features
Speed up your productivity with the optional Xpress Lower and super duty mast. This exclusive technology lets you double lowering speeds, resulting in substantial savings in time and money.

Auto Height Select with one-touch control provides precise load stop at programmed rack heights. Tilt Position Assist with mast deflection compensation ensures the forks are level to the ground, regardless of load weight. Capacity Data Monitor provides visual indication and warning when limits are reached. Mast retract function speed adjusts depending on lift height and load, for more confident handling.

Traction control
OnTrac anti-slip traction control monitors truck dynamics, optimises tractive effort, reduces spinning during acceleration, prevents lock-up during braking, and can extend tyre life. It increases traction performance in wet, dusty or cold storage conditions.

Travel
Crown’s AC traction system is a closed-loop traction control system that maintains top speed throughout the battery charge. Engineered and manufactured by Crown, the AC motor, controller and drive unit are designed specifically for lift truck applications.

Crown’s intelligent speed reduction in turns recognises whether the operator is driving into or out of a curve, with the system analysing steer tyre angle, driving direction and steering direction. It then automatically adjusts speed and acceleration for maximum safe performance. Ramp hold is an automatic braking function for slopes and push-back racks.

Hydraulic system
The control system for the hydraulic motor and proportional valves facilitates precise and sensitive execution of all hydraulic functions. All hydraulic parameters such as lift, lower, tilt, sideshift and reach speeds are fully adjustable and can therefore be adapted to different applications.

Moving mast
Crown’s unique offset, wide view mast delivers excellent visibility at height as well as for low-level operations. Mast cross-bracing and overhead guard bracing have been angled, and hose and chain rollers have been canted to further enhance visibility.

The ESR 1225 and ESR 1245 feature a range of duplex and triplex masts with limited or full free-lift. Tilting masts can compensate for uneven floors, common in wet and outdoor applications.

The ESR 1245 and ESR 1265 feature heavy and super duty triplex masts with full free-lift, integrated sideshift and tilting fork carriage. Mast channels are reinforced to minimise static and dynamic deflection when storing heavy loads at tall lift heights.

Drive unit
A highly efficient drive unit with Rheintacho tachometer, helical gear, integrated pinion and vertically mounted 3-phase (AC) noise-reduced traction motor provides silent, powerful traction performance. The large Vulkollan drive wheel offers high truck capacity, long life and excellent travel comfort.

Steering
360 Select control system allows the operator to choose between 180° and 360° steer tyre rotation to match driving conditions, experience level or personal preference. The system can be locked in either mode with password-protected access.

Braking
A disc brake on the motor armature shaft combined with motor regenerative e-GEN braking provides sure braking with fewer parts and maintenance requirements.

A foot pedal applies the service brake. The truck can also be brought to a stop by reversing the travel direction using the electric regenerative plugging function.

The parking brake is activated automatically when the truck comes to a stop. Once the operator has the feet on both pedals and selected the travel direction, the parking brake will automatically be released.

Motors
The Crown manufactured 3-phase (AC) motors deliver high torque and seamless reversal. Traction and hydraulic motors are oversized for superior thermal capability and are especially suitable for high lift heights, high loads and high ambient temperature applications.

Safety regulations
Conforms to European safety standards. Dimensions and performance data given may vary due to manufacturing tolerances. Performance is based on an average size vehicle and is affected by weight, condition of the truck, how it is equipped and the conditions of the on-site operating area. Crown products and specifications are subject to change without notice.

Data communication
The truck is fitted with a wireless data communications system that electronically collects truck and usage data (in particular hours of operation, battery charge level, status of certain parts that are subject to wear and tear, impacts, etc.) and automatically transmits such data to Crown for service and maintenance purposes as well as for statistical analysis. Dealers have to inform their customers respectively.

ISO 9001 Quality management system certified for the design, development, manufacture, sale and product support of industrial trucks.

European manufacturing:
Crown Gabelstapler GmbH & Co. KG

Продавец:
kupit-shtabeler.ru
+7 495 159-44-32
zakaz@kupit-shtabeler.ru