CROWN

DS 3200 SERIES

Specifications

Double Stacker

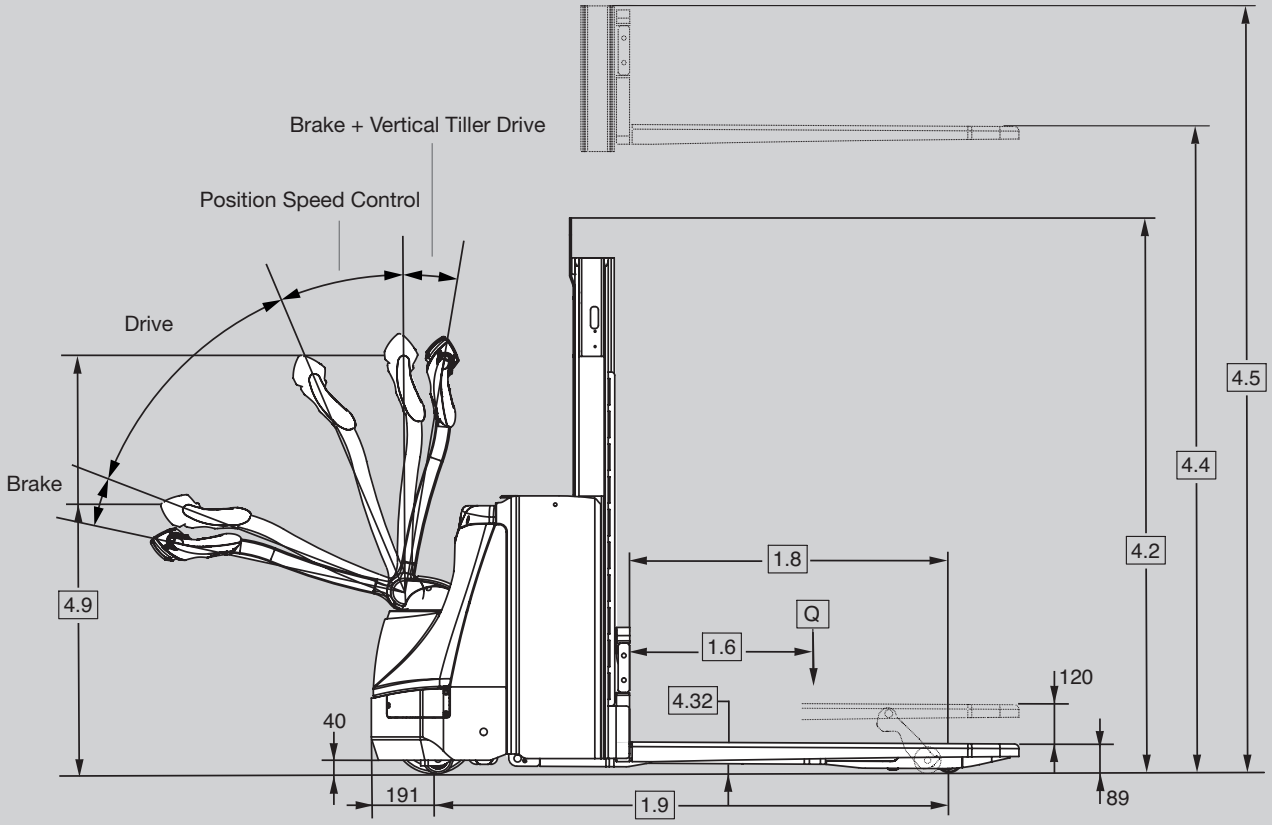
Brake + Vertical Tiller Drive
Position Speed Control
Drive
Brake
4.9
40
191
1.9
1.8
1.6
Q
4.32
120
89
4.2
4.4
4.5

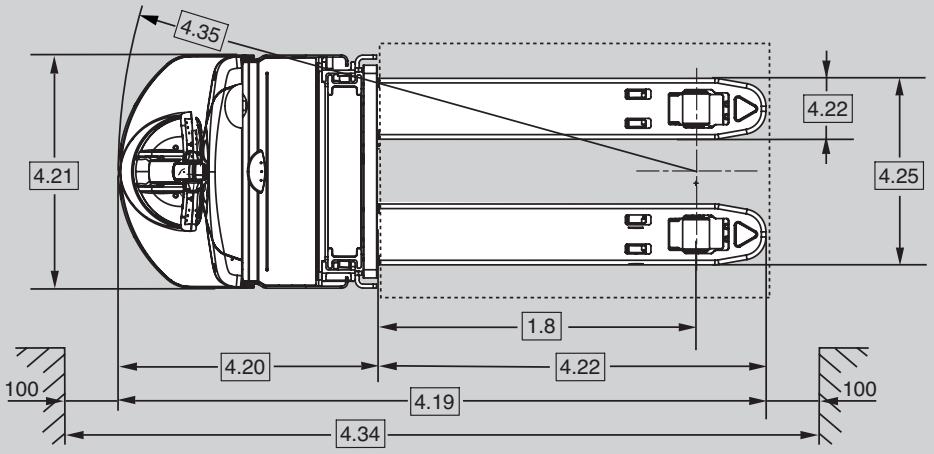
4.35
4.21
4.22
4.25
1.8
4.20
4.22
100
4.19
100
4.34

Destinguishing Mark	1.1	**Manufacturer**	Crown Equipment Corporation			
	1.2	**Model**				**DS 3240-2.0**
			platform type			without platform
			steering type			mechanical
	1.3	**Power Source**				electric
	1.4	**Operator Type**				pedestrian
	1.5	**Rated Capacity ***		Q	t	2.0
	1.6	**Load Center**		c	mm	600
	1.8	**Load Distance**	initial lift raised / lowered	x	mm	904 / 976
	1.9	**Wheelbase**	initial lift raised / lowered	y	mm	1501 / 1573
Tyres/Wheels/Chassis	3.1	**Tyres**				Vulkollan
	3.2	**Tyres Size**	front		mm	Ø 250 x 85
	3.3	**Tyres Size**	rear		mm	Ø 82 x 100
	3.4	**Additional Wheels**	castor wheel		mm	Ø 90 x 50
	3.5	**Wheels**	number front/rear (x=driven wheels)			1x + 2/2
	3.6	**Tread**	front	b_{10}	mm	478
	3.7	**Tread**	rear	b_{11}	mm	374
Dimensions	4.6	**Initial Lift**	collapsed height	h_5	mm	120
	4.9	**Height Control Handle**	in driving position min./max.	h_{14}	mm	780 / 1197
	4.10	**Outrigger**		h_8	mm	83
	4.15	**Fork Height**	lowered	h_{13}	mm	89
	4.19	**Overall Length**	initial lift raised / lowered	l_1	mm	1979 / 1995
	4.20	**Head Length**	initial lift raised / lowered	l_2	mm	772 / 789
	4.21	**Overall Width**		b_1	mm	712
	4.22	**Fork Dimensions**	DIN ISO 2331	s/e/l	mm	60 x 186 x 1190
	4.24	**Fork Carriage Width**	optional length	b_3	mm	650
	4.25	**Fork Spread**		b_5	mm	560 / 570
	4.31	**Ground Clearance**	with Load below Mast	m_1	mm	18
	4.32	**Ground Clearance**	Centre Wheelbase	m_2	mm	27
	4.34.1	**Aisle Width**	for Pallets 1000 × 1200 crossways	A_{st}	mm	2568
	4.34.2	**Aisle Width**	for Pallets 800 × 1200 lengthways	A_{st}	mm	2401
	4.35	**Turning Radius**	initial lift raised / lowered	Wa	mm	1703 / 1765
Performance Data	5.1	**Travel Speed**	with / without Load		km/h	5.9 / 6.0
	5.1.1	**Travel Speed Backwards**	with / without Load		km/h	5.9 / 6.0
	5.2	**Lift Speed**	with / without Load		m/s	0.13 / 0.23
	5.3	**Lowering Speed**	with / without Load		m/s	0.19 / 0.21
	5.7	**Gradeability**	with / without Load		%	10 / 25
	5.8	**Max. Gradeability**	with / without Load, 5 min. rating		%	10 / 25
	5.10	**Service Brake**				electric
Electric Motor	6.1	**Traction Motor**	rating at S2 60 min. / H-class		kW	1.5
	6.2	**Pump Motor**	rating at S3 15%		kW	1.3
	6.3	**Battery**	according to DIN 43531/35/36 A, B, C, no			B
		Max. Battery Box Size		lxwxh	mm	212 x 624 x 627
	6.4	**Battery Voltage**	nominal capacity 5h rating		V/Ah	24 / 250
	6.5	**Battery Weight**			kg	212 - 230
	8.1	**Drive Unit**	drive			AC-transistor
	10.7	**Sound Pressure Level**	at the operator's seat		dB(A)	69

* as double stacker 1000 kg + 1000 kg, as pallet truck 2000 kg and as stacker 1000 kg

Mast

	1.2	**Model**				**DS 3240-2.0**	
		Mast Type				TL	
Weight	2.1	**Service Weight**	less battery		kg	740	
	2.2	**Axle Load**	with Load	front	kg	1075	
				rear	kg	1880	
	2.3	**Axle Load**	without Load	front	kg	710	
				rear	kg	245	
Dimensions	4.2	**Mast**	collapsed height	h_1	mm	1598	1698
	4.3	**Free-lift**		h_2	mm	240	
	4.4	**Lift Height**		h_3	mm	**2100**	**2300**
	4.5	**Mast**	extended height	h_4	mm	2497	2697

Electric System / Batteries
24-volt electrical system with nominal battery capacities up to 250 Ah.

Standard Equipment
1. Maintenance free 3-phase (AC) traction
2. e-GEN® Braking System offers regenerative and frictionless electric braking. Mechanical braking applies only as parking brake
3. The X10® Control Handle places all truck functions at the operator's fingertips
4. Vulkollan drive tyre, castor wheels and load wheels
5. Single load wheels
6. Ramp hold
7. Battery connector - SBE 160 red
8. Easily removable steel covers
9. Hinged steel top battery cover for easy battery access
10. Rabbit/turtle switch incorporates two levels of programmable travel performance
11. Proportional lifting/lowering
12. Pallet stop at initial lift for quick double stacking
13. Polycarbonate mast guard
14. Battery discharge indicator with lift lockout and integrated hour meter and fault code readout
15. Fork tip indicators
16. Key Switch
17. Position Speed Control
18. Vertical Tiller Drive

Optional Equipment
1. Outrigger lift/lower switches on left and right side of X10® Control Handle
2. Battery connector options
3. Supertrac drive tyre
4. Tandem load wheels
5. InfoLink® Ready
6. Key pad
7. Load backrest
8. Special paint
9. Metal mast grill
10. Fork lift switches on both sides of the mast. Max. lift height 850 mm + 120 mm initial lift. Not in combination with load backrest.
11. Sealed on-board charger 30 A
12. Welded fork marks
13. Lithium-Ion Battery Ready

Electrical
A heavy-duty 24 volt fused electrical system provides optimum travel and lift speed. Virtually maintenance-free AC traction motor provides strong acceleration and control at any speed.

Operator Area and Controls
The X10® Control Handle, designed for simultaneous operation of all functions with one hand, improves side-stance operation for maximum visibility in both driving directions. An ergonomic forward/reverse thumb wheel allows for precise manoeuvring. The hand grips are urethane covered for insulation from cold and vibration with integrated horn buttons for easy activation.

A rabbit/turtle switch incorporates two levels of programmable travel performance so operators can select the setting that matches their experience level or application requirements.

Proportional lift and lowering allows easy and precise positioning of loads. The fast responsiveness and speeds of the lifting and lowering functions are designed to meet the high demanding double stacker applications and all this together at a low noise level.

Position Speed Control
When operating in tight spaces such as retail stores with narrow aisles or inside lorries and elevators, the operator can move the tiller from the Travel zone to the Position Speed Control zone. The travel speed in fork direction will then be automatically reduced to 1.5 km/h without the need to come to a halt and a further command from the operator. This ensures a smooth and productive workflow while avoiding unintentional interruptions.

Vertical Tiller Drive
The Vertical Tiller Drive function goes one step beyond. When activated, the truck can be moved at up to 1.5 km/h even when the tiller is in vertical position by simply keeping the travel switch pressed in the desired direction. Reducing the turning radius of the truck, the system enables operators to easily move pallets. This also helps to avoid costly goods damage.

e-GEN® Braking System
The power of the high-torque AC traction motor is used to stop the truck and keep it static until a travel input is requested, even when operating on a gradient. This system eliminates adjustments and wear points for a lifetime of maintenance free use.

An automatic parking brake activates if the truck is stopped and the operator leaves the platform or power is disconnected.

Safety Regulations
Conforms to European safety standards.
Dimensions and performance data given may vary due to manufacturing tolerances. Performance is based on an average size vehicle and is affected by weight, condition of truck, how it is equipped and the conditions of the operating area. Crown products and specifications are subject to change without notice.

DS 3200 SPEC GB 06/22, 10
M03387-006-02
Printed in Germany

ISO 9001 Quality Management System certified for the design, development, manufacture, sale and product support of industrial trucks.

European Manufacturing:
Crown Gabelstapler GmbH & Co. KG

Продавец:
kupit-shtabeler.ru
+7 495 159-44-32
zakaz@kupit-shtabeler.ru