C-D

2,000 - 3,500 kg Capacity

Specifications

Diesel Counterbalance Lift Truck

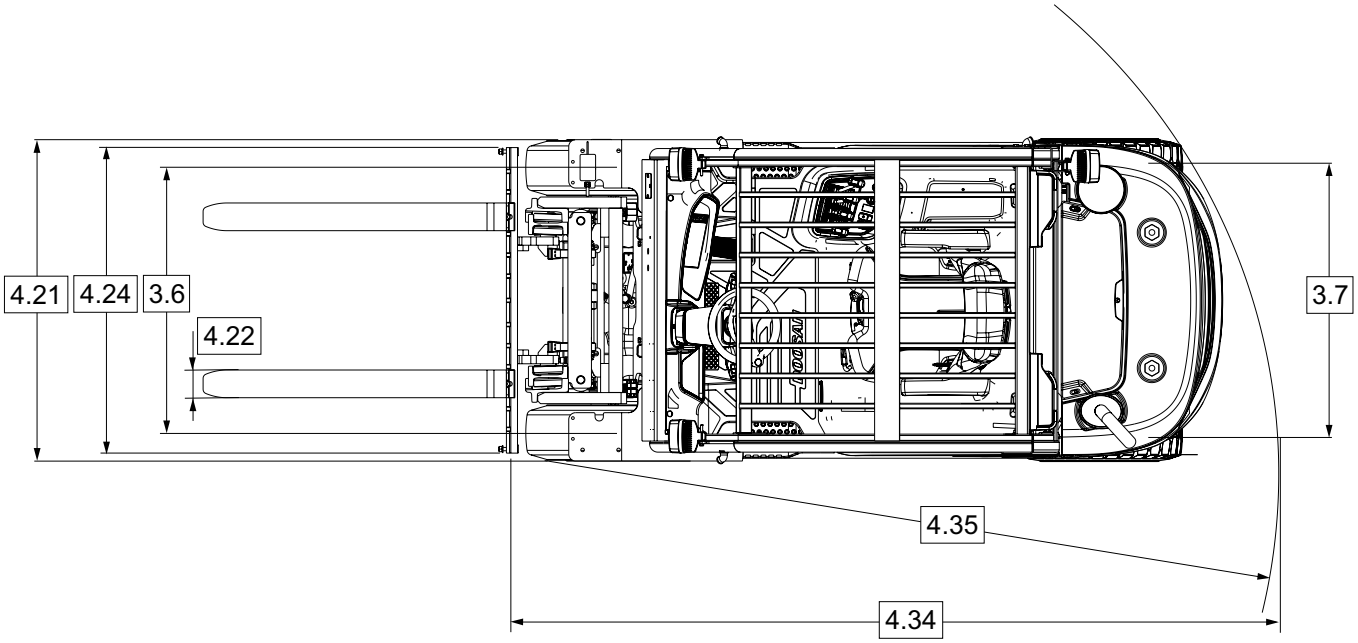
4.21
4.24
3.6
4.22
3.7
4.35
4.34

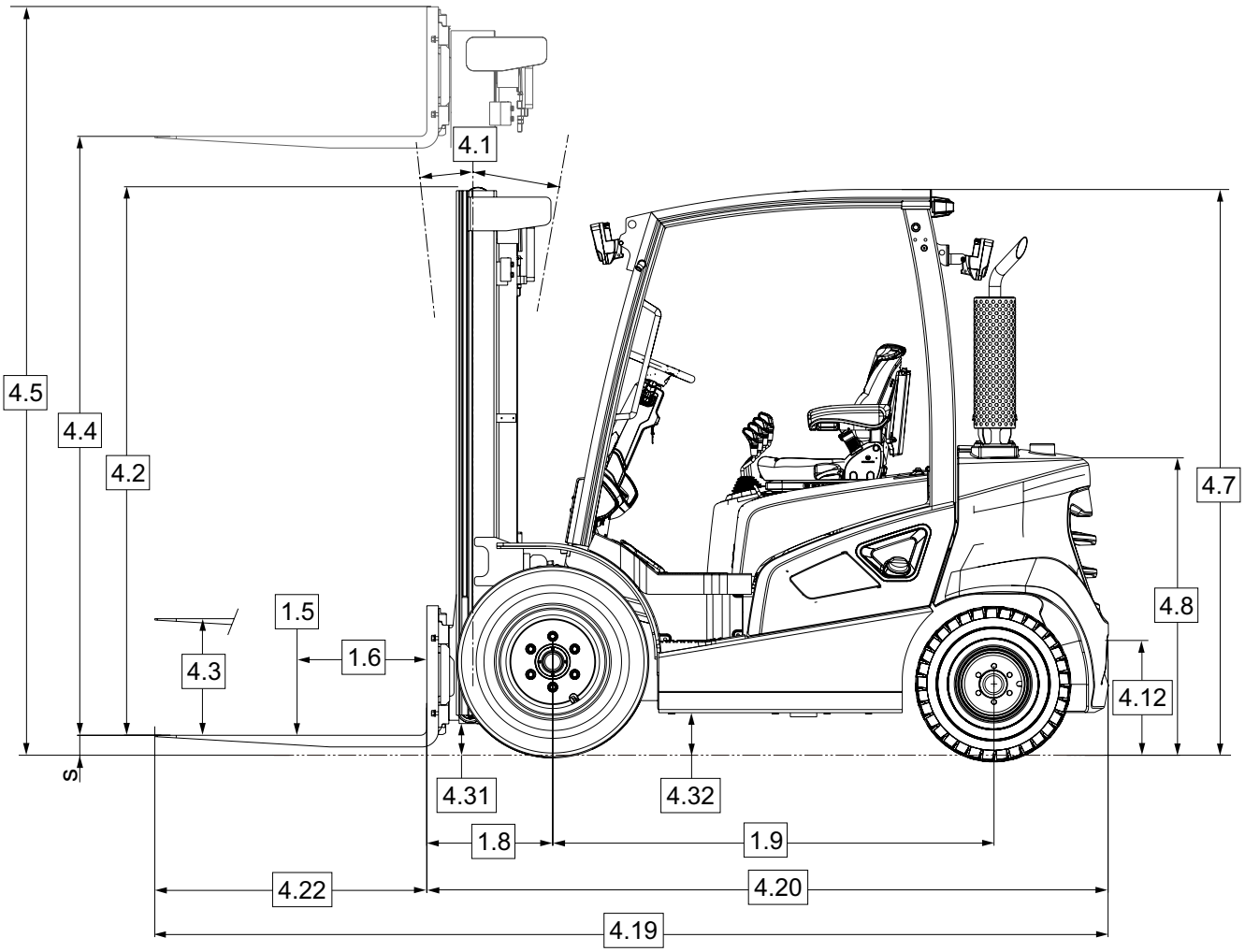
4.1
4.5
4.4
4.2
4.7
4.8
4.12
1.5
1.6
4.3
S
4.31
4.32
1.8
1.9
4.22
4.20
4.19

Distinguishing Mark	1.2	**Model**				**C-D 20 S-9**	**C-D 25 S-9**	**C-D 30 S-9**	**C-D 33 S-9**	**C-D 35 C-9**
	1.3	**Power Source**	Electric, Diesel, LPG, Gasoline			Diesel				
	1.4	**Operator Type**				Sit-down Rider Counterbalance				
	1.5	**Rated Capacity**		Q	t	2.0	2.5	3.0	3.25	3.5
	1.6	**Load Centre**		c	mm	500				
	1.8	**Load Distance**	Center of wheel to fork face	x	mm	480		485		495
	1.9	**Wheelbase**		y	mm	1700				
Weight	2.1	**Service Weight**			kg	3830	4030	4530	4615	4720
	2.2	**Axle Load**	With load front / rear		kg	4977/853	5724/806	6518/1012	6892/973	7302/918
	2.3	**Axle Load**	Without load front / rear		kg	1825/2005	1780/2250	1780/2750	1760/2855	1755/2965
Tyres/Wheels/Ch.	3.1	**Tyres**				Pneumatic / Super Elastic				
	3.2	**Tyre Size**	Front, OD x Width x Rim Dia.		mm	7.00X15-12		8.15X15-12		250x15-18
	3.3	**Tyre Size**	Rear, OD x Width x Rim Dia.		mm	6.50X10-10			6.50X10-12	
	3.5	**Wheels**	Number (x=driven) front/rear			2x / 2				
	3.6	**Tread**	Front	b_{10}	mm	975		982		1026
	3.7	**Tread**	Rear	b_{11}	mm	990				
Dimensions	4.1	**Mast Tilt, Fork Carriage**	Forward / backward	α / β	°	see mast chart				
	4.2	**Mast Collapsed Height**		h_1	mm					
	4.3	**Free-lift**		h_2	mm					
	4.4	**Lift Height**		h_3	mm					
	4.5	**Mast Extended Height**		h_4	mm					
	4.7	**Overhead Guard Height**		h_6	mm	2183				
	4.8	**Seat Height**	Relating to SIP/stand height	h_7	mm	1026				
	4.12	**Coupler Height**		h_{10}	mm	405.5				
	4.19	**Overall Length**		l_1	mm	3624	3674	3779	3798	3828
	4.20	**Head Length**	Length to fork face	l_2	mm	2574	2625	2730	2749	2779
	4.21	**Overall Width**		b_1	mm	1170		1197	1197	1255
	4.22	**Fork Dimension**	DIN ISO 2331	s/e/l	mm	40x100x1050		45x125x1050		
	4.23	**Fork Carriage**	ISO 2328, Class/Type A		class	II A	II A	III A	III A	III A
	4.24	**Fork Carriage Width**		b_3	mm	1103		1115		
	4.31	**Ground Clearance**	With load, below mast	m_1	mm	115		105		
	4.32		With load, centre wheelbase	m_2	mm	143				
	4.34.1	**Aisle Width**	For pallets 1000x1200 crossways	A_{st}	mm	3910	3950	4040	4055	4085
	4.34.2		For pallets 800x1200 lengthways	A_{st}	mm	4110	4150	4240	4255	4285
	4.35	**Turning Radius**		W_a	mm	2230	2270	2355	2370	2390
	4.36	**Internal Turning Radius**		b_{13}	mm	640		641.5		652.5
Performance Data	5.1	**Travel Speed**	With load / without load		km/h	20/21		19/20		20/21
	5.2	**Lift Speed**	With load / without load		m/s	0.61/0.65	0.60/0.65	0.59/0.65	0.51/0.56	0.50/0.56
	5.3	**Lowering Speed**	With load / without load		m/s	0.51/0.45				
	5.5	**Drawbar Pull**	With load / without load (5 min. rating)		N	17780/17500	17770/17640	18470/18080	18360/18100	17380/17070
	5.6	**Max. Drawbar Pull**	With load / without load (5 min. rating)		N	19860/19400	19900/19600	20830/20170	20720/20200	19510/18940
	5.7	**Gradeability**	With load / without load (5 min. rating)		%	33.6/55.2	28.7/49.3	25.7/44.1	24.1/42.2	22.3/40.4
	5.8	**Max. Gradeability**	With load / without load (5 min. rating)			38.1/63.5	32.5/52.5	29.3/50.5	27.4/48.1	25.2/45.7
	5.10	**Service Brake**	Service brake			Foot / Hydraulic				
			Parking brake			Hand / Mechanical				
Combustion Engine	7.1	**Engine Manufacturer/Type**				DI/DM02VA				
	7.2	**Engine Power according to ISO 1585**			kW	45.6				
	7.3	**Rated Speed**			min-1	2200				
	7.3.1	**Torque at 1/min**			Nm/rpm	300 / 1200-1400				
	7.4	**Number of Cylinders/Displacement**			- / cm^3	4 / 2392				
	7.5	**Fuel Consumption according to DIN EN 16796 (diesel)**			l/h	2.8	3.4	3.8	3.9	4
	7.5.2	**CO2 equivalent as per EN 16796 (diesel)**			kg/h	8.3	8.9	9.5	10.2	10.8
	7.10	**Battery Voltage/Nominal Capacity**			V / Ah	12 / 85				
Add. Data	10.1	**Available Working Pressure for Attachments**			bar	156				
	10.2	**Oil Flow for Attachments**			l/min	76.5				
	10.4	**Fuel Tank Capacity**			l	58				
	10.7	**Sound Pressure Level at the Operator´s Seat**			dB(A)	75				

Note: Values listed in the specification sheet have been rounded. Performance may vary due to operation conditions and / or forklift configurations.
Products and specifications are subject to change without prior notice.

Mast Chart C-D 20 S-9

Mast Type	Max. Fork Height h_3	Mast Collapsed Height h_1	Mast Extended Height h_4		Mast Free-lift Height h_2		Rated Load Capacities								
							Tilt Angle						Load Capacities		
			With Load Backrest	Without Load Backrest	With Load Backrest	Without Load Backrest	Single Pneumatic		Double Pneumatic		Single Solid		Single Pneumatic	Double Pneumatic	Single Solid
							FWD	BWD	FWD	BWD	FWD	BWD	LC 500 mm	LC 500 mm	LC 500 mm
	mm	mm	mm	mm	mm	mm	deg	deg	deg	deg	deg	deg	kg	kg	kg
TL	2030	1590	3280	2820	147	147	6	10	6	10	6	10	2000	2000	2000
	2950	2050	4200	3740	147	147	6	10	6	10	6	10	2000	2000	2000
	3230	2190	4480	4020	147	147	6	10	6	10	6	10	2000	2000	2000
	3500	2440	4755	4295	147	147	6	10	6	10	6	10	2000	2000	2000
	3800	2590	5055	4595	147	147	6	10	6	10	6	10	2000	2000	2000
	3950	2665	5205	4745	147	147	6	10	6	10	6	10	2000	2000	2000
	4350	2865	5605	5145	147	147	6	10	6	10	6	10	2000	2000	2000
	4500	2940	5755	5295	147	147	6	10	6	10	6	10	2000	2000	2000
	4960	3165	6205	5745	147	147	6	5	6	10	6	10	2000	2000	2000
TF	2950	2050	4200	3670	845	1375	6	10	6	10	6	10	2000	2000	2000
	3230	2190	4480	3950	985	1515	6	10	6	10	6	10	2000	2000	2000
	3600	2440	4855	4325	1235	1765	6	10	6	10	6	10	2000	2000	2000
TT	2950	1600	4210	3680	395	925	6	8	6	8	6	8	2000	2000	2000
	3900	1915	5155	4625	710	1240	6	8	6	8	6	8	2000	2000	2000
	4240	2025	5485	4955	820	1350	6	8	6	8	6	8	2000	2000	2000
	4290	2050	5560	5030	845	1375	6	8	6	8	6	8	2000	2000	2000
	4730	2190	5980	5450	985	1515	6	8	6	8	6	8	2000	2000	2000
	4805	2215	6055	5525	1010	1540	6	8	6	8	6	8	2000	2000	2000
	4930	2290	6180	5650	1085	1615	6	5	6	8	6	8	2000	2000	2000
	5110	2390	6355	5825	1185	1715	6	5	6	8	6	8	2000	2000	2000
	5170	2360	6420	5890	1155	1685	6	5	6	8	6	8	1900	2000	2000
	5560	2540	6805	6275	1335	1865	6	3	6	8	6	8	1750	2000	2000
	6010	2690	7255	6725	1485	2015	6	3	6	8	6	5	1450	1975	2000
	6290	2860	7540	7010	1655	2185	6	3	6	8	6	5	1150	1925	1850
	6500	2930	7750	7220	1725	2255	6	3	6	8	6	3	1000	1950	2000
	6910	3065	8155	7625	1860	2390	6	3	6	8	6	3	825	1875	1600
	7060	3190	8305	7775	1985	2515	6	3	6	5	6	3	800	1850	1500
	7360	3290	8605	8075	2085	2615	6	3	6	5	6	3	650	1775	1275
	7510	3340	8755	8225	2135	2665	6	3	6	5	6	3	600	1650	1200
	7810	3440	9055	8525	2235	2765	6	3	6	3	6	3	500	1750	1025
Quad	6100	2190	7355	6825	985	1515	6	3	6	5	6	5	1275	1550	1600
	6640	2390	7895	7365	1185	1715	6	3	6	5	6	5	925	1475	1525
	7035	2490	8295	7765	1285	1815	6	3	6	5	6	3	725	1400	1475
	7945	2820	9200	8670	1615	2145	6	3	6	5	6	3	450	1275	1050
	8250	2930	9500	8970	1725	2255	6	3	6	5	6	3	400	1100	900

Mast Chart C-D 25 S-9

TL	2030	1590	3280	2820	147	147	6	10	6	10	6	10	2500	2500	2500
	2950	2050	4200	3740	147	147	6	10	6	10	6	10	2500	2500	2500
	3230	2190	4480	4020	147	147	6	10	6	10	6	10	2500	2500	2500
	3500	2440	4755	4295	147	147	6	10	6	10	6	10	2500	2500	2500
	3800	2590	5055	4595	147	147	6	10	6	10	6	10	2500	2500	2500
	3950	2665	5205	4745	147	147	6	10	6	10	6	10	2500	2500	2500
	4350	2865	5605	5145	147	147	6	8	6	10	6	10	2500	2500	2500
	4500	2940	5755	5295	147	147	6	5	6	10	6	10	2500	2500	2500
	4960	3165	6205	5745	147	147	6	5	6	10	6	10	2500	2500	2500
TF	2950	2050	4200	3670	845	1375	6	10	6	10	6	10	2500	2500	2500
	3230	2190	4480	3950	985	1515	6	10	6	10	6	10	2500	2500	2500
	3600	2440	4855	4325	1235	1765	6	10	6	10	6	10	2500	2500	2500
TT	2950	1600	4210	3680	395	925	6	8	6	8	6	8	2500	2500	2500
	3900	1915	5155	4625	710	1240	6	8	6	8	6	8	2500	2500	2500
	4240	2025	5485	4955	820	1350	6	5	6	8	6	8	2500	2500	2500
	4290	2050	5560	5030	845	1375	6	5	6	8	6	8	2500	2500	2500
	4730	2190	5980	5450	985	1515	6	8	6	8	6	8	2500	2500	2500
	4805	2215	6055	5525	1010	1540	6	5	6	8	6	8	2500	2500	2500
	4930	2290	6180	5650	1085	1615	6	5	6	8	6	8	2250	2500	2500
	5110	2390	6355	5825	1185	1715	6	3	6	8	6	8	2150	2475	2500
	5170	2360	6420	5890	1155	1685	6	3	6	8	6	8	2000	2450	2500
	5560	2540	6805	6275	1335	1865	6	3	6	8	6	5	1750	2400	2500
	6010	2690	7255	6725	1485	2015	6	3	6	8	6	3	1300	2300	2425
	6290	2860	7540	7010	1655	2185	6	3	6	8	6	3	1100	2250	2150
	6500	2930	7750	7220	1725	2255	6	3	6	5	6	3	1000	2200	1925
	6910	3065	8155	7625	1860	2390	6	3	6	5	6	3	800	2150	1550
	7060	3190	8305	7775	1985	2515	6	3	6	3	6	3	700	2100	1425
	7360	3290	8605	8075	2085	2615	6	3	6	3	6	3	600	2050	1225
	7510	3340	8755	8225	2135	2665	6	3	6	3	6	3	550	1975	1125
	7810	3440	9055	8525	2235	2765	6	3	6	3	6	3	400	1725	950
Quad	6100	2190	7355	6825	985	1515	6	3	6	5	6	5	1175	2000	2075
	6640	2390	7895	7365	1185	1715	6	3	6	5	6	5	825	1925	1850
	7035	2490	8295	7765	1285	1815	6	3	6	5	6	3	650	1850	1475
	7945	2820	9200	8670	1615	2145	6	3	6	5	6	3	375	1325	925
	8250	2930	9500	8970	1725	2255	6	3	6	3	6	3	300	1450	775

Note: Mast specifications and rated capacities are based on standard chassis equipped with Pneumatic tyre.

Mast Chart C-D 30 S-9

Mast Type	Max. Fork Height h_3	Mast Collapsed Height h_1	Mast Extended Height h_4		Mast Free-lift Height h_2		Rated Load Capacities								
							Tilt Angle						Load Capacities		
							Single Pneumatic		Double Pneumatic		Single Solid		Single Pneumatic	Double Pneumatic	Single Solid
			With Load Backrest	Without Load Backrest	With Load Backrest	Without Load Backrest	FWD	BWD	FWD	BWD	FWD	BWD	LC 500 mm	LC 500 mm	LC 500 mm
	mm	mm	mm	mm	mm	mm	deg	deg	deg	deg	deg	deg	kg	kg	kg
TL	2030	1580	3280	2870	152	152	6	10	6	10	6	10	3000	3000	3000
	2950	2040	4200	3790	152	152	6	10	6	10	6	10	3000	3000	3000
	3230	2180	4480	4070	152	152	6	10	6	10	6	10	3000	3000	3000
	3500	2430	4755	4345	152	152	6	10	6	10	6	10	3000	3000	3000
	3800	2580	5055	4645	152	152	6	10	6	10	6	10	3000	3000	3000
	3950	2655	5205	4795	152	152	6	10	6	10	6	10	3000	3000	3000
	4350	2855	5605	5195	152	152	6	8	6	10	6	10	3000	3000	3000
	4500	2930	5755	5345	152	152	6	5	6	10	6	10	3000	3000	3000
	4960	3155	6205	5795	152	152	6	3	6	10	6	10	2750	3000	3000
TF	2950	2040	4200	3715	840	1325	6	10	6	10	6	10	3000	3000	3000
	3230	2180	4480	3995	980	1465	6	10	6	10	6	10	3000	3000	3000
	3600	2430	4855	4370	1230	1715	6	10	6	10	6	10	3000	3000	3000
TT	2950	1590	4210	3725	390	875	6	8	6	8	6	8	3000	3000	3000
	3900	1905	5155	4670	705	1190	6	8	6	8	6	8	3000	3000	3000
	4240	2015	5485	5000	815	1300	6	8	6	8	6	8	3000	3000	3000
	4290	2040	5560	5075	840	1325	6	8	6	8	6	8	3000	3000	3000
	4730	2180	5980	5495	980	1465	6	3	6	8	6	8	3000	3000	3000
	4805	2205	6055	5570	1005	1490	6	3	6	8	6	8	3000	3000	3000
	4930	2280	6180	5695	1080	1565	6	3	6	8	6	8	2650	3000	3000
	5110	2380	6355	5870	1180	1665	6	3	6	8	6	8	2500	3000	3000
	5170	2350	6420	5935	1150	1635	6	3	6	8	6	8	2300	3000	3000
	5560	2530	6805	6320	1330	1815	6	3	6	8	6	5	2000	2975	3,000
	6010	2680	7255	6770	1480	1965	6	3	6	5	6	3	1500	2850	2950
	6290	2850	7540	7055	1650	2135	6	3	6	5	6	3	1200	2800	2600
	6500	2920	7750	7265	1720	2205	6	3	6	5	6	3	1250	2750	2300
	6910	3055	8155	7670	1855	2340	6	3	6	3	6	3	825	2650	1800
	7060	3180	8305	7820	1980	2465	6	3	6	3	6	3	750	2600	1650
	7360	3280	8605	8120	2080	2565	6	3	6	3	6	3	625	2200	1375
	7510	3330	8755	8270	2130	2615	6	3	6	3	6	3	550	2050	1275
	7810	3430	9055	8570	2230	2715	6	3	6	3	6	3	450	1800	1075

Mast Chart C-D 33 S-9

TL	2030	1580	3280	2870	152	152	6	10	6	10	6	10	3250	3250	3250
	2950	2040	4200	3790	152	152	6	10	6	10	6	10	3250	3250	3250
	3230	2180	4480	4070	152	152	6	10	6	10	6	10	3250	3250	3250
	3500	2430	4755	4345	152	152	6	10	6	10	6	10	3250	3250	3250
	3800	2580	5055	4645	152	152	6	10	6	10	6	10	3250	3250	3250
	3950	2655	5205	4795	152	152	6	10	6	10	6	10	3250	3250	3250
	4350	2855	5605	5195	152	152	6	5	6	10	6	10	3250	3250	3250
	4500	2930	5755	5345	152	152	6	5	6	10	6	10	3100	3250	3250
	4960	3155	6205	5795	152	152	6	3	6	10	6	8	2700	3250	3250
TF	2950	2040	4200	3715	840	1325	6	10	6	10	6	10	3250	3250	3250
	3230	2180	4480	3995	980	1465	6	10	6	10	6	10	3250	3250	3250
	3600	2430	4855	4370	1,230	1715	6	10	6	10	6	10	3250	3250	3250
TT	2950	1590	4210	3725	390	875	6	8	6	8	6	8	3250	3250	3250
	3900	1905	5155	4670	705	1190	6	8	6	8	6	8	3250	3250	3250
	4240	2015	5485	5000	815	1300	6	8	6	8	6	8	3250	3250	3250
	4290	2040	5560	5075	840	1325	6	5	6	8	6	8	3250	3250	3250
	4730	2180	5980	5495	980	1465	6	3	6	8	6	8	3150	3250	3250
	4805	2205	6055	5570	1005	1490	6	3	6	8	6	8	3000	3250	3250
	4930	2280	6180	5695	1080	1565	6	3	6	8	6	8	2600	3250	3250
	5110	2380	6355	5870	1180	1665	6	3	6	8	6	8	2500	3200	3250
	5170	2350	6420	5935	1150	1635	6	3	6	8	6	8	2250	3175	3150
	5560	2530	6805	6320	1330	1815	6	3	6	8	6	5	2000	3075	3200
	6010	2680	7255	6770	1480	1965	6	3	6	5	6	3	1600	2975	3050
	6290	2850	7540	7055	1650	2135	6	3	6	3	6	3	1250	2900	2575
	6500	2920	7750	7265	1720	2205	6	3	6	3	6	3	1200	2850	2250
	6910	3055	8155	7670	1855	2340	6	3	6	3	6	3	900	2750	1750
	7060	3180	8305	7820	1980	2465	6	3	6	3	6	3	850	2550	1600
	7360	3280	8605	8120	2080	2565	6	3	6	3	6	3	650	2200	1350
	7510	3330	8755	8270	2130	2615	6	3	6	3	6	3	600	2050	1225
	7810	3430	9055	8570	2230	2715	6	3	6	3	6	3	550	1750	1025

Note: Mast specifications and rated capacities are based on standard chassis equipped with Pneumatic tyre.

Mast Chart C-D 35 S-9

Mast Type	Max. Fork Height h_3	Mast Collapsed Height h_1	Mast Extended Height h_4		Mast Free-lift Height h_2		Rated Load Capacities								
							Tilt Angle						Load Capacities		
			With Load Backrest	Without Load Backrest	With Load Backrest	Without Load Backrest	Single Pneumatic		Double Pneumatic		Single Solid		Single Pneumatic	Double Pneumatic	Single Solid
							FWD	BWD	FWD	BWD	FWD	BWD	LC 500 mm	LC 500 mm	LC 500 mm
	mm	mm	mm	mm	mm	mm	deg	deg	deg	deg	deg	deg	kg	kg	kg
TL	1800	1580	3050	2770	152	152	6	10	6	10	6	10	3500	3500	3500
	2350	1855	3600	3320	152	152	6	10	6	10	6	10	3500	3500	3500
	2720	2040	3970	3690	152	152	6	10	6	10	6	10	3500	3500	3500
	3000	2180	4250	3970	152	152	6	10	6	10	6	10	3500	3500	3500
	3495	2430	4750	4470	152	152	6	10	6	10	6	10	3500	3500	3500
	3655	2580	4905	4625	152	152	6	10	6	10	6	10	3500	3500	3500
	3805	2655	5055	4775	152	152	6	10	6	10	6	10	3500	3500	3500
	4205	2855	5455	5175	152	152	6	8	6	10	6	10	3500	3425	3500
	4805	3155	6055	5775	152	152	6	3	6	10	6	8	3250	3250	3350
	5300	3555	6555	6275	152	152	6	3	6	10	6	5	2500	3125	3225
TF	2350	1855	3600	3295	655	960	6	10	6	10	6	10	3500	3500	3500
	2720	2040	3970	3665	840	1145	6	10	6	10	6	10	3500	3500	3500
	3000	2180	4250	3945	980	1285	6	10	6	10	6	10	3500	3500	3500
	3495	2430	4745	4440	1230	1535	6	10	6	10	6	10	3500	3500	3500
TT	3555	1905	4805	4500	705	1010	6	8	6	8	6	8	3400	3400	3400
	3960	2040	5210	4905	840	1145	6	8	6	8	6	8	3400	3400	3400
	4380	2180	5630	5325	980	1285	6	5	6	8	6	8	3400	3350	3400
	4580	2280	5830	5525	1080	1385	6	3	6	8	6	8	3350	3275	3400
	4820	2350	6070	5765	1150	1455	6	3	6	8	6	8	3250	3225	3325
	5205	2530	6455	6150	1330	1635	6	3	6	8	6	5	2800	3125	3225
	5655	2680	6905	6600	1480	1785	6	3	6	5	6	3	2200	3000	3125
	6150	2920	7400	7095	1720	2025	6	3	6	3	6	3	1600	2900	2700
	6555	3055	7805	7500	1855	2160	6	3	6	3	6	3	1200	2825	2050
	6900	3245	8150	7845	2045	2350	6	3	6	3	6	3	900	2750	1625

Note: Mast specifications and rated capacities are based on standard chassis equipped with Pneumatic tyre.

Standard Features

1. Euro stage V Engine
2. Indoor and outdoor use
3. Noise level max. 75 dB
4. Connectors are rated IP65
5. LED front lights
6. Two rear view mirrors
7. Electronic parking brake
8. Ground speed control
9. Autoshift control
10. Powershift transmission
11. Oil-cooled disc brakes
12. Heavy-duty radiator
13. Dual element air cleaner
14. Anti-slip step plate
15. Operator design features
    - Clear-view overhead guard and mast design
    - Wide spacious floorboard
    - Excellent visibility
    - Operator Presence Sensor
    - Large entry handle
    - 5" LCD screen
16. Power steering
17. Adjustable and telescopic steer column
18. Pneumatic tyres
19. Manual lever controls
20. USB port & 12 V electrical outlet
21. Emergency stop switch

Optional Equipment

1. TL, TT, TF and Quad mast
2. Various suspension seat options
3. Low overhead guard
4. High overhead guard
5. Drive-in rack overhead guard
6. Additional operator design features
    - Fingertip controls with integrated directional control switch
    - Foot-operated directional control
    - 7" Display
    - Modular cabin versions
    - Air conditioner
    - Radio with MP3 player
    - Cup holder
    - Rear handle
    - Seat belt interlock
7. Lights
    - LED Front worklights with turn signals
    - LED Rear lights with back-up and turn signals
    - LED Rear worklights
8 Audible warning devices
    - Travel alarm
    - Back-up travel alarm
9. Rear view camera for hard cabin
10. Visual warning devices
    - Flashing light
    - Floor spot light (blue or red light)
    - Floor linelight (blue or red)
11. Attachments
    - Hang-on sideshifter
    - Integral sideshifting fork positioner
12. Heavy-duty applications
    - Pre-cleaner
    - Open-core radiator
    - Belly plate
    - Main fuel filter & pre fuel filter
13. Stability System Plus with
    - Steering angle display (the steer wheel angle appears on the display)
    - Travelling speed is decreased (down to 5 km/h) when the mast is raised above primery stage
    - Forward tilt angle is limited to 2° when the mast is raised above primery stage
    - Alarm sounds when the mast is raised above the primery stage and tilted more than 2°
14. Super Elastic tyres
15. Non-marking Super Elastic tyres
16. InfoLink® Ready

Warning Device Notes

Audible or visual alerts

Safety considerations and dangers associated with audible travel alarms and lights include:

- Multiple alarms and/or lights can cause confusion.
- Workers ignore the alarms and/or lights after day-in and day-out exposure.
- Operator may transfer the responsibility for “looking out” to the pedestrians.
- Annoys operators and pedestrians.

Other Options Available

Contact Crown for additional options.

Dimensions and performance data given may vary due to manufacturing tolerances. Performance is based on an average size vehicle and is affected by weight, truck condition, truck equipment and the conditions of the operating area. Crown products and specifications are subject to change without notice.

C-D 20-35 SPEC GB 06/24, 10
M03935-006-02
Printed in Germany

ISO 9001 Quality Management System certified for the design, development, manufacture, sale and product support of industrial trucks.

European Manufacturing:
Crown Gabelstapler GmbH & Co. KG

Продавец:
kupit-shtabeler.ru
+7 495 159-44-32
zakaz@kupit-shtabeler.ru