FC 5700
SERIES

Specifications

Electric Counterbalance
Lift Truck 48 V
(Four-Wheel)

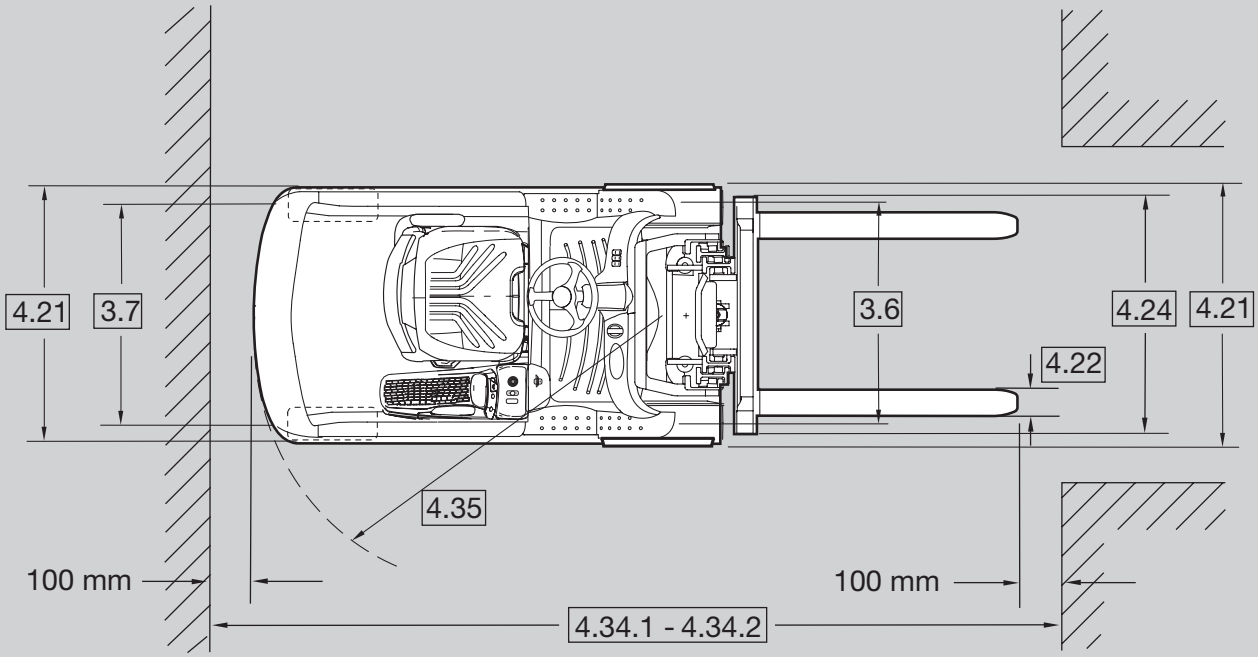
4.21
3.7
3.6
4.24
4.21
4.22
4.35
100 mm
100 mm
4.34.1 - 4.34.2

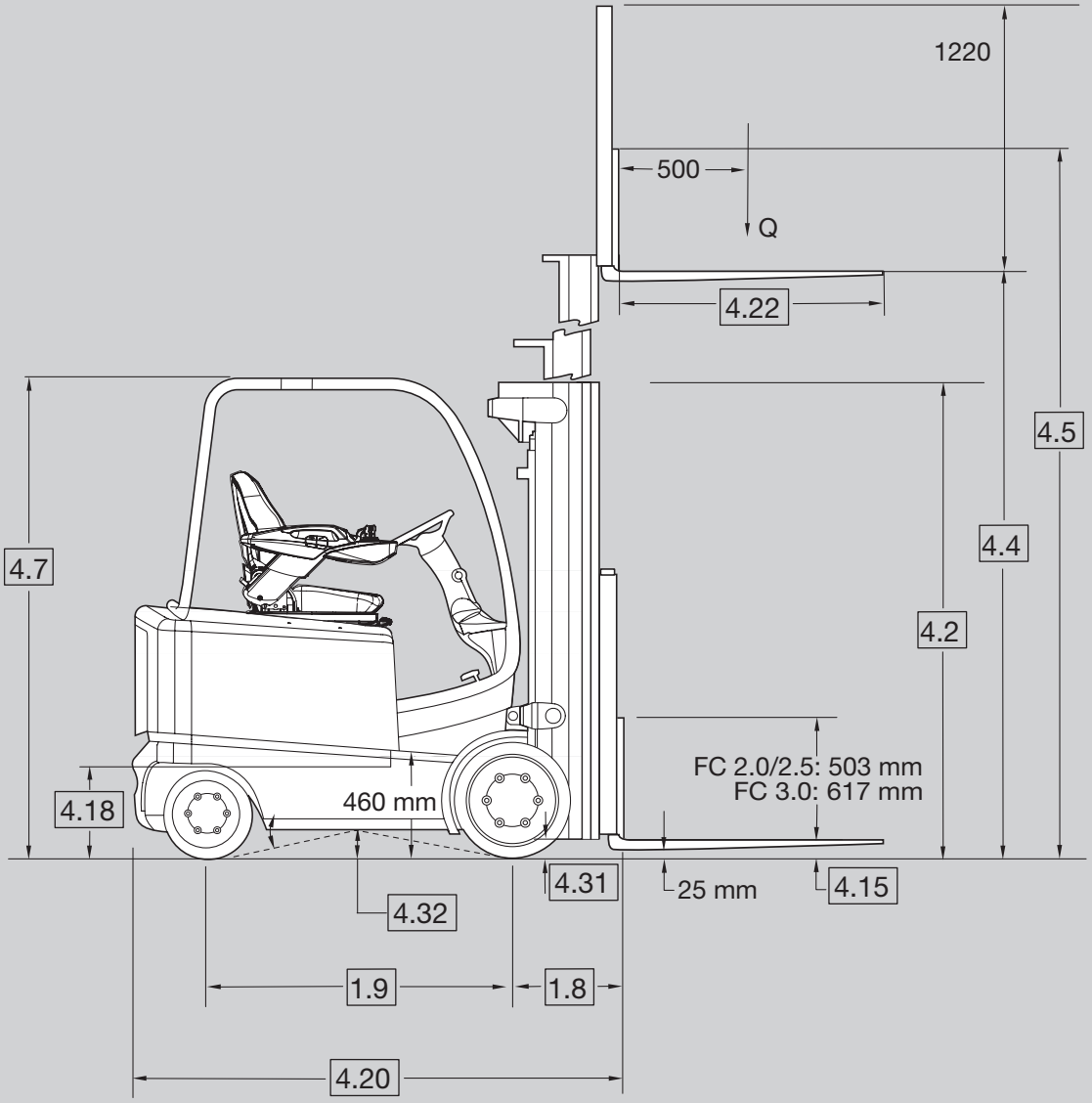
1220
500
Q
4.22
4.5
4.4
4.7
4.2
FC 2.0/2.5: 503 mm
FC 3.0: 617 mm
4.18
460 mm
4.31
25 mm
4.15
4.32
1.9
1.8
4.20

FC 5700 Series Specifications

Distinguishing Mark	1.1	**Manufacturer**				Crown Equipment Corporation	
	1.2	**Model**				FC 5715 - 2.0	FC 5725 - 2.0
	1.3	**Power Source**	Electric		Volt	48	
	1.4	**Operator Type**				sit-down	
	1.5	**Rated Capacity**		Q	t	2.0	
	1.6	**Load Centre**		c	mm	500	
	1.8	**Load Distance**		x	mm	400	
	1.9	**Wheelbase**		y	mm	1260	1390
Weight	2.1	**Service Weight**	Less battery		kg	3282	3266
	2.2	**Axle Load**	With load, front / rear		kg	5461 / 855	5491 / 860
	2.3	**Axle Load**	Without load, front / rear		kg	2170 / 2304	2200 / 2336
Tyres/Wheels/Chassis	3.1	**Tyres**				Cushion	
	3.2	**Tyre Size**	Front		mm	533 x 178 x 381	
	3.3	**Tyre Size**	Rear		mm	406 x 152 x 267	
	3.5	**Wheels**	Number front/rear (x=driven wheels)			2x / 2	
	3.6	**Tread**	Front, standard / optional	b_{10}	mm	937 / 1029	
	3.7	**Tread**	Rear	b_{11}	mm	914	
Dimensions	4.1	**Mast Tilt, Fork Carriage**	Forward/backward	α / β	°	5 / 5	
	4.2	**Mast Collapsed Height**		h_1	mm	see table 1	
	4.3	**Free-lift**		h_2	mm	see table 1	
	4.4	**Lift Height**		h_3	mm	see table 1	
	4.5	**Mast Extended Height**		h_4	mm	see table 1	
	4.7	**Overhead Guard Height**	Standard / optional	h_6	mm	2250 / 2120, 2185, 2300*	
	4.8	**Seat Height relating to SIP/Stand Height**		h_7	mm	1251	
	4.12	**Coupler Height**	.	h_{10}	mm	240	
	4.15	**Fork Height**		h_{13}	mm	70	
	4.18	**Battery Floor Height**	With / without rollers		mm	442 / 434	
	4.20	**Head Length**		l_2	mm	1990	2150
	4.21	**Overall Width**	Standard front / rear	b_1	mm	1115 / 1100	
			Option track enlargement front / rear	b_1	mm	1210 / 1100	
	4.22	**Fork Dimensions**	DIN ISO 2331	s x e	mm	45 x 100	
			Standard / option	l	mm	990 / 800, 915, 1065, 1100, 1145, 1220, 1370, 1525	
	4.23	**Fork Carriage ISO 2328, Class/Type A, B**				2 A	
	4.24	**Fork Carriage Width**	With/without load backrest	b_3	mm	1120 / 965	
	4.31	**Ground Clearance**	With load below mast	m_1	mm	76	
	4.32	**Ground Clearance**	Centre wheelbase	m_2	mm	122	
	4.34.1	**Aisle Width**	For pallets 1000 × 1200 crossways	A_{st}	mm	3311	3451
	4.34.2	**Aisle Width**	For pallets 800 × 1200 lengthways	A_{st}	mm	3491	3631
	4.35	**Turning Radius**		Wa	mm	1690	1830
Performance Data	5.1	**Travel Speed**	With load / without load		km/h	17.7 / 19.7	
	5.2	**Lift Speed**	With load / without load		m/s	0.57 / 0.58	
	5.3	**Lowering Speed**	With load / without load (manual)		m/s	0.46	
	5.3	**Lowering Speed**	With load / without load (EPV)		m/s	0.51	
	5.5	**Drawbar Pull**	With load / without load (60 min. rating)		N	4070 / 4462	3991 / 4384
	5.6	**Max. Drawbar Pull**	With load / without load		N	16089 / 16481	16010 / 16403
	5.7	**Gradeability**	With load / without load (30 min. rating)		%	11.6 / 17.3	10.8 / 15.8
	5.8	**Max. Gradeability**	With load / without load (5 min. rating		%	24.8 / 37.2	23.2 / 33.8
	5.9	**Acceleration Time**	With load / without load (10 m)		s	4.2 / 3.8	
	5.10	**Service Brake**	Service / Park			Foot Motor - Electric Assist / Auto - Electric	
Electric Motor	6.1	**Traction Motor**	Rating at S2 60 min.		kW	2 x 7.9	
	6.2	**Pump Motor**	Rating at S3 15%		kW	11.4	
	6.3	**Max. Battery Box Size**	DIN43531, without rollers	lxwxh	mm	692 x 983 x 565**	837 x 983 x 565**
	6.4	**Battery Voltage**	Nominal capacity 5 h		V / Ah	48 / 630	48 / 840
	6.5	**Battery Weight**	Min./max.		kg	1195 / 1450	1270 / 1815
	10.1	**Available Working Pressure for Attachments**			bar	230	
	10.2	**Oil Volume for Attachments**			l/min	56.8	

* 2300 mm overhead guard height in combination with swivel seat only

** Contact Crown for battery drawings

Distinguishing Mark	1.1	**Manufacturer**				Crown Equipment Corporation		
	1.2	**Model**				FC 5715 - 2.5	FC 5725 - 2.5	FC 5745 - 2.5
	1.3	**Power Source**	Electric		Volt	48		
	1.4	**Operator Type**				sit-down		
	1.5	**Rated Capacity**		Q	t	2.5		
	1.6	**Load Centre**		c	mm	500		
	1.8	**Load Distance**		x	mm	400		
	1.9	**Wheelbase**		y	mm	1260	1390	1390
Weight	2.1	**Service Weight**	Less battery		kg	3666	3570	3445
	2.2	**Axle Load**	With load, front / rear		kg	6239 / 605	6201 / 882	6232 / 887
	2.3	**Axle Load**	Without load, front / rear		kg	2268 / 2596	2259 / 2585	2264 / 2591
Tyres/Wheels/Chassis	3.1	**Tyres**				Cushion		
	3.2	**Tyre Size**	Front		mm	533 x 178 x 381		
	3.3	**Tyre Size**	Rear		mm	406 x 152 x 267		
	3.5	**Wheels**	Number front/rear (x=driven wheels)			2x / 2		
	3.6	**Tread**	Front, standard / optional	b_{10}	mm	937 / 1029		
	3.7	**Tread**	Rear	b_{11}	mm	914		
Dimensions	4.1	**Mast Tilt, Fork Carriage**	Forward/backward	α / β	°	5 / 5		
	4.2	**Mast Collapsed Height**		h_1	mm	see table 1		
	4.3	**Free-lift**		h_2	mm	see table 1		
	4.4	**Lift Height**		h_3	mm	see table 1		
	4.5	**Mast Extended Height**		h_4	mm	see table 1		
	4.7	**Overhead Guard Height**	Standard / optional	h_6	mm	2250 / 2120, 2185, 2300*		
	4.8	**Seat Height relating to SIP/Stand Height**		h_7	mm	1251		
	4.12	**Coupler Height**	.	h_{10}	mm	240		
	4.15	**Fork Height**		h_{13}	mm	70		
	4.18	**Battery Floor Height**	With / without rollers		mm	442 / 434		
	4.20	**Head Length**		l_2	mm	2070	2150	2230
	4.21	**Overall Width**	Standard front / rear	b_1	mm	1115 / 1100		
			Option track enlargement front / rear	b_1	mm	1210 / 1100		
	4.22	**Fork Dimensions**	DIN ISO 2331	s x e	mm	45 x 100		
			Standard / option	l	mm	990 / 800, 915, 1065, 1100, 1145, 1220, 1370, 1525		
	4.23	**Fork Carriage ISO 2328, Class/Type A, B**				2 A		
	4.24	**Fork Carriage Width**	With/without load backrest	b_3	mm	1120 / 965		
	4.31	**Ground Clearance**	With load below mast	m_1	mm	76		
	4.32	**Ground Clearance**	Centre wheelbase	m_2	mm	122		
	4.34.1	**Aisle Width**	For pallets 1000 × 1200 crossways	A_{st}	mm	3381	3451	3527
	4.34.2	**Aisle Width**	For pallets 800 × 1200 lengthways	A_{st}	mm	3561	3631	3706
	4.35	**Turning Radius**		Wa	mm	1760	1830	1905
Performance Data	5.1	**Travel Speed**	With load / without load		km/h	17.7 / 19.7		
	5.2	**Lift Speed**	With load / without load		m/s	0.52 / 0.58		
	5.3	**Lowering Speed**	With load / without load (manual)		m/s	0.46		
	5.3	**Lowering Speed**	With load / without load (EPV)		m/s	0.51		
	5.5	**Drawbar Pull**	With load / without load (60 min. rating)		N	3896 / 4387	3848 / 4339	3847 / 4338
	5.6	**Max. Drawbar Pull**	With load / without load		N	15915 / 16406	15867 / 16358	15866 / 16357
	5.7	**Gradeability**	With load / without load (30 min. rating)		%	10.0 / 15.9	9.6 / 15.0	9.6 / 15.0
	5.8	**Max. Gradeability**	With load / without load (5 min. rating		%	21.6 / 34.0	20.8 / 32.2	20.8 / 32.1
	5.9	**Acceleration Time**	With load / without load (10 m)		s	4.4 / 3.9		
	5.10	**Service Brake**	Service / Park			Foot Motor - Electric Assist / Auto - Electric		
Electric Motor	6.1	**Traction Motor**	Rating at S2 60 min.		kW	2 x 7.9		
	6.2	**Pump Motor**	Rating at S3 15%		kW	11.4		
	6.3	**Max. Battery Box Size**	DIN43531, without rollers	lxwxh	mm	692 x 983 x 565**	837 x 983 x 565**	924x983x565**
	6.4	**Battery Voltage**	Nominal capacity 5 h		V / Ah	48 / 630	48 / 840	48 / 945
	6.5	**Battery Weight**	Min./max.		kg	1195 / 1450	1270 / 1815	1410 / 1930
	10.1	**Available Working Pressure for Attachments**			bar	230		
	10.2	**Oil Volume for Attachments**			l/min	56.8		

* 2300 mm overhead guard height in combination with swivel seat only

** Contact Crown for battery drawings

FC 5700 Series Specifications

Distinguishing Mark	1.1	**Manufacturer**				Crown Equipment Corporation	
	1.2	**Model**				FC 5725 - 3.0	FC 5745 - 3.0
	1.3	**Power Source**	Electric		Volt	48	
	1.4	**Operator Type**				sit-down	
	1.5	**Rated Capacity**		Q	t	3.0	
	1.6	**Load Centre**		c	mm	500	
	1.8	**Load Distance**		x	mm	410	
	1.9	**Wheelbase**		y	mm	1390	
Weight	2.1	**Service Weight**	Less battery		kg	3720	4048
	2.2	**Axle Load**	With load, front / rear		kg	7158 / 977	7269 / 1093
	2.3	**Axle Load**	Without load, front / rear		kg	2443 / 3007	2132 / 3323
Tyres/Wheels/Chassis	3.1	**Tyres**				Cushion	
	3.2	**Tyre Size**	Front		mm	533 x 203 x 381	
	3.3	**Tyre Size**	Rear		mm	406 x 152 x 267	
	3.5	**Wheels**	Number front/rear (x=driven wheels)			2x / 2	
	3.6	**Tread**	Front, standard / optional	b_{10}	mm	965 / 1005	
	3.7	**Tread**	Rear	b_{11}	mm	914	
Dimensions	4.1	**Mast Tilt, Fork Carriage**	Forward/backward	α / β	°	5 / 5	
	4.2	**Mast Collapsed Height**		h_1	mm	see table 2	see table 3
	4.3	**Free-lift**		h_2	mm	see table 2	see table 3
	4.4	**Lift Height**		h_3	mm	see table 2	see table 3
	4.5	**Mast Extended Height**		h_4	mm	see table 2	see table 3
	4.7	**Overhead Guard Height**	Standard / optional	h_6	mm	2250 / 2120, 2185, 2300*	
	4.8	**Seat Height relating to SIP/Stand Height**		h_7	mm	1251	
	4.12	**Coupler Height**	.	h_{10}	mm	240	
	4.15	**Fork Height**		h_{13}	mm	70	
	4.18	**Battery Floor Height**	With / without rollers		mm	442 / 434	
	4.20	**Head Length**		l_2	mm	2235	2315
	4.21	**Overall Width**	Standard front / rear	b_1	mm	1160 / 1100	
			Option track enlargement front / rear	b_1	mm	1220 / 1100	
	4.22	**Fork Dimensions**	DIN ISO 2331	s x e	mm	45 x 127	
			Standard / option	l	mm	990 / 800, 915, 1065, 1100, 1145, 1220, 1370, 1525	
	4.23	**Fork Carriage ISO 2328, Class/Type A, B**				3 A	
	4.24	**Fork Carriage Width**	With/without load backrest	b_3	mm	1120 / 965	
	4.31	**Ground Clearance**	With load below mast	m_1	mm	76	
	4.32	**Ground Clearance**	Centre wheelbase	m_2	mm	122	
	4.34.1	**Aisle Width**	For pallets 1000 × 1200 crossways	A_{st}	mm	3536	3607
	4.34.2	**Aisle Width**	For pallets 800 × 1200 lengthways	A_{st}	mm	3716	3786
	4.35	**Turning Radius**		Wa	mm	1905	1975
Performance Data	5.1	**Travel Speed**	With load / without load		km/h	17.7 / 19.7	
	5.2	**Lift Speed**	With load / without load		m/s	0.47 / 0.58	0.41 / 0.58
	5.3	**Lowering Speed**	With load / without load (manual)		m/s	0.46	
	5.3	**Lowering Speed**	With load / without load (EPV)		m/s	0.51	
	5.5	**Drawbar Pull**	With load / without load (60 min. rating)		N	3665 / 4253	3679 / 4268
	5.6	**Max. Drawbar Pull**	With load / without load		N	15684 / 16272	15698 / 16287
	5.7	**Gradeability**	With load / without load (30 min. rating)		%	8.4 / 13.8	8.5 / 14.0
	5.8	**Max. Gradeability**	With load / without load (5 min. rating		%	18.3 / 29.4	18.5 / 29.8
	5.9	**Acceleration Time**	With load / without load (10 m)		s	4.6 / 4.0	
	5.10	**Service Brake**	Service / Park			Foot Motor - Electric Assist / Auto - Electric	
Electric Motor	6.1	**Traction Motor**	Rating at S2 60 min.		kW	2 x 7.9	
	6.2	**Pump Motor**	Rating at S3 15%		kW	11.4	
	6.3	**Max. Battery Box Size**	DIN43531, without rollers	lxwxh	mm	837 x 983 x 565**	924 x 983 x 565**
	6.4	**Battery Voltage**	Nominal capacity 5 h		V / Ah	48 / 840	48 / 945
	6.5	**Battery Weight**	Min./max.		kg	1270 / 1815	1410 / 1930
	10.1	**Available Working Pressure for Attachments**			bar	230	
	10.2	**Oil Volume for Attachments**			l/min	56.8	

* 2300 mm overhead guard height in combination with swivel seat only

** Contact Crown for battery drawings

Table 1 Mast

FC 57X5 - 2.0 / 2.5					TL Mast							
4.1	**Mast Tilt, Fork Carriage**	Forward/backward	α / β	°	5 / 5						5/3	
4.2	**Mast Collapsed Height**		h_1	mm	**2110**	**2265**	**2415**	**2570**	**2720**	**2875**	**3025**	**3175**
4.3	**Free-lift**	With load backrest	h_2	mm	145						145	
		Without load backrest	h_2		145						145	
4.4	**Lift Height**		h_3	mm	**3200**	**3505**	**3810**	**3935**	**4035**	**4315**	**4645**	**4925**
4.5	**Mast Extended Height**	With load backrest	h_4	mm	4445	4750	5055	5185	5285	5565	5895	6175
		Without load backrest	h_4	mm	3785	4090	4395	4525	4625	4905	5235	5515

FC 57X5 - 2.0 / 2.5					TF Mast							
4.1	**Mast Tilt, Fork Carriage**	Forward/backward	α / β	°	5 / 5							5/3
4.2	**Mast Collapsed Height**		h_1	mm	**1960**	**2110**	**2265**	**2415**	**2570**	**2720**	**2875**	**3025**
4.3	**Free-lift**	With load backrest	h_2	mm	710	860	1015	1165	1320	1470	1625	1775
		Without load backrest	h_2	mm	1395	1545	1700	1850	2005	2155	2310	2460
4.4	**Lift Height**		h_3	mm	**2895**	**3200**	**3505**	**3810**	**4110**	**4415**	**4670**	**4975**
4.5	**Mast Extended Height**	With load backrest	h_4	mm	4145	4445	4750	5055	5360	5665	5920	6225
		Without load backrest	h_4	mm	3430	3735	4040	4345	4650	4955	5185	5490

FC 57X5 - 2.0 / 2.5					TT Mast							
4.1	**Mast Tilt, Fork Carriage**	Forward/backward	α / β	°	5 / 5						5/3	
4.2	**Mast Collapsed Height**		h_1	mm	**2110**	**2265**	**2415**	**2570**	**2720**	**2875**	**3025**	**3175**
4.3	**Free-lift**	With load backrest	h_2	mm	860	1015	1165	1320	1470	1625	1775	1930
		Without load backrest	h_2	mm	1600	1750	1905	2055	2205	2360	2510	2665
4.4	**Lift Height**		h_3	mm	**4775**	**5230**	**5485**	**5865**	**6245**	**6550**	**7010**	**7390**
4.5	**Mast Extended Height**	With load backrest	h_4	mm	6020	6480	6735	7115	7495	7800	8230	8610
		Without load backrest	h_4	mm	5285	5745	5995	6380	6760	7065	7520	7900

FC 57X5 - 2.0 / 2.5					Quad Mast				
4.1	**Mast Tilt, Fork Carriage**	Forward/backward	α / β	°	5 / 3				
4.2	**Mast Collapsed Height**		h_1	mm	**2110**	**2265**	**2415**	**2570**	**2720**
4.3	**Free-lift**	With load backrest	h_2	mm	860	1015	1165	1320	1470
		Without load backrest	h_2	mm	1520	1675	1825	1980	2130
4.4	**Lift Height**		h_3	mm	**6095**	**6550**	**7010**	**7465**	**7920**
4.5	**Mast Extended Height**	With load backrest	h_4	mm	7345	7800	8255	8715	9170
		Without load backrest	h_4	mm	6655	7115	7570	8030	8485

Table 2 Mast

FC 5725 - 3.0					TL Mast					
4.1	**Mast Tilt, Fork Carriage**	Forward/backward	α / β	°	5 / 5					
4.2	**Mast Collapsed Height**		h_1	mm	**2110**	**2265**	**2415**	**2570**	**2720**	**2875**
4.3	**Free-lift**	With load backrest	h_2	mm	145					
		Without load backrest	h_2		145					
4.4	**Lift Height**		h_3	mm	**2995**	**3300**	**3605**	**3810**	**4040**	**4320**
4.5	**Mast Extended Height**	With load backrest	h_4	mm	4245	4550	4855	5055	5285	5565
		Without load backrest	h_4	mm	3685	3990	4295	4500	4725	5005

FC 5725 - 3.0					TF Mast						
4.1	**Mast Tilt, Fork Carriage**	Forward/backward	α / β	°	5 / 5						
4.2	**Mast Collapsed Height**		h_1	mm	**1960**	**2110**	**2265**	**2415**	**2570**	**2720**	**2875**
4.3	**Free-lift**	With load backrest	h_2	mm	710	860	1015	1165	1320	1470	1625
		Without load backrest	h_2		1320	1470	1625	1775	1930	2080	2235
4.4	**Lift Height**		h_3	mm	**2740**	**3045**	**3350**	**3630**	**3935**	**4240**	**4495**
4.5	**Mast Extended Height**	With load backrest	h_4	mm	3990	4295	4600	4880	5185	5490	5715
		Without load backrest	h_4	mm	3380	3685	3990	4270	4575	4880	5135

FC 5725 - 3.0					TT Mast					
4.1	**Mast Tilt, Fork Carriage**	Forward/backward	α / β	°	5 / 5					
4.2	**Mast Collapsed Height**		h_1	mm	**2110**	**2265**	**2415**	**2570**	**2720**	**2875**
4.3	**Free-lift**	With load backrest	h_2	mm	860	1015	1165	1320	1470	1625
		Without load backrest	h_2		1470	1625	1775	1930	2080	2235
4.4	**Lift Height**		h_3	mm	**4570**	**5025**	**5280**	**5665**	**6045**	**6350**
4.5	**Mast Extended Height**	With load backrest	h_4	mm	5820	6275	6530	6910	7290	7595
		Without load backrest	h_4	mm	5210	5665	5920	6300	6685	6985

Table 3 Mast

FC 5745 - 3.0					TL Mast					
4.1	**Mast Tilt, Fork Carriage**	Forward/backward	α / β	°	5 / 5					
4.2	**Mast Collapsed Height**		h_1	mm	**2110**	**2265**	**2415**	**2570**	**2720**	**2875**
4.3	**Free-lift**	With load backrest	h_2	mm	150					
		Without load backrest	h_2		150					
4.4	**Lift Height**		h_3	mm	**2920**	**3200**	**3530**	**3810**	**4025**	**4315**
4.5	**Mast Extended Height**	With load backrest	h_4	mm	4170	4445	4780	5055	5285	5565
		Without load backrest	h_4	mm	3610	3890	4220	4500	4725	5005

FC 5745 - 3.0					TF Mast						
4.1	**Mast Tilt, Fork Carriage**	Forward/backward	α / β	°	5 / 5						
4.2	**Mast Collapsed Height**		h_1	mm	**1960**	**2110**	**2265**	**2415**	**2570**	**2720**	**2875**
4.3	**Free-lift**	With load backrest	h_2	mm	710	860	1015	1165	1320	1470	1625
		Without load backrest	h_2		1270	1420	1570	1725	1875	2030	2180
4.4	**Lift Height**		h_3	mm	**2665**	**2970**	**3275**	**3580**	**3885**	**4190**	**4445**
4.5	**Mast Extended Height**	With load backrest	h_4	mm	3915	4220	4525	4830	5135	5440	5690
		Without load backrest	h_4	mm	3355	3660	3965	4270	4575	4880	5135

FC 5745 - 3.0					TT Mast					
4.1	**Mast Tilt, Fork Carriage**	Forward/backward	α / β	°	5 / 5					
4.2	**Mast Collapsed Height**		h_1	mm	**2110**	**2265**	**2415**	**2570**	**2720**	**2875**
4.3	**Free-lift**	With load backrest	h_2	mm	860	1015	1165	1320	1470	1625
		Without load backrest	h_2		1420	1570	1725	1875	2030	2180
4.4	**Lift Height**		h_3	mm	**4340**	**4800**	**5050**	**5435**	**5815**	**6120**
4.5	**Mast Extended Height**	With load backrest	h_4	mm	5590	6050	6300	6685	7065	7370
		Without load backrest	h_4	mm	5030	5490	5745	6125	6505	6810

Standard Equipment

1. Crown's Access 1 2 3® Comprehensive System Control
2. Intrinsic Stability System™
   - Travel speed reduction and appropriate brake control when forks are above free-lift
   - Forward tilt interlock reduces forward tilt above free-lift to maximise stability
   - Counterweight designed for optimal stability
   - Speed reduction in turns
   - Ramp hold
   - Ramp speed control
3. e-GEN® braking system with automatic parking brake
4. Operator entry/exit
   - 460 mm step height
   - Tubular overhead guard upright for easy hand hold
   - Contoured battery seat deck for easy entry/exit
   - Rounded floorboard edges
   - Large, uncluttered floorboard
5. Operator design features
   - Low dashboard for fork and floor visibility
   - Wide visibility window
   - Comfort suspension seat MSG 65 vinyl with hip restraint
   - Adjustable tilt steering control with sculpted column
   - Steering spinner knob with grips
   - Adjustable D4 Armrest with fingertip control levers
   - Thumb-operated travel direction switch
   - Rubber floor mat/rubber covered pedals
   - Sculpted counterweight for rearward visibility
   - Magnetic orange storage tray on seat deck
6. Crown-manufactured traction and lift motors
7. 48 Volt system
8. SBE 320 blue battery connector
9. Crown display
   - Battery discharge indicator with lift interrupt and re-key feature
   - Parking brake indicator
   - Hour meter/travel distance/stopwatch
   - User code access capable
   - Event code display with five (5) key navigation
   - Access 1 2 3 diagnostics
   - P1, P2, P3 performance tuning
10. High-visibility mast with in-line hose routing
11. Waterfall design overhead guard
12. Lift out or side removal battery access
13. Battery side retainer with interlock and fault identification
14. No tool liftout floorboards
15. Dock performance package
16. Colour-coded wiring
17. InfoPoint® system
18. Three-spool valve
19. O-ring face seal hydraulic fittings
20. Battery disconnect handle
21. Lift interrupt
22. AC hydraulics and on-demand steering
23. Tow pin

Optional Equipment

1. Freezer and corrosion conditioning
2. InfoLink® Ready
3. TL, TF, TT and Quad mast styles
4. Polished and tapered forks
5. Various fork lengths
6. Single or double quick disconnect hydraulic connectors
7. Rear-view mirror
8. Attachment pressure regulator and gauge
9. Special forward tilt
10. Choice of control levers
    - Adjustable Crown D4 Armrest with:
      - Dual-lever controls
      - Mini-lever controls
      - Combination of dual and mini-lever control
    - Manual levers, urethane-covered offset positioned control handles with tactile feedback
11. Directional controls
    - Foot-operated directional control
    - Lever in Crown D4 Armrest (only available for mini, dual or combination controls)
    - Lever integrated in the left side of the steering wheel
12. Storage tray
13. Suspension seat fabric
14. Tilt Position Assist
15. Back-up, brake and tail light
16. Strobe lights
17. Audible travel alarm
18. Floor spotlight, blue or red
19. Floor linelight, blue or red
20. Foot-operated directional control
21. Battery retainer with extended handle
22. Full battery side doors
23. Battery compartment rollers
24. 48 V accessory cable
25. Wide tread widths
26. Load backrest in various heights
27. Drive-in rack overhead guard
28. Non-marking smooth or lugged cushion tyres
29. Work Assist® Accessories
    - Clip pad
    - Hook
    - Storage net
    - Magnetic storage bin
    - Seat deck clip pad
    - Accessory clamp
    - Terminal mounting
    - Shrink wrap holder
    - Cup holder
    - Various storage pocket
30. Rear post handle with horn button
31. Swivel seat
32. Lights on with keyswitch
33. Attachments:
    - Integral or hook-on sideshifter
    - Carton clamp
    - Fork positioner with sideshifter
    - Push Pull
    - Single/Double
34. Overhead guard covers
    - Polycarbonate
    - 2x2 wire mesh
35. DIN A 320 battery connector
36. 5th Function
37. Quick charge options
38. Crown V-Force® Lithium ready

Driveability

The FC 5700 benefits from Crown's design and engineering excellence. Numerous features improve operator comfort and productivity.

A low 460 mm step height first greets the operator. A low, streamlined battery cover helps the operator glide into the truck's seat. The overhead guard is shaped to open up the entry/exit window and its tubular design provides a comfortable hand grip location for a variety of operator heights. The compact tilt steer column and steer wheel further facilitate entry/exit.

The tilt column is spring-loaded to easily move up and away. The floorboard is uncluttered and rubber-covered to insulate the operator from vibration. The sculpted floorboard design promotes visibility to the drive tyres, which can reduce product and pallet damage.

Brake pedal effort is reduced.

Pedal to pedal and floor to pedal relationships are refined for comfort.

Better visibility is everywhere you look: A low cowl for fork and carriage visibility, a high-visibility mast, a compact steer column, a sculpted floorboard and a "waterfall" overhead guard all contribute to superior visibility.

Hydraulic controls allow easy blending of up to 4 hydraulic functions. Fingertip controls are integrated into the adjustable armrest. Dual-lever controls are recommended when operators wear gloves. The manual levers are urethane-covered with tactile feedback for comfort and easy handling. Control actuation forces are minimal and responsive.

The Battery disconnect is easy to reach and operate. Easy to actuate rocker-type switches are conveniently located to select optional work lights or the fan.

A large convex horn button is housed in the centre of the wheel.

Crown Traction System

Crown has applied the latest generation AC traction system, enhanced with Access 1 2 3® technology.

Crown-manufactured, independently controlled AC traction motors are specifically designed to optimise system integration between the traction and braking controls. This control system meets the demand for high-efficiency systems that closely match customer torque requirements.

Crown's Access 1 2 3 technology provides optimum performance and control by offering a communication interface for both operators and technicians, intelligent coordination of lift truck systems and simplified service with advanced diagnostics.

This technology is used for easy troubleshooting, to access the event history and to set performance features.

A fuse box is conveniently located with all test points, control fuses and central wiring for easy troubleshooting.

Three performance levels can be selected to accommodate operator experience or application requirements.

e-GEN® Braking System

Variable regenerative motor braking is optimised and assisted with electric friction brakes, eliminating maintenance associated with typical wet, disk or drum and shoe-style brakes.

This matches the operator brake input with the appropriate amount of stopping force and the current operating conditions of the truck.

The closed loop Access 1 2 3 traction control will keep the truck static until a travel input is requested, even when operating on a ramp. Automatic electric parking brakes activate when the operator leaves the seat, a travel input has not been requested or battery power has been disconnected.

Steering System

Full hydrostatic system with an equal area, double-acting cylinder provides a responsive steering rate both ways (4.8 turns lock to lock). Rugged axle frame, forged spindle and connecting links eliminate the need for adjustment. One-piece forged spindle and kingpin tapered roller bearings for improved life and serviceability. Spherical bearings with tapered pins in connecting links eliminate any play in the linkage. All bearing locations are sealed to exclude contaminants and are equipped with lubrication fittings.

The load sensing hydrostatic steering is an on-demand system which reduces energy consumption.

The steer tiller requires minimal operator effort for a smooth and quiet steering control.

The steering geometry is matched to the controller to deliver smooth steering at all angles. The result is less tyre scrubbing which extends the tyre life.

Both motors receive power, even in the tightest turns. This helps the truck to accelerate, turn and manoeuvre even from a full turn start position.

Speed reduction in turns regulates the traction motor's output by the turning degree of the truck. The advantage is smooth, stable steering which may increase operator confidence and productivity.

Hydraulics

A premium hydraulic function control valve provides precise metering of lift, tilt and accessory functions. The compensating section in the valve provides repeatable function speed, regardless of the load condition. Hydraulic lever actuation is minimal, reducing stress. The compensating section also improves overall system efficiency.

The tilt compensator prevents tilt from lunging or speeding up when operating functions simultaneously.

The Crown lift/tilt interlock system provides extended forward tilt at low fork heights and reduced forward tilt at elevated heights to improve truck stability when forks are elevated.

The control valves' modular design allows easy addition of accessory functions. Maximum lowering speed is limited by a pressure compensating flow control valve and velocity fuses. Integrated hydraulic cylinder cushions soften mast staging. All lift cylinder rams are plated and retract into the hydraulic oil for additional corrosion protection when forks are lowered.

The steel oil reservoir is integral to the frame which helps to dissipate hydraulic oil heat. This clean, leak-free design includes a suction strainer with a separate, easily accessible fill port and a dipstick with filtered breathers. Oil is returned through a replaceable spin-on type oil filter. The hydraulic system provides continuous filtration.

Crown Manufactured Mast Assembly

The mast has four points of attachment to the truck for good load force distribution. Two mounting points are at the frame, where tilt cylinders attach. The tilt cylinders use spherical bushings to resist off centre load distortions. Two large diameter studs secure the mast to the drive units.

The high-visibility mast features a nested-rail design with lift cylinders positioned behind the rails. This heavy-duty mast is engineered to provide smooth and reliable operation. Large hydraulic hose reeves and hose placements are engineered to reduce hose wear and increase hose life. Hose routing places hoses in-line versus side-by-side to reduce visual interference. Large lift chains are used for long reliable service life.

Large diameter lift cylinders provide smooth operation.

Optional TL, TF, TT and quad masts are available.

Batteries

The battery cover lid opens easily to lift out the battery or pull it out sideways. Optional battery rollers are available for use with mechanised extraction equipment. A low battery side retainer is standard. Full battery side doors are optional.

Crown V-Force® Litium ready option comes with full side cover and an access cutout for lateral charging.

Carriage

An ITA Class II or III is standard.

An optional Crown integral sideshifter and hook-on type ITA sideshifters or other attachments can be easily added. Optional fork lengths are available.

Drive Units

Two Crown-manufactured independent double reduction planetary gear drives offer 22 to 1 gear reduction. The first and second reduction use helical gears for low-noise and efficiency. The drive unit gears are splash-lubricated in an oil bath.

Other Options

1. Audible travel alarm
2. Flashing lights

Safety considerations and dangers associated with audible travel alarms and flashing lights include:

- Multiple alarms and/or lights can cause confusion.
- Workers ignore the alarms and/or lights after day-in and day-out exposure.
- Operator may transfer the responsibility for "looking out" to the pedestrians.
- Annoys operators and pedestrians.

Safety Regulations

Conforms to European safety standards. Dimensions and performance data given may vary due to manufacturing tolerances. Performance is based on an average size vehicle and is affected by weight, truck condition, truck equipment and the conditions of the operating area. Crown products and specifications are subject to change without notice.

FC 5700 SPEC GB 05/22, 10
M03433-006-06
Printed in Germany

ISO 9001 Quality Management System certified for the design, development, manufacture, sale and product support of industrial trucks.

European Manufacturing:
Crown Gabelstapler GmbH & Co. KG

Продавец:
kupit-shtabeler.ru
+7 495 159-44-32
zakaz@kupit-shtabeler.ru