C-G

2,000 - 3,500 kg Capacity

Specifications

LPG Counterbalance Lift Truck

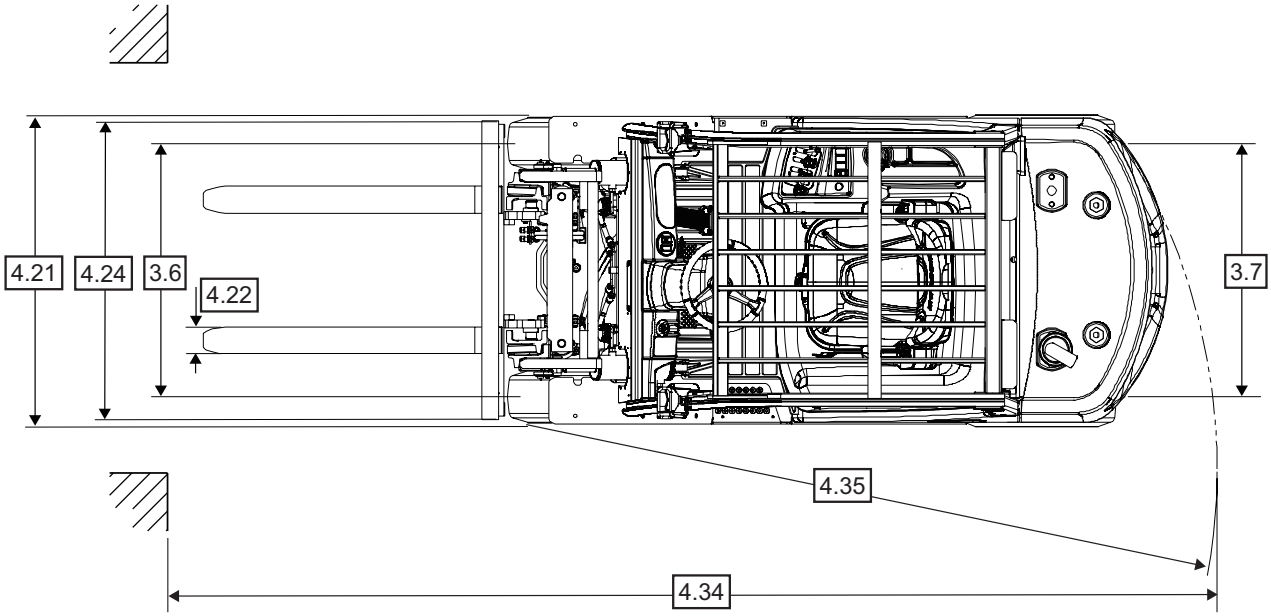
4.21
4.24
3.6
4.22
3.7
4.35
4.34

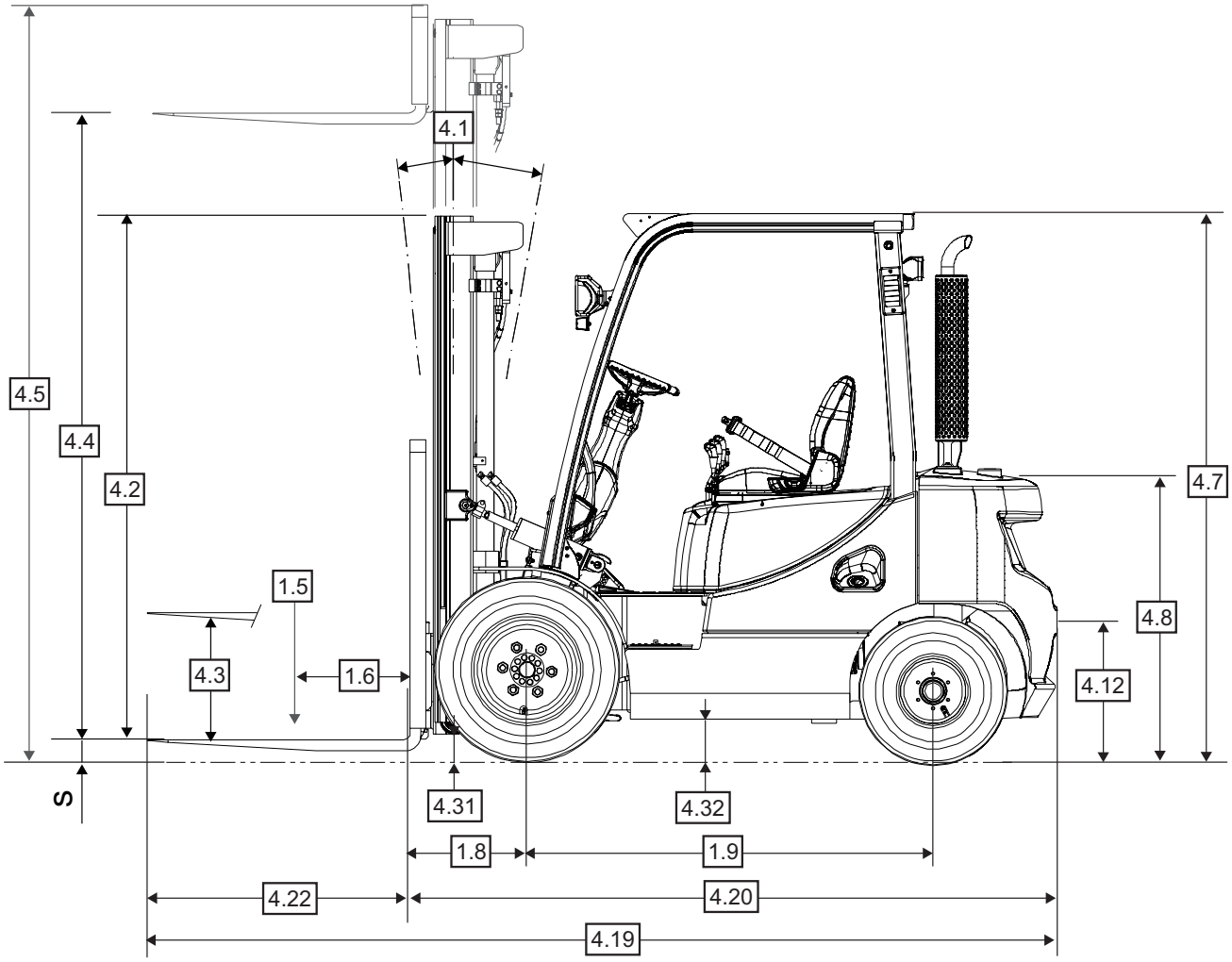
4.1
4.5
4.4
4.2
4.7
1.5
4.8
4.3
1.6
4.12
S
4.31
4.32
1.8
1.9
4.22
4.20
4.19

Distinguishing Mark	1.2	**Model**				**C-G 20 E-7**	**C-G 25 E-7**	**C-G 30 E-7**	**C-G 33 E-7**	**C-G 35 EC-7**
	1.3	**Power Source**	Electric, Diesel, LPG, Gasoline			LPG				
	1.4	**Operator Type**				Sit-down Rider Counterbalance				
	1.5	**Rated Capacity/Rated Load**		Q	t	2.0	2.5	3.0	3.25	3.5
	1.6	**Load Centre**		c	mm	500				
	1.8	**Load Distance**	Center of wheel to fork face	x	mm	480		485		495
	1.9	**Wheelbase**		y	mm	1625		1700		
Weight	2.1	**Service Weight**			kg	3585	3965	4390	4565	4770
	2.2	**Axle Load**	With load front / rear		kg	4925/660	5645/820	6485/905	6835/980	7240/1030
	2.3	**Axle Load**	Without load front / rear		kg	1720/1865	1640/2325	1745/2645	1700/2865	1690/3080
Tyres/Wheels/Ch.	3.1	**Tyres**				Pneumatic / Super Elastic				
	3.2	**Tyre Size**	Front, OD x Width x Rim Dia.		mm	7.00X15-12		28X9X15-12		250x15-18
	3.3	**Tyre Size**	Rear, OD x Width x Rim Dia.		mm	6.50X10-10			6.50X10-12	
	3.5	**Wheels**	Number (x=driven) front/rear			2x / 2				
	3.6	**Tread**	Front	b_{10}	mm	975		982		1026
	3.7	**Tread**	Rear	b_{11}	mm	1000				
Dimensions	4.1	**Mast Tilt, Fork Carriage**	Forward / backward	α / β	°	6 / 10				
	4.2	**Mast Collapsed Height**		h_1	mm	2175		2165		
	4.3	**Free-lift**		h_2	mm	147		152		
	4.4	**Lift Height**		h_3	mm	3230				3000
	4.5	**Mast Extended Height**		h_4	mm	4490				4260
	4.7	**Overhead Guard Height**		h_6	mm	2183				
	4.8	**Seat Height**	Relating to SIP/stand height	h_7	mm	1026				
	4.12	**Coupler Height**		h_{10}	mm	417				
	4.19	**Overall Length**		l_1	mm	3565	3630	3744		3809
	4.20	**Head Length**	Length to fork face	l_2	mm	2530	2595	2700	2730	2765
	4.21	**Overall Width**		b_1	mm	1170		1197		1255
	4.22	**Fork Dimension**	DIN ISO 2331	s/e/l	mm	40x100x1050		45x125x1050		
	4.23	**Fork Carriage**	ISO 2328, Class/Type A		class	II/A	II/A	III/A	III/A	III/A
	4.24	**Fork Carriage Width**		b_3	mm	1103		1115		
	4.31	**Ground Clearance**	With load, below mast	m_1	mm	115		105		
	4.32		With load, centre wheelbase	m_2	mm	143				
	4.34.1	**Aisle Width**	For pallets 1000x1200 crossways	A_{st}	mm	3900	3945	4050	4080	4115
	4.34.2		For pallets 800x1200 lengthways	A_{st}	mm	4100	4145	4250	4280	4315
	4.35	**Turning Radius**		W_a	mm	2220	2265	2365	2395	2420
	4.36	**Internal Turning Radius**		b_{13}	mm	775		761		
Performance Data	5.1	**Travel Speed**	With load / without load		km/h	19/20		18/19		
	5.2	**Lift Speed**	With load / without load		m/s	0.55/0.57	0.54/0.57	0.52/0.57	0.54/0.59	0.53/0.59
	5.3	**Lowering Speed**	With load / without load		m/s	0.51/0.46				
	5.5	**Drawbar Pull**	With load / without load (5 min. rating)		N	17346/17080	17738/17274	17934/17655	17836/17674	17248/17024
	5.6	**Max. Drawbar Pull**	With load / without load (5 min. rating)		N	19698/19251	20188/19460	20678/20046	20580/20083	19796/19194
	5.8	**Max. Gradeability**	With load / without load (5 min. rating)		%	38.2/53.5	33.4/56.7	30.0/52.8	27.9/50.4	25.1/44.6
	5.10	**Service Brake**	Service brake			Foot / Hydraulic				
			Parking brake			Hand / Mechanical				
Combustion Engine	7.1	**Engine Manufacturer / Type**				HMC 2.4				
	7.2	**Engine Power according to ISO 1585**			kW	45.4				
	7.3	**Rated Speed**			min-1	2600				
	7.3.1	**Torque at 1/min**			Nm	179				
	7.4	**Number of Cylinders/Displacement**			- / cm^3	4 / 2359				
	7.5	**Fuel Consumption as per EN 16796 (LPG)**			kg/h	2.7	2.9	3.2	3.4	3.5
	7.5.6	**CO2 equivalent as per EN 16796 (LPG)**			kg/h	9.2	9.8	10.9	11.5	11.9
	7.10	**Battery Voltage/Nominal Capacity**			V / Ah	12 / 50				
Add. Data	10.1	**Available Working Pressure for Attachments**			bar	156				
	10.2	**Oil Flow for Attachments**			l/min	60				
	10.4	**Fuel Tank Capacity**			l	51				

Note: Values listed in the specification sheet have been rounded. Performance may vary due to operation conditions and / or forklift configurations.
Products and specifications are subject to change without prior notice.

Mast Chart C-G 20 E-7

Mast Type	Max. Fork Height h_3	Mast Collapsed Height h_1	Mast Extended Height h_4		Mast Free-lift Height h_2		Rated Load Capacities								
							Tilt Angle						Load Capacities		
			With Load Backrest	Without Load Backrest	With Load Backrest	Without Load Backrest	Single Pneumatic		Double Pneumatic		Single Solid		Single Pneumatic	Double Pneumatic	Single Solid
							FWD	BWD	FWD	BWD	FWD	BWD	LC 500 mm	LC 500 mm	LC 500 mm
	mm	mm	mm	mm	mm	mm	deg	deg	deg	deg	deg	deg	kg	kg	kg
TL	2030	1575	3290	2830	147	147	6	10	6	10	6	10	2000	2000	2000
	2580	1850	3840	3380	147	147	6	10	6	10	6	10	2000	2000	2000
	2950	2035	4210	3750	147	147	6	10	6	10	6	10	2000	2000	2000
	3230	2175	4490	4030	147	147	6	10	6	10	6	10	2000	2000	2000
	3500	2425	4765	4305	147	147	6	10	6	10	6	10	2000	2000	2000
	3800	2575	5065	4605	147	147	6	10	6	10	6	10	2000	2000	2000
	3950	2650	5215	4755	147	147	6	10	6	10	6	10	2000	2000	2000
	4350	2850	5615	5155	147	147	6	10	6	10	6	10	2000	2000	2000
	4960	3150	6215	5755	147	147	6	5	6	10	6	10	1900	1925	1975
TF	2580	1850	3840	3310	645	1175	6	10	6	10	6	10	2000	2000	2000
	2950	2035	4210	3680	830	1360	6	10	6	10	6	10	2000	2000	2000
	3230	2175	4490	3960	970	1500	6	10	6	10	6	10	2000	2000	2000
	3600	2425	4865	4335	1220	1750	6	10	6	10	6	10	2000	2000	2000
TT	3900	1900	5165	4635	695	1200	6	8	6	8	6	8	2000	2000	2000
	4290	2035	5570	5040	830	1335	6	8	6	8	6	8	2000	2000	2000
	4730	2175	5990	5460	970	1475	6	8	6	8	6	8	1950	1950	2000
	4805	2200	6065	5535	995	1500	6	5	6	8	6	8	1950	1925	2000
	5560	2525	6815	6285	1320	1825	6	3	6	8	6	8	1650	1825	1875
	6010	2675	7265	6735	1470	1975	6	3	6	8	6	5	1300	1750	1825

Mast Chart C-G 25 E-7

Mast Type	Max. Fork Height h_3	Mast Collapsed Height h_1	Mast Extended Height h_4		Mast Free-lift Height h_2		Rated Load Capacities								
							Tilt Angle						Load Capacities		
			With Load Backrest	Without Load Backrest	With Load Backrest	Without Load Backrest	Single Pneumatic		Double Pneumatic		Single Solid		Single Pneumatic	Double Pneumatic	Single Solid
							FWD	BWD	FWD	BWD	FWD	BWD	LC 500 mm	LC 500 mm	LC 500 mm
	mm	mm	mm	mm	mm	mm	deg	deg	deg	deg	deg	deg	kg	kg	kg
TL	2030	1575	3290	2830	147	147	6	10	6	10	6	10	2500	2500	2500
	2580	1850	3840	3380	147	147	6	10	6	10	6	10	2500	2500	2500
	2950	2035	4210	3750	147	147	6	10	6	10	6	10	2500	2500	2500
	3230	2175	4490	4030	147	147	6	10	6	10	6	10	2500	2500	2500
	3500	2425	4765	4305	147	147	6	10	6	10	6	10	2500	2500	2500
	3800	2575	5065	4605	147	147	6	10	6	10	6	10	2500	2500	2500
	3950	2650	5215	4755	147	147	6	10	6	10	6	10	2500	2500	2500
	4350	2850	5615	5155	147	147	6	5	6	10	6	10	2500	2500	2500
	4960	3150	6215	5755	147	147	6	3	6	10	6	10	2075	2450	2500
TF	2580	1850	3840	3310	645	1175	6	10	6	10	6	10	2500	2500	2500
	2950	2035	4210	3680	830	1360	6	10	6	10	6	10	2500	2500	2500
	3230	2175	4490	3960	970	1500	6	10	6	10	6	10	2500	2500	2500
	3600	2425	4865	4335	1220	1750	6	10	6	10	6	10	2500	2500	2500
TT	3900	1900	5165	4635	695	1200	6	8	6	8	6	8	2500	2500	2500
	4290	2035	5570	5040	830	1335	6	5	6	8	6	8	2500	2500	2500
	4730	2175	5990	5460	970	1475	6	3	6	8	6	8	2450	2500	2500
	4805	2200	6065	5535	995	1500	6	3	6	8	6	8	2350	2475	2475
	5560	2525	6815	6285	1320	1825	6	3	6	8	6	5	1525	2325	2400
	6010	2675	7265	6735	1470	1975	6	3	6	8	6	3	1175	2250	2300

Note: Mast specifications and rated capacities are based on standard chassis equipped with Pneumatic tyre.

Mast Chart C-G 30 E-7

Mast Type	Max. Fork Height h_3	Mast Collapsed Height h_1	Mast Extended Height h_4		Mast Free-lift Height h_2		Rated Load Capacities								
							Tilt Angle						Load Capacities		
			With Load Backrest	Without Load Backrest	With Load Backrest	Without Load Backrest	Single Pneumatic		Double Pneumatic		Single Solid		Single Pneumatic	Double Pneumatic	Single Solid
							FWD	BWD	FWD	BWD	FWD	BWD	LC 500 mm	LC 500 mm	LC 500 mm
	mm	mm	mm	mm	mm	mm	deg	deg	deg	deg	deg	deg	kg	kg	kg
TL	2030	1565	3290	2880	152	152	6	10	6	10	6	10	3000	3000	3000
	2580	1840	3840	3430	152	152	6	10	6	10	6	10	3000	3000	3000
	2950	2025	4210	3800	152	152	6	10	6	10	6	10	3000	3000	3000
	3230	2165	4490	4080	152	152	6	10	6	10	6	10	3000	3000	3000
	3500	2415	4765	4355	152	152	6	10	6	10	6	10	3000	3000	3000
	3800	2565	5065	4655	152	152	6	10	6	10	6	10	3000	3000	3000
	3950	2640	5215	4805	152	152	6	10	6	10	6	10	3000	3000	3000
	4350	2840	5615	5205	152	152	6	5	6	10	6	10	3000	3000	3000
	4960	3140	6215	5805	152	152	6	3	6	10	6	10	2525	2900	2975
TF	2580	1840	3840	3355	640	1125	6	10	6	10	6	10	3000	3000	3000
	2950	2025	4210	3725	825	1310	6	10	6	10	6	10	3000	3000	3000
	3230	2165	4490	4005	965	1450	6	10	6	10	6	10	3000	3000	3000
	3600	2415	4865	4380	1215	1700	6	10	6	10	6	10	3000	3000	3000
TT	3900	1890	5165	4680	690	1175	6	8	6	8	6	8	2900	2900	2900
	4290	2025	5570	5085	825	1310	6	8	6	8	6	8	2900	2900	2900
	4730	2165	5990	5505	965	1450	6	3	6	8	6	8	2900	2900	2900
	4805	2190	6065	5580	990	1470	6	3	6	8	6	8	2825	2900	2900
	5560	2515	6815	6330	1315	1800	6	3	6	8	6	5	1850	2750	2825
	6010	2665	7265	6780	1465	1950	6	3	6	5	6	3	1425	2675	2750

Mast Chart C-G 33 E-7

Mast Type	Max. Fork Height h_3	Mast Collapsed Height h_1	Mast Extended Height h_4		Mast Free-lift Height h_2		Rated Load Capacities								
							Tilt Angle						Load Capacities		
			With Load Backrest	Without Load Backrest	With Load Backrest	Without Load Backrest	Single Pneumatic		Double Pneumatic		Single Solid		Single Pneumatic	Double Pneumatic	Single Solid
							FWD	BWD	FWD	BWD	FWD	BWD	LC 500 mm	LC 500 mm	LC 500 mm
	mm	mm	mm	mm	mm	mm	deg	deg	deg	deg	deg	deg	kg	kg	kg
TL	2030	1565	3290	2880	152	152	6	10	6	10	6	10	3250	3250	3250
	2580	1840	3840	3430	152	152	6	10	6	10	6	10	3250	3250	3250
	2950	2025	4210	3800	152	152	6	10	6	10	6	10	3250	3250	3250
	3230	2165	4490	4080	152	152	6	10	6	10	6	10	3250	3250	3250
	3500	2415	4765	4355	152	152	6	10	6	10	6	10	3250	3250	3250
	3800	2565	5065	4655	152	152	6	10	6	10	6	10	3250	3250	3250
	3950	2640	5215	4805	152	152	6	10	6	10	6	10	3175	3250	3250
	4350	2840	5615	5205	152	152	6	5	6	10	6	10	3175	3250	3250
	4960	3140	6215	5805	152	152	6	3	6	10	6	8	2450	3125	3200
TF	2580	1840	3840	3355	640	1125	6	10	6	10	6	10	3250	3250	3250
	2950	2025	4210	3725	825	1310	6	10	6	10	6	10	3250	3250	3250
	3230	2165	4490	4005	965	1450	6	10	6	10	6	10	3250	3250	3250
	3600	2415	4865	4380	1215	1700	6	10	6	10	6	10	3250	3250	3250
TT	3900	1890	5165	4680	690	1175	6	8	6	8	6	8	3250	3250	3250
	4290	2025	5570	5085	825	1310	6	5	6	8	6	8	3250	3250	3250
	4730	2165	5990	5505	965	1450	6	3	6	8	6	8	2900	3175	3250
	5560	2515	6815	6330	1315	1800	6	3	6	8	6	5	1750	2975	3050
	6010	2665	7265	6780	1465	1950	6	3	6	5	6	3	1350	2875	2950

Note: Mast specifications and rated capacities are based on standard chassis equipped with Pneumatic tyre.

Mast Chart C-G 35 EC-7

Mast Type	Max. Fork Height h_3	Mast Collapsed Height h_1	Mast Extended Height h_4		Mast Free-lift Height h_2		Rated Load Capacities								
							Tilt Angle						Load Capacities		
			With Load Backrest	Without Load Backrest	With Load Backrest	Without Load Backrest	Single Pneumatic		Double Pneumaticd		Single Solid		Single Pneumatic	Double Pneumatic	Single Solid
							FWD	BWD	FWD	BWD	FWD	BWD	LC 500 mm	LC 500 mm	LC 500 mm
	mm	mm	mm	mm	mm	mm	deg	deg	deg	deg	deg	deg	kg	kg	kg
TL	1800	1565	3060	2780	152	152	6	10	6	10	6	10	3500	3500	3500
	2350	1840	3610	3330	152	152	6	10	6	10	6	10	3500	3500	3500
	2720	2025	3980	3700	152	152	6	10	6	10	6	10	3500	3500	3500
	3000	2165	4260	3980	152	152	6	10	6	10	6	10	3500	3500	3500
	3495	2415	4760	4480	152	152	6	10	6	10	6	10	3500	3500	3500
	3655	2565	4915	4635	152	152	6	10	6	10	6	10	3500	3500	3500
	3805	2640	5065	4785	152	152	6	10	6	10	6	10	3500	3500	3500
	4205	2840	5465	5185	152	152	6	8	6	10	6	10	3425	3425	3500
	4805	3140	6065	5785	152	152	6	3	6	8	6	8	3250	3275	3375
TF	2350	1840	3610	3305	640	945	6	10	6	10	6	10	3500	3500	3500
	2720	2025	3980	3675	825	1130	6	10	6	10	6	10	3500	3500	3500
	3000	2165	4260	3955	965	1270	6	10	6	10	6	10	3500	3500	3500
	3495	2415	4755	4450	1215	1520	6	10	6	10	6	10	3500	3500	3500
TT	3555	1890	4815	4510	690	995	6	8	6	8	6	8	3400	3400	3400
	3960	2025	5220	4915	825	1130	6	8	6	8	6	8	3400	3400	3400
	4380	2165	5640	5335	965	1270	6	5	6	8	6	8	3375	3375	3400
	4820	2335	6085	5775	1135	1440	6	3	6	8	6	8	3250	3250	3350
	5205	2515	6465	6160	1315	1620	6	3	6	8	6	5	2600	3150	3250
	5655	2665	6915	6610	1465	1770	6	3	6	5	6	3	1975	3050	3150

Note: Mast specifications and rated capacities are based on standard chassis equipped with Pneumatic tyre.

Standard Features

1. Euro stage V Engine
2. Directional lever
3. Mast interlock - tilt, lift and lower
4. 3-way valve, 3 levers
5. Waterproof connectors
6. Dual element air cleaner
7. Full floating driveaxle with oil-cooled disc brakes
8. Easy to service
   - Integrated electric components in the junction box (relays and fuses)
   - Toolless access to the side floor mat and plate
   - Wide hood open range
9. Operator design features
   - Clear-view overhead guard and mast design
   - Wide, spacious floorboard
   - Removable floor mat and plate
   - Operator Presence Sensor
   - Parking brake alarm
   - Entry grab bar
   - LCD screen
   - Seat belt indicator
   - Adjustable steer column
   - Small steering wheel
   - 12 V electrical outlet

Optional Equipment

1. Operator design features
   - Auto tilt leveling
   - Mirrors
   - Premium suspension seat with: armrest, seat heater and lumbar support
   - Modular cabin versions
   - Heater for hard cabin
   - Radio with MP3 player
2. Lights
   - LED Front worklights with turn signals
   - LED Rear lights with back-up and turn signals
   - LED Rear worklights
3. Audible warning devices
   - Back-up travel alarm
4. Visual warning devices
   - Flashing light
   - Floor spot light (blue light)
5. Attachments
   - Hang-on sideshifter
   - Fork positioner with integrated sideshifter
6. Rear-view camera for hard cabin
7. InfoLink® Ready

Warning Device Notes

Audible or visual alerts

Safety considerations and dangers associated with audible travel alarms and lights include:

- Multiple alarms and/or lights can cause confusion.
- Workers ignore the alarms and/or lights after day-in and day-out exposure.
- Operator may transfer the responsibility for “looking out” to the pedestrians.
- Annoys operators and pedestrians.

Other Options Available

Contact Crown for additional options.

Dimensions and performance data given may vary due to manufacturing tolerances. Performance is based on an average size vehicle and is affected by weight, truck condition, truck equipment and the conditions of the operating area. Crown products and specifications are subject to change without notice.

C-G 20-35 SPEC GB 06/24, 10
M03535-006-03
Printed in Germany

ISO 9001 Quality Management System certified for the design, development, manufacture, sale and product support of industrial trucks.

European Manufacturing:
Crown Gabelstapler GmbH & Co. KG
Продавец:
kupit-shtabeler.ru
+7 495 159-44-32
zakaz@kupit-shtabeler.ru