DT 3000
SERIES

Specifications
Double Stacker

DT 3040-2.0 without platform
mechanical steering

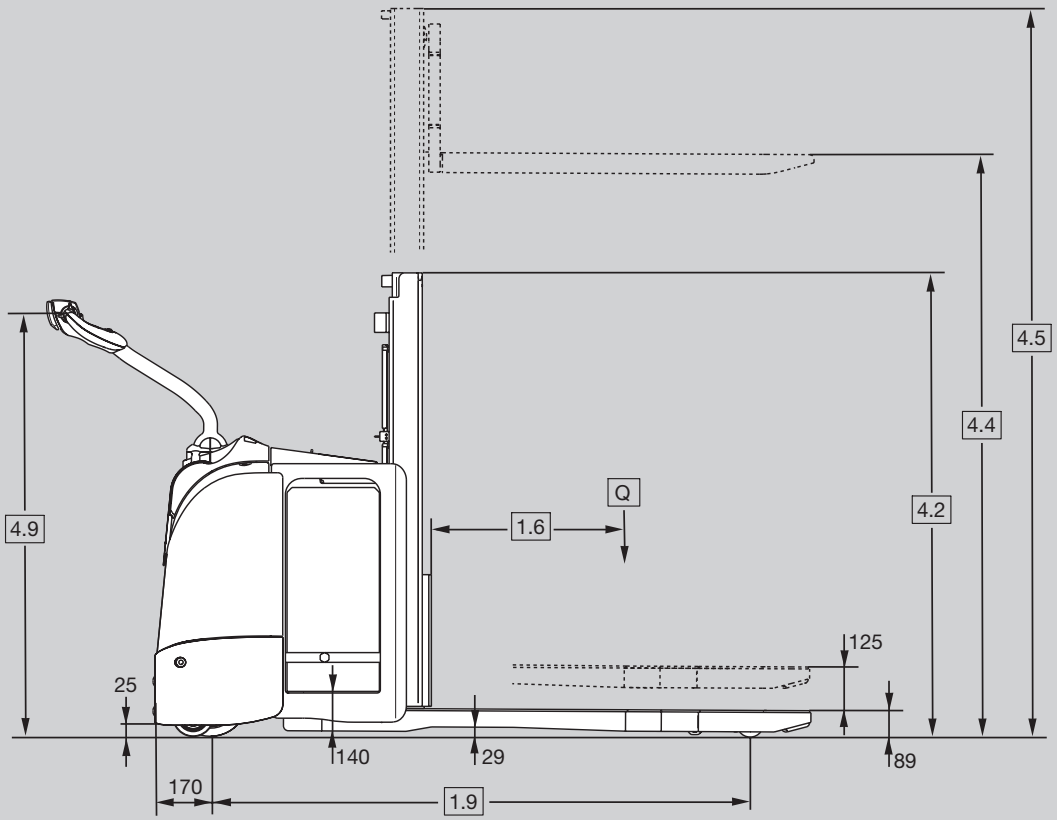

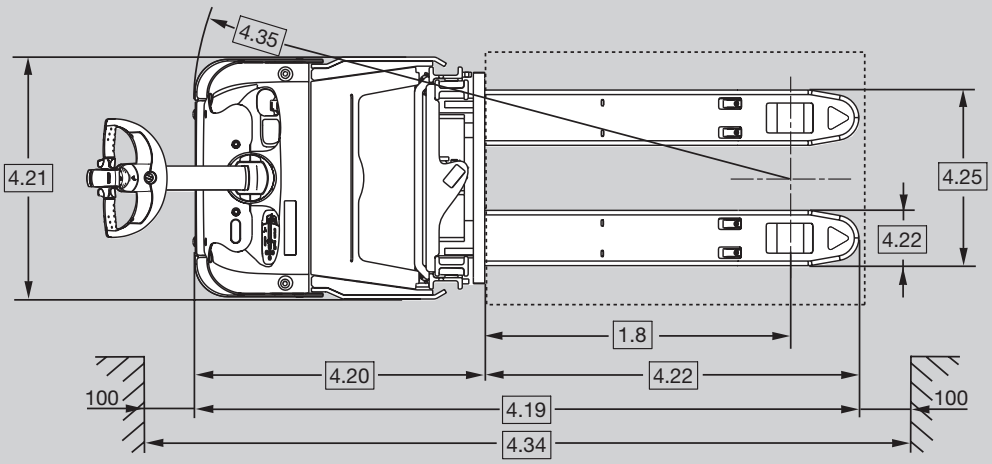

Destinguishing Mark	1.1	**Manufacturer**				Crown Equipment Corporation		
	1.2	**Model**				**DT 3040-2.0**		
			platform type			without platform		
			steering type			mechanical		
	1.3	**Power Source**				electric		
	1.4	**Operator Type**				pedestrian		
	1.5	**Rated Capacity ***		Q	t	2.0		
	1.6	**Load Centre**		c	mm	600		
	1.8	**Load Distance**	initial lift raised / lowered	x	mm	875 / 940		
	1.9	**Wheelbase**	initial lift raised / lowered	y	mm	1521 / 1589	1593 / 1661	
Tyres/Wheels/Chassis	3.1	**Tyres**				Vulkollan		
	3.2	**Tyre Size**	front		mm	Ø 230 x 70		
	3.3	**Tyre Size**	rear		mm	Ø 82 x 110		
	3.4	**Additional Wheels**	castor wheel		mm	Ø 125 x 54		
	3.5	**Wheels**	number front/rear (x=driven wheels)			1x + 2/2		
	3.6	**Tread**	front	b_{10}	mm	512		
	3.7	**Tread**	rear	b_{11}	mm	370		
Dimensions	4.6	**Initial Lift**	collapsed height	h_5	mm	125		
	4.9	**Height Control Handle**	in driving position min./max.	h_{14}	mm	960 / 1460		
	4.10	**Outrigger**		h_8	mm	83		
	4.15	**Fork Height**	lowered	h_{13}	mm	89		
	4.19	**Overall Length**	initial lift raised / lowered	l_1	mm	1986 / 1968	2058 / 2040	
	4.20	**Head Length**	initial lift raised / lowered	l_2	mm	836 / 818	908 / 890	
	4.21	**Overall Width**		b_1	mm	744		
	4.22	**Fork Dimensions**	DIN ISO 2331	s/e/l	mm	60 x 186 x 1150		
	4.24	**Fork Carriage Width**	optional length	b_3	mm	650		
	4.25	**Fork Spread**		b_5	mm	560		
	4.31	**Ground Clearance**	with load below mast	m_1	mm	17		
	4.32	**Ground Clearance**	centre wheelbase	m_2	mm	29		
	4.34.1	**Aisle Width**	for pallets 1000 × 1200 crossways	A_{st}	mm	2533	2605	
	4.34.2	**Aisle Width**	for pallets 800 × 1200 lengthways	A_{st}	mm	2435	2507	
	4.35	**Turning Radius**	initial lift raised / lowered	Wa	mm	1720 / 1778	1792 / 1850	
Performance Data	5.1	**Travel Speed**	with / without load		km/h	6.0 / 6.0		
	5.1.1	**Travel Speed Backwards**	with / without load		km/h	6.0 / 6.0		
	5.2	**Lift Speed**	with / without load		m/s	0.18 / 0.30		
	5.3	**Lowering Speed**	with / without load		m/s	0.30 / 0.30		
	5.7	**Gradeability**	with / without load		%	6 / 15		
	5.8	**Max. Gradeability**	with / without load, 5 min. rating		%	6 / 15		
	5.10	**Service Brake**				electric		
Electric Motor	6.1	**Traction Motor**	rating at S2 60 min. / H-class		kW	3.0		
	6.2	**Pump Motor**	rating at S3 10%		kW	2.2		
	6.3	**Battery**	according to DIN 43531/35/36 A, B, C, no			B		
		Max. Battery Box Size		lxwxh	mm	212 x 624 x 627	284 x 624 x 627	
	6.4	**Battery Voltage**	nominal capacity 5h rating		V/Ah	24 / 230-250	24 / 315-375	
	6.5	**Battery Weight**			kg	201 - 223	274 - 302	
	8.1	**Drive Unit**	drive			AC-transistor		
	10.7	**Sound Pressure Level**	at the operator's seat		dB(A)	59		

* as double stacker 1000 kg + 1000 kg, as pallet truck 2000 kg and as stacker 1000 kg

Mast

	1.2	**Model**				**DT 3040-2.0**				
		Mast Type				TL				TF
Weight	2.1	**Service Weight**	less battery		kg	810	840	830	860	950
	2.2	**Axle Load**	with load	front	kg	1225	1255	1245	1275	1320
				rear	kg	1835	1865	1855	1885	1930
	2.3	**Axle Load**	without load	front	kg	875	905	895	925	970
				rear	kg	185	215	205	235	280
Dimensions	4.2	**Mast**	collapsed height	h_1	mm	1270	1430	1270	1430	1740
	4.3	**Free-lift**		h_2	mm	-	-	-	-	1355
	4.4	**Lift Height**		h_3+h_{13}	mm	**1670**	**2100**	**1670**	**2100**	**2600**
	4.5	**Mast**	extended height	h_4	mm	2100	2500	2100	2500	3025
	6.4	**Battery Voltage**	nominal capacity K_5		V/Ah	24 / 230-250		24 / 315-375		

DT 3040-2.0 foldable platform
mechanical or electric steering

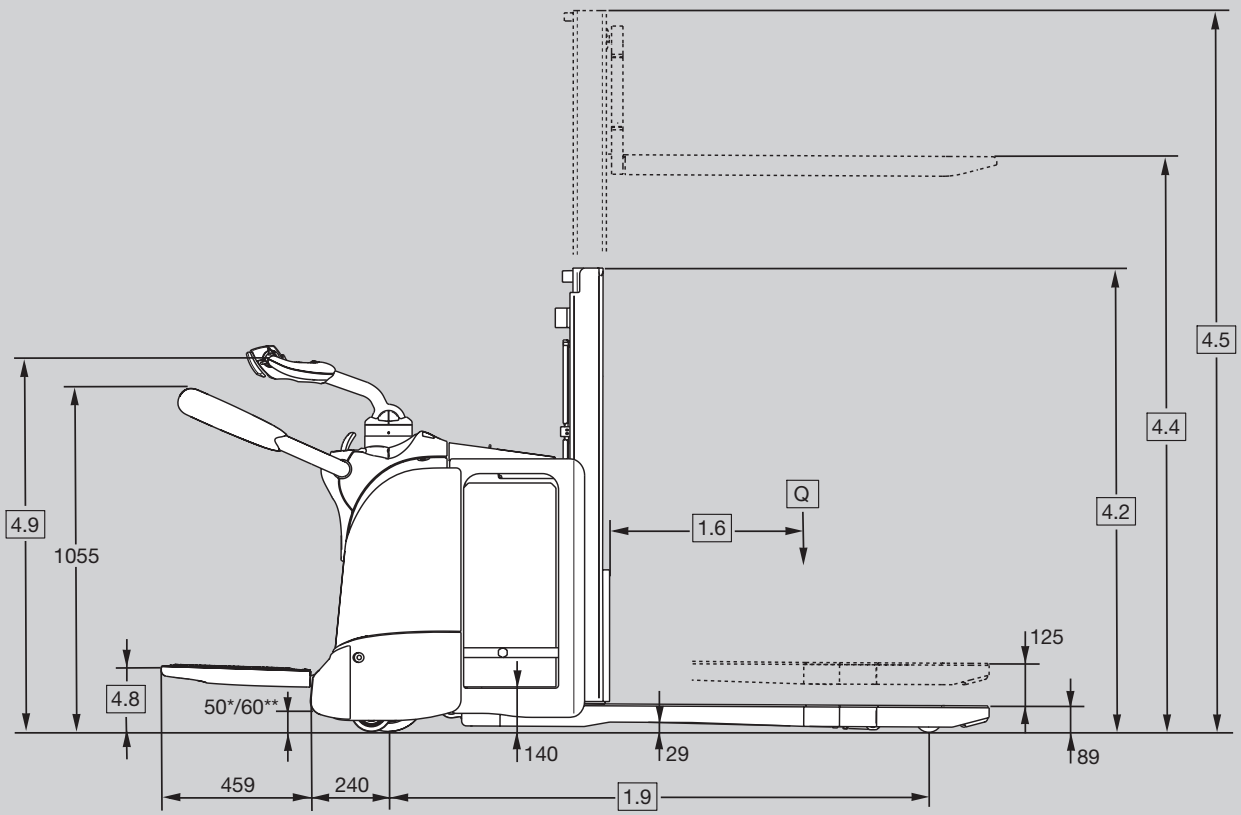

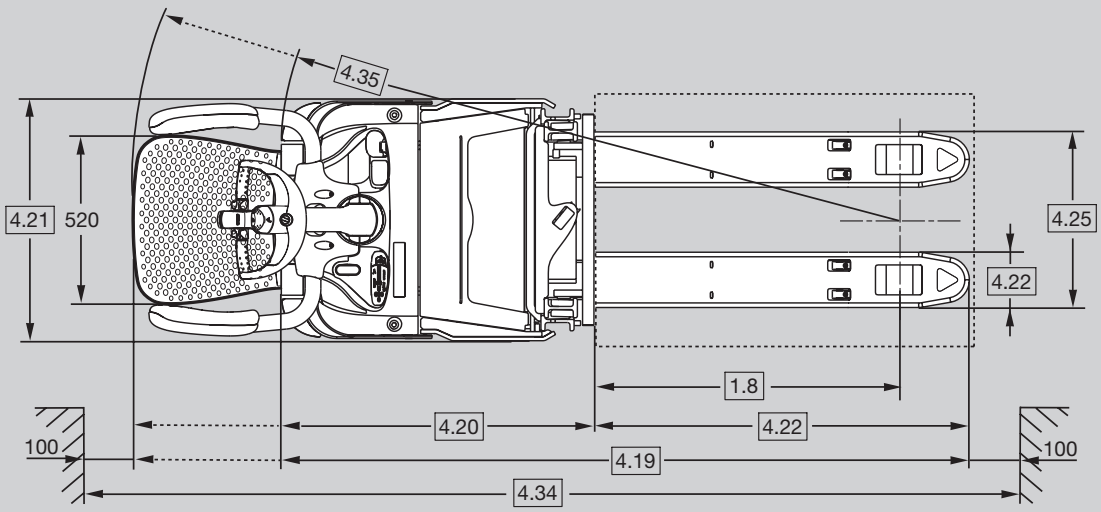

* 50 mm with mechanical steering
** 60 mm with electric steering

Destinguishing Mark	1.1	**Manufacturer**				Crown Equipment Corporation				
	1.2	**Model**				**DT 3040-2.0**				
			platform type			foldable platform		rear entry		side entry
			steering type			mechanical	electric	mechanical	electric	
	1.3	**Power Source**				electric				
	1.4	**Operator Type**				pedestrian / stand-on		stand-on		
	1.5	**Rated Capacity ***		Q	t	2.0				
	1.6	**Load Centre**		c	mm	600				
	1.8	**Load Distance**	initial lift raised / lowered	x	mm	875 / 940				
	1.9	**Wheelbase**	initial lift raised / lowered	y	mm	1593 / 1661				
Tyres/Wheels/Chassis	3.1	**Tyres**				Vulkollan				
	3.2	**Tyre Size**	front		mm	Ø 230 x 70	Ø 250 x 75	Ø 230 x 70	Ø 250 x 75	
	3.3	**Tyre Size**	rear		mm	Ø 82 x 110				
	3.4	**Additional Wheels**	castor wheel		mm	Ø 125 x 54				
	3.5	**Wheels**	number front/rear (x=driven wheels)			1x + 2/2				
	3.6	**Tread**	front	b_{10}	mm	512				
	3.7	**Tread**	rear	b_{11}	mm	370				
Dimensions	4.6	**Initial Lift**	collapsed height	h_5	mm	125				
	4.8	**Seat Height**	relating to SIP / stand height	h_7	mm	186		197		
	4.9	**Height Control Handle**	in driving position min./max.	h_{14}	mm	1056 / 1359		1054 / 1323	1249	
	4.10	**Outrigger**		h_8	mm	83				
	4.15	**Fork Height**	lowered	h_{13}	mm	89				
	4.19	**Overall Length *****	initial lift raised / lowered	l_1	mm	2128 / 2588		2622		2703
	4.20	**Head Length *****	initial lift raised / lowered	l_2	mm	978 / 1438		1472		1553
	4.21	**Overall Width**		b_1	mm	744				
	4.22	**Fork Dimensions**	DIN ISO 2331	s/e/l	mm	60 x 186 x 1150				
	4.24	**Fork Carriage Width**	optional length	b_3	mm	650				
	4.25	**Fork Spread**		b_5	mm	560				
	4.31	**Ground Clearance**	with load below mast	m_1	mm	17				
	4.32	**Ground Clearance**	Centre Wheelbase	m_2	mm	29				
	4.34.1	**Aisle Width**	for pallets 1000 × 1200 crossways	Ast	mm	2688 / 3115		3150		3240
	4.34.2	**Aisle Width**	for pallets 800 × 1200 lengthways	Ast	mm	2572 / 3017		3052		3142
	4.35	**Turning Radius ****	initial lift raised / lowered	Wa	mm	1857 / 2302		2337		2427
Performance Data	5.1	**Travel Speed**	with / without load		km/h	6.5 / 10.5	9.5 / 12.5	6.8 / 10.5	9.8 / 12.5	
	5.1.1	**Travel Speed Backwards**	with / without load		km/h	6.5 / 10.5	9.5 / 12.5	6.8 / 10.5	9.8 / 12.5	
	5.2	**Lift Speed**	with / without load		m/s	0.18 / 0.30				
	5.3	**Lowering Speed**	with / without load		m/s	0.30 / 0.30				
	5.7	**Gradeability**	with / without load		%	6 / 15				
	5.8	**Max. Gradeability**	with / without load, 5 min. rating		%	6 / 15				
	5.10	**Service Brake**				electric				
Electric Motor	6.1	**Traction Motor**	rating at S2 60 min. / H-class		kW	3.0	4.0	3.0	4.0	
	6.2	**Pump Motor**	rating at S3 10%		kW	2.2				
	6.3	**Battery**	according to DIN 43531/35/36 A, B, C, no			B				
		Max. Battery Box Size		lxwxh	mm	284 x 624 x 627				
	6.4	**Battery Voltage**	nominal capacity 5h rating		V/Ah	24 / 315-375				
	6.5	**Battery Weight**			kg	274 - 302				
	8.1	**Drive Unit**	drive			AC-transistor				
	10.7	**Sound Pressure Level**	at the operator's seat		dB(A)	59				

Mast

	1.2	**Model**				**DT 3040-2.0**								
			platform type			foldable platform						rear entry		side entry
			steering type			mechanical			electric			mechanical	electric	
		Mast Type				TL		TF	TL		TF	TL		
Weight	2.1	**Service Weight**	less battery		kg	930	960	1050	960	990	1080	1049	1093	1078
	2.2	**Axle Load**	with load	front	kg	1310	1325	1370	1370	1385	1430	1418	1452	1442
				rear	kg	1920	1935	1980	1890	1905	1950	1933	1943	1938
	2.3	**Axle Load**	without load	front	kg	960	975	1020	960	975	1020	1088	1112	1092
				rear	kg	270	285	330	280	295	340	263	283	288
Dimensions	4.2	**Mast**	collapsed height	h_1	mm	1270	1430	1740	1270	1430	1740	1270	1270	1270
	4.3	**Free-lift**		h_2	mm	-	-	1355	-	-	1355	-	-	-
	4.4	**Lift Height**		h_3+h_{13}	mm	**1670**	**2100**	**2600**	**1670**	**2100**	**2600**	**1670**		
	4.5	**Mast**	extended height	h4	mm	2100	2500	3025	2100	2500	3025	2100		

* as double stacker 1000 kg + 1000 kg, as pallet truck 2000 kg and as stacker 1000 kg
** initial lift lowered + 58 mm
***initial lift lowered – 18 mm

DT 3040-2.0 rear entry fixed platform
mechanical or electric steering

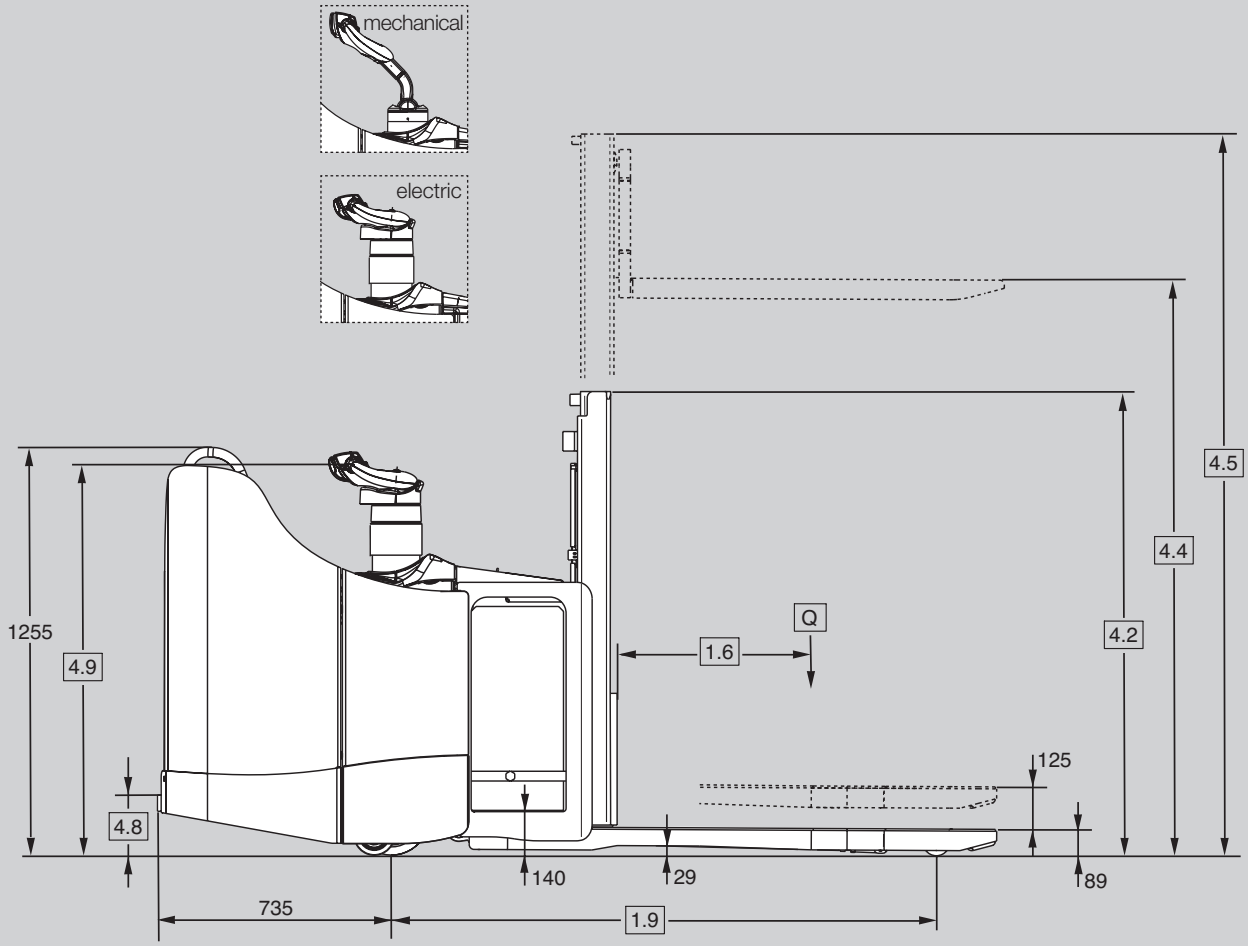

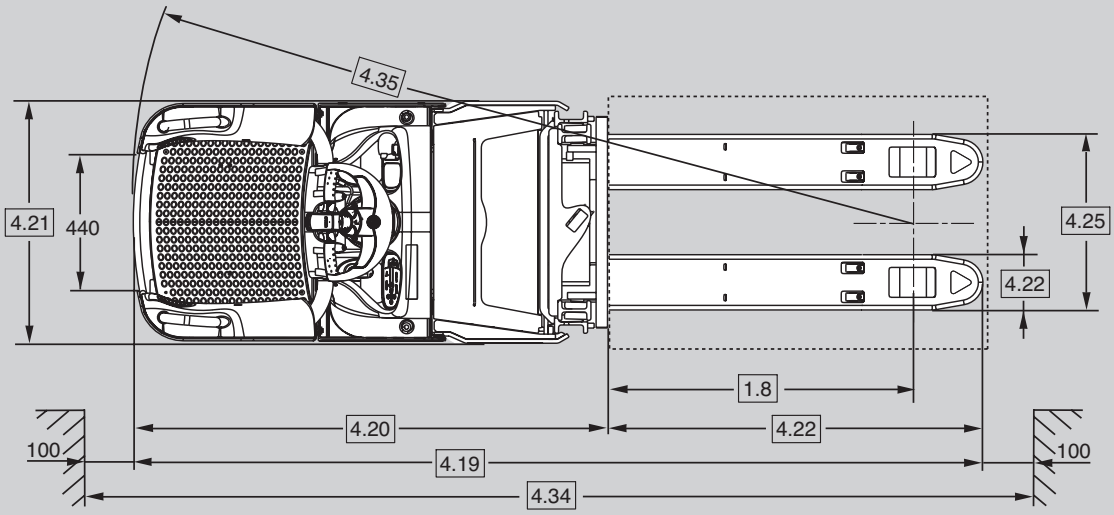

DT 3040-2.0 side entry fixed platform
electric steering

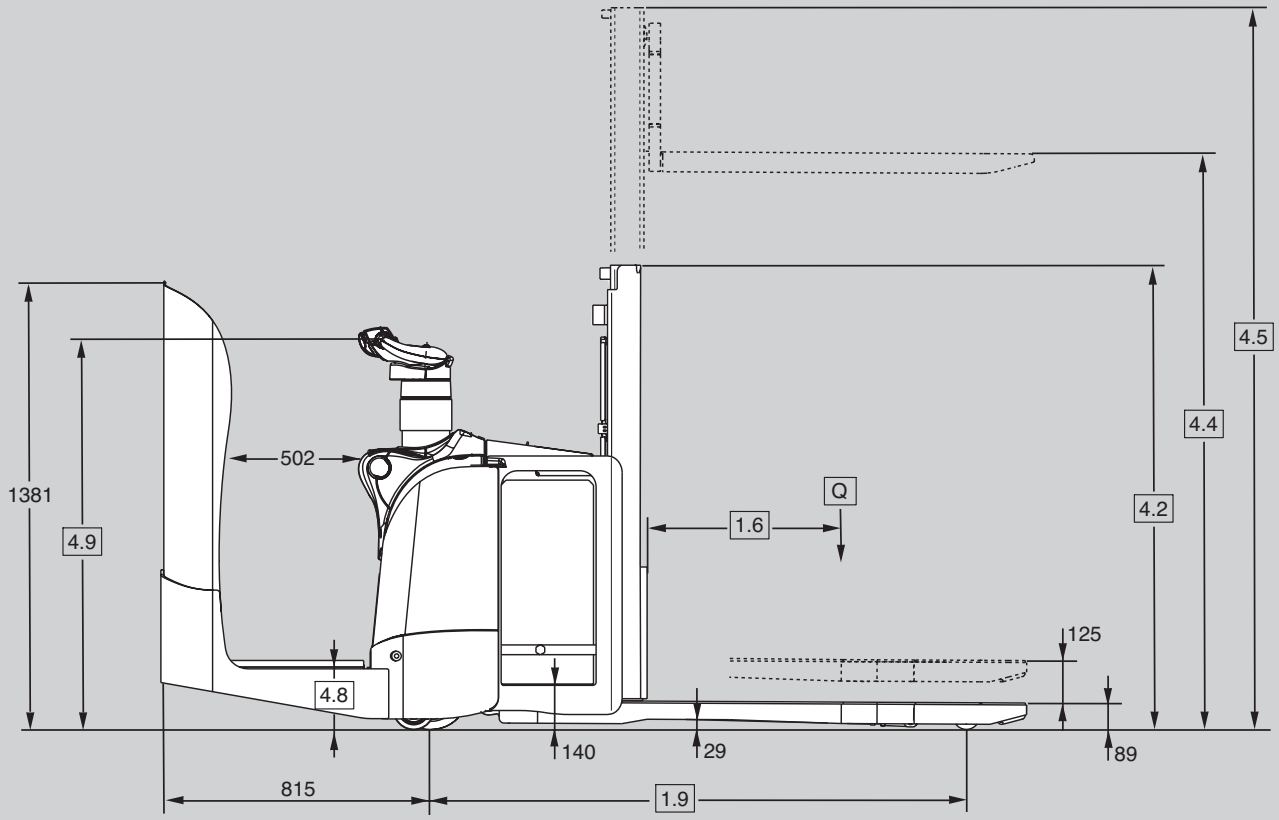

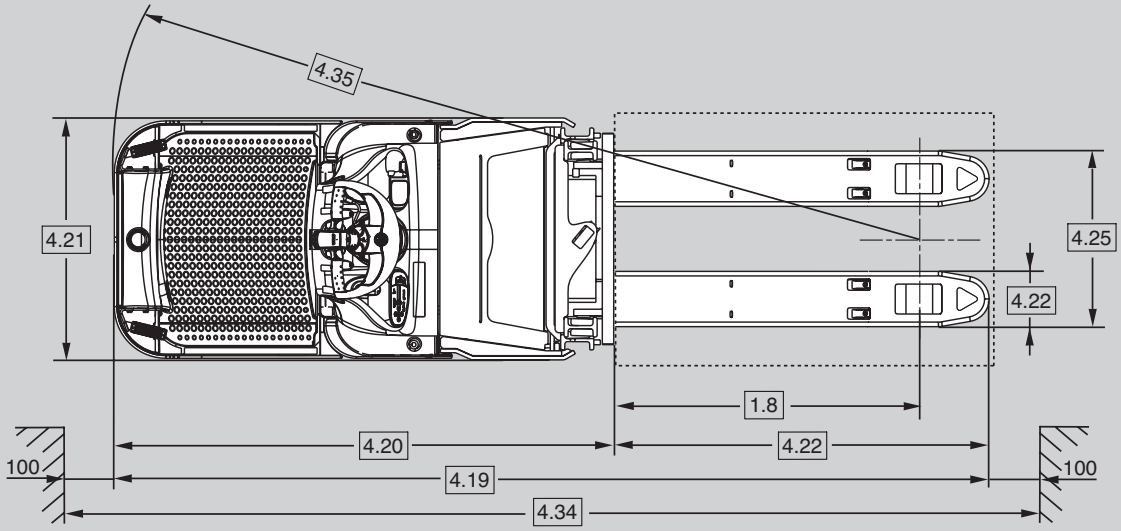

Electric System / Batteries
24-volt electrical system with nominal battery capacities 230 Ah to 375 Ah.

Standard Equipment
1. Maintenance free 3-phase (AC) traction
2. e-GEN® Braking System offers regenerative and frictionless electric braking. Mechanical braking applies only as parking brake
3. The X10® Control Handle places all truck functions at the operator's fingertips
4. Crown Access 1 2 3® Comprehensive System Control
   - LCD display
   - Hour meter
   - Keyless start up with PIN code
   - Start up and run time diagnostics
   - Battery discharge indicator and lift interrupt
   - 3 selectable traction performance profiles
   - On-board diagnostics with real time troubleshooting capabilities
5. FlexRide™ reduces vibrations and shocks to a minimum by combining (foldable platform only)
   - Soft floor mat with integrated presence sensor
   - Advanced platform suspension
   - Fully suspended drive unit
6. CAN-Bus technology
7. Heavy-duty side restraints with soft side pads (foldable platform only)
8. Electric power disconnect switch
9. Vulkollan drive tyre, castor wheels and load wheels
10. Single load wheels
11. Ramp hold
12. Battery connector - DIN 160 A
13. Easily removable steel covers
14. Hinged steel top battery cover for easy battery access
15. Rabbit/turtle switch incorporates two levels of programmable travel performance
16. Proportional lifting/lowering
17. Heavy-duty castor wheels
18. Fully suspended drive unit
19. Soft floor mat with integrated presence sensor (platform trucks only)
20. Pallet stop at initial lift for quick double stacking
21. Battery compartment rollers for horizontal battery removal
22. Polycarbonate mast guard
23. Fork tip indicators

Optional Equipment
1. Without foldable platform
2. Rear entry fixed platform
3. Side entry fixed platform (electric steering only)
4. Weight-adjustable FlexRide™ (rear entry fixed platform only)
5. Intelligent electric Steering System (platform trucks only)
   - Selectable performance profiles for speed reduction in turns
   - Tactile feedback feature analyses operational conditions and adjusts steering force for optimised control
   - Active Traction System adjusts drive tyre pressure as load weight changes
6. Outrigger lift/lower switches on left and right side of X10® Control Handle
7. Battery connector - SBE 160 red
8. Rubber or Supertrac drive tyre
9. Tandem load wheels
10. Heavy-duty dual castor wheels
11. Freezer conditioning
12. InfoLink® Ready
13. Key Switch
14. Keypad (not available with cold store conditioning)
15. Load backrest
16. Work Assist™ accessory tube
17. Work Assist™ Accessories
    - Storage pockets
    - Scan gun holder
    - A4 clip pad
    - Large transparent clip pad
    - Mounting brackets for WMS terminals
18. Special paint
19. Metal mast grill
20. 12 V clean power supply
21. 24 V power supply
22. Welded fork marks
23. Lithium-Ion Battery Ready

Electrical
A heavy-duty 24 volt fused electrical system provides optimum travel and lift speed. Virtually maintenance-free AC traction motor provides strong acceleration and control at any speed.

The DT 3000 Series is equiped with sensors which monitor functional parameters including steering, load weight, height, drive mode and speed, and adjusts operational settings automati cally to suit conditions.

Power Unit
The DT 3000 Series is designed to take the abuse of dock work, the rugged power unit features a reinforced 10 mm thick skirt to protect drive unit and castor components. A 12 mm skirt protects the battery and lift linkage. The contoured skirt provides greater ground clearance for working on ramps. Removable steel covers all around ensure internal components are protected against impacts yet easily accessible for service.

Comfort
The DT 3000 Series incorporates numerous design features to improve operator comfort and productivity.

The folding FlexRide™ platform reduces shock transfer to the operator by more than 80 percent. Dock boards can be crossed without reducing speed. The lifetime platform suspension never requires adjustment and features solid state induction switches to avoid reliability issues caused by contaminants.

Heavy-duty side restraints feature 50 mm heavy-wall steel tubing and rugged C-clamp mounting system. Soft polyurethane side pads are positioned for excellent support and comfort.

The robust side restraints can be easily folded up and down for convenient entry and exit.
Fixed platform models feature a patented Entry Bar Safety Switch which stops the truck if the operator's foot is outside the truck perimeter. Low step height and wide, rounded access make it easy to step on and off the truck. The rear-entry platform incorporates large side cushions for soft support in side-stance position. A contoured lean pad on the side entry platform provides a soft contact surface to lean against.

Patented weight-adjustable FlexRide™ – optional on the rear entry model – provides the ultimate rider comfort by tuning the suspension for the operator's body weight.

Available electric steering improves manoeuvrability and responsiveness, even with heavy loads. An intelligent tactile feedback feature analyses operational conditions and adjusts steering force for greater driver confidence. Combined with Active Traction and speed reduction in turns, electric steering safely delivers top driving performance.

Operator Controls
The X10® Control Handle, designed for simultaneous operation of all functions with one hand, improves side-stance operation for maximum visibility in both driving directions. An ergonomic forward/reverse rocker allows for precise manoeuvring. The hand grips are urethane covered for insulation from cold and vibration with integrated horn buttons for easy activation.

A rabbit/turtle switch incorporates two levels of programmable travel performance so operators can select the setting that matches their experience level or application requirements.

Proportional lift and lowering allows easy and precise positioning of loads. The fast responsiveness and speeds of the lifting and lowering functions are designed to meet the high demanding double stacker applications and all this together at a low noise level.

Access 1 2 3® Comprehensive System Control
Crown's Access 1 2 3 technology provides optimum performance and control by offering a communications interface for the operator and service technician, intelligent coordination of lift truck systems and simplified service with advanced diagnostics.

The display includes a full featured on-board service tool so service technician can actively view inputs and outputs during truck operation. No laptop or service terminal is required. Event code history, including the last 16 events, is accessible through the display.

The display provides a convenient interface for operators, keeping them informed (operational hours, BDI, operator messages, event codes) of any changes impacting truck performance and allowing them to choose from three performance profiles when enabled.

Performance tuning can be accessed at the display to customise truck performance for specific applications or operator requirements. In addition, up to 25 PIN codes can be assigned to individual operators and matched to one of the pre-programmed performance profiles if desired.

Power Unit Suspension
The power unit suspension utilises hard-plated chrome rods and sealed slide bushings for long life without adjustment. The suspension provides 60 mm of travel with constant drive tyre pressure for excellent performance on ramps. The system reduces shocks to the chassis, mounted components and the operator.

Active Traction, standard on trucks with electric steering, uses hydraulic pressure to increase traction. Reduced slipping and improved braking are especially helpful on steep or wet ramps.

e-GEN® Braking System
The power of the high-torque AC traction motor is used to stop the truck and keep it static until a travel input is requested, even when operating on a gradient. This system eliminates adjustments and wear points for a lifetime of maintenance free use.

An automatic parking brake activates if the truck is stopped and the operator leaves the platform or power is disconnected.

Safety Regulations
Conforms to European safety standards.

Dimensions and performance data given may vary due to manufacturing tolerances. Performance is based on an average size vehicle and is affected by weight, condition of truck, how it is equipped and the conditions of the operating area. Crown products and specifications are subject to change without notice.

DT 3000 SPEC GB 12/22, 10
M03386-006-08
Printed in Germany

ISO 9001 Quality Management System certified for the design, development, manufacture, sale and product support of industrial trucks.

European Manufacturing:
Crown Gabelstapler GmbH & Co. KG

Продавец:
kupit-shtabeler.ru
+7 495 159-44-32
zakaz@kupit-shtabeler.ru