**KUPIT-SHTABELER.RU**

# AMEISE PTE 1.5 Li-Ion

## Руководство по эксплуатации серии

Английский, редакция 07.23, № 52364062

Оригинальная инструкция серии PTE 1.5 Li-Ion. Руководство описывает несколько длин вил и батарейных исполнений. Стандартная таблица массы для вил 1150 мм не определяет массу коротких версий 800/1000 мм.

### Контакты продавца

kupit-shtabeler.ru
zakaz@kupit-shtabeler.ru
+7 495 159-44-32

Состав аккумулятора и зарядного устройства сверяют по выбранному исполнению. Ход подъёма вил и их максимальная высота над полом являются разными величинами.

Со следующей страницы сохранены все оригинальные страницы изготовителя в исходном порядке. Технические указания, предупреждения, сведения об изготовителе и импортёре не изменены.

Обложка добавлена продавцом. Этот файл не является заполненным паспортом конкретной единицы, подтверждением её серийного номера, приёмки или сертификации.

# PTE 1.5 Li-Ion

Operating instructions

en-GB

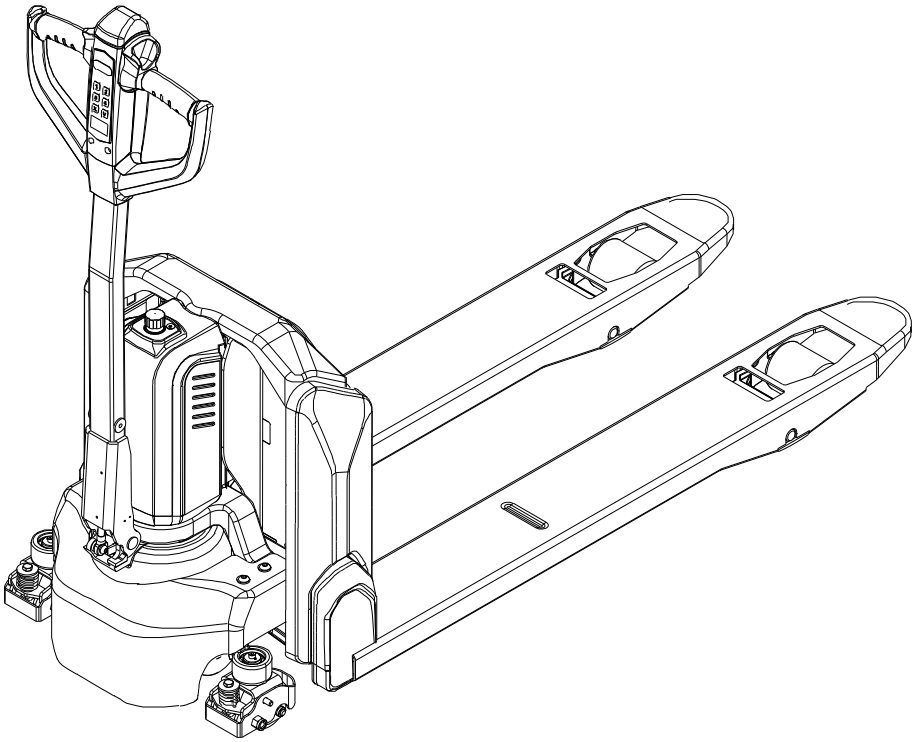

52364062

06.23

07.23

PTE 1.5 Li-Ion

# Declaration of Conformity

**Manufacturer**

Jungheinrich AG, 22039 Hamburg, Germany

| **Description** |
|---|
| **Industrial truck** |

| Type | Option | Serial no. | Year of manufacture |
|---|---|---|---|
| PTE 1.5 Li-Ion | | | |

**On behalf of**

**Date**

**EU DECLARATION OF CONFORMITY**

The undersigned hereby declare that the powered truck described in detail complies with the current versions of European Directives 2006/42/EG (Machinery Directive) and 2014/30/EU (Electromagnetic Compatibility - EMC). The manufacturer is authorised to compile the technical file.

UK CA

JUNGHEINRICH

**Declaration of Conformity (○)**

| | |
|---|---|
| **Product:** | PTE 1.5 Li-Ion<br>Serial number/type number |
| **Manufacturer:** | Jungheinrich Aktiengesellschaft<br>22039 Hamburg, Germany |
| **UK representative:** | Jungheinrich UK Ltd<br>Sherbourne House<br>Sherbourne Drive<br>Tilbrook<br>Milton Keynes<br>MK7 8HX |

**Authorised to compile documentation:**

The manufacturer is authorised to compile the technical documentation and its representative is authorised to make documentation available upon reasoned request for a period of at least 10 years from the date of first placement of the product on the UK market.

The manufacturer bears sole responsibility for issuance of this Declaration of Conformity.

The subject of the Declaration as outlined above satisfies the applicable UK legislation:

**Supply of Machinery (Safety) Regulations 2008 No. 1597**

and

**Electromagnetic Compatibility Regulations 2016 No. 1091**

Signed for and on behalf of:

**Jungheinrich Aktiengesellschaft**

07.23 en-GB

# Foreword

## Notes on the operating instructions

The present ORIGINAL OPERATING INSTRUCTIONS are designed to provide sufficient instruction for the safe operation of the industrial truck. The information is presented in a precise and clear manner. The chapters are arranged by letter and the pages are numbered continuously.

The operating instructions detail different industrial truck models. When operating and checking the industrial truck, make sure that the particular section applies to your truck model.

Our industrial trucks are subject to ongoing development. We reserve the right to alter the design, features and technical aspects of the equipment. No guarantee of particular features of the equipment should therefore be assumed from the present operating instructions.

## Safety notices and text mark-ups

Safety instructions and important explanations are indicated by the following graphics:

**⚠ DANGER!**

Indicates an extremely hazardous situation. Failure to comply with this instruction will result in severe irreparable injury and even death.

**⚠ WARNING!**

Indicates an extremely hazardous situation. Failure to comply with this instruction may result in severe irreparable injury and even death.

**⚠ CAUTION!**

Indicates a hazardous situation. Failure to comply with this instruction may result in slight to medium injury.

***NOTICE***

Indicates a material hazard. Failure to comply with this instruction may result in material damage.

➔ Used before notices and explanations.

| | |
|---|---|
| ● | Indicates standard equipment |
| ○ | Indicates optional equipment |

**Copyright**

Copyright of these operating instructions remains with JUNGHEINRICH AG.

**Jungheinrich Aktiengesellschaft**

Friedrich-Ebert-Damm 129
22047 Hamburg - Germany

Tel: +49 (0) 40/6948-0

www.jungheinrich.com

# Contents


A Correct Use and Application ... 11

1 General ... 11
2 Correct application ... 11
3 Approved application conditions ... 12
4 Proprietor responsibilities ... 12
5 Adding attachments and/or optional equipment ... 13
6 Removal of components ... 13
7 Wind loads ... 13

B Truck Description ... 15

1 Application ... 15
2 Truck models and rated capacity ... 15
3 Travel direction definition ... 16
4 Assemblies and Functional Description ... 17
4.1 Assembly Overview ... 17
4.2 Functional Description ... 18
5 Technical Specifications ... 20
5.1 Dimensions ... 20
5.2 Performance data ... 21
5.3 Battery ... 22
5.4 Battery charger ... 22
5.5 Weights ... 22
5.6 Tyre type ... 22
5.7 EN norms ... 23
5.8 Electrical Requirements ... 23
6 Identification Points and Data Plates ... 24
6.1 Data plate ... 25

C Transport and Commissioning ... 27

1 Lifting by crane ... 27
2 Transport ... 29
3 Using the Truck for the First Time ... 30
4 Changing the Access Code ... 31
5 Assembling the tiller ... 32

D Battery - Servicing, Recharging, Replacement ... 35

1 Description of the lithium-ion battery ... 35
2 Battery Decals ... 36
2.1 Battery data plate ... 37
2.2 Battery serial number ... 37
3 Safety Instructions, Warning Indications and other Notes ... 38
3.1 Safety regulations for handling lithium-ion batteries ... 38
3.2 Potential hazards ... 40
3.3 Battery lifetime and maintenance ... 46
3.4 Charging the battery ... 47
3.5 Storage / safe handling / faults ... 48
3.6 Disposal and transport of a lithium-ion battery ... 49

4 Charging the battery ... 52
4.1 Correct Use and Application ... 52
4.2 Charge Status Indicator ... 53
4.3 Charging the Battery with External Charger ... 54
5 Removing or installing the battery ... 56
5.1 Removing the battery ... 56
5.2 Battery installation ... 57

E Operation ... 59

1 Safety Regulations for the Operation of Forklift Trucks ... 59
2 Displays and Controls ... 61
2.1 Controls ... 61
2.2 Display symbols ... 63
3 Starting up the truck ... 64
3.1 Checks and operations to be performed before starting daily operation 64
3.2 Preparing the truck for operation ... 65
3.3 Parking the truck securely ... 66
4 Working with the truck ... 68
4.1 Safety regulations for travel mode ... 68
4.2 Emergency Disconnect ... 70
4.3 Brakes ... 71
4.4 Travel ... 73
4.5 Slow travel ... 74
4.6 Steering ... 75
4.7 Lifting, transporting and depositing loads ... 76
5 Troubleshooting ... 80
6 Moving a truck without its own drive system ... 82

F Truck maintenance ... 83

1 Spare Parts ... 83
2 Operational Safety and Environmental Protection ... 84
3 Maintenance Safety Regulations ... 85
3.1 Working on the electrical system ... 85
3.2 Consumables and used parts ... 86
3.3 Wheels ... 86
3.4 Hydraulic system ... 86
3.5 Energy saving components ... 86
4 Lubricants and Lubrication Schedule ... 87
4.1 Handling consumables safely ... 87
4.2 Lubrication Schedule ... 88
4.3 Consumables ... 89
5 Maintenance and repairs ... 90
5.1 Preparing the truck for maintenance and repair work ... 90
5.2 Lifting and jacking up the truck safely ... 91
5.3 Disassembling or assembling the cover ... 93
5.4 Cleaning ... 95
5.5 Checking the drive wheel and load wheels ... 97
5.6 Checking the hydraulic oil level and refilling the hydraulic oil ... 98
5.7 Checking the electrical fuses ... 99
6 Restoring the truck to service after maintenance and repairs ... 100
7 Decommissioning the industrial truck ... 100
7.1 Prior to decommissioning ... 100

7.2 Action to be taken during decommissioning ..... 101
7.3 Restoring the truck to service after decommissioning ..... 101
8 Safety tests to be performed at intervals and after unusual incidents ..... 101
9 Final de-commissioning, disposal ..... 101

G Maintenance, Inspection and Changing of Maintenance Parts Requiring Replacement ..... 103

1 Maintenance Contents PTE 1.5 Li-Ion ..... 104
1.1 Owner ..... 104
1.2 Customer Service ..... 104

# A Correct Use and Application

## 1 General

The truck must be used, operated and serviced in accordance with these operating instructions. All other types of use are beyond its scope of application and may result in damage to persons, material assets and/or the truck.

## 2 Correct application

***NOTICE***

The maximum load and load distance are indicated on the capacity plate and must not be exceeded.
The load must rest on the load handler.
The load must be fully raised, see page 76.

---

The following operations are in accordance with regulations and are permitted:
– Lifting and lowering loads.
– Transporting lowered loads.

The following operations are prohibited:
– Carrying and lifting passengers.
– Pushing or pulling loads.

# 3 Approved application conditions

**⚠ WARNING!**

**Use under extreme conditions**

Using the truck under extreme conditions can result in malfunctions and accidents.

▶ Special equipment and authorisation are required if the truck is to be constantly used in extreme conditions, especially in dusty or corrosive atmospheres.

▶ The truck cannot be used in areas at risk of explosion.

▶ In adverse weather conditions (thunder, lightning) the industrial truck must not be operated outside or in endangered areas.

- Operation in industrial and commercial environments.
- Minimum temperature for brief outdoor use (max. 30 minutes): -20 °C
- Use only on secure surfaces with sufficient capacity.
- Do not exceed the permissible surface and point load limits on the travel paths.
- Use only on travel paths that are visible and approved by the operating company.
- Slopes of max. 4 % may be negotiated with load, and 16 % without load.
- Do not travel across or at an angle on inclines. Travel with the load facing uphill.
- Use indoors and outdoors
- Temperature range: +5 °C to +40 °C
- Minimum illumination level of the traffic lanes 50 Lux.

# 4 Proprietor responsibilities

For the purposes of the present operating instructions the “operating company” is defined as any natural or legal person who either uses the industrial truck himself, or on whose behalf it is used. In special cases (e.g. leasing or renting) the proprietor is considered the person who, in accordance with existing contractual agreements between the owner and user of the industrial truck, is charged with operational duties.

The proprietor must ensure that the industrial truck is used only for the purpose it is intended for and that danger to life and limb of the user and third parties are excluded. Furthermore, accident prevention regulations, safety regulations and operating, servicing and repair guidelines must be followed. The operating company must ensure that all users have read and understood these operating instructions.

***NOTICE***

Failure to comply with the operating instructions invalidates the warranty. The same applies if improper work is carried out on the truck by the customer or third parties without the permission of the manufacturer.

# 5 Adding attachments and/or optional equipment

The mounting or installation of additional equipment which affects or enhances the performance of the industrial truck requires the written permission of the manufacturer. Local authority approval may also need to be obtained.
Local authority approval however does not constitute the manufacturer’s approval.

# 6 Removal of components

It is forbidden to modify or remove truck components, particularly protective and safety equipment.

➔ If in doubt, contact the manufacturer's customer service department.

# 7 Wind loads

Wind forces can affect the stability of a truck when lifting, lowering and transporting loads with large surface areas.

Light loads must be especially secured when they are subjected to wind forces. This will prevent the load from sliding or falling.

Stop the truck in both cases.

# B Truck Description

## 1 Application

The PTE 1.5 Li-Ion is designed to transport goods. It can lift open-bottom or stringer-board pallets beyond the area above the load wheels, as well as roll cages. The capacity is shown on the capacity plate, Qmax.

➔ The industrial truck is designed for light-duty operations; the maximum continuous operation time is 4 hours.

## 2 Truck models and rated capacity

The rated capacity can be derived from the model name.

PTE 1.5 Li-Ion: 1500 kg

The rated capacity does not generally match the permissible capacity. The capacity can be found on the capacity plate attached to the truck.

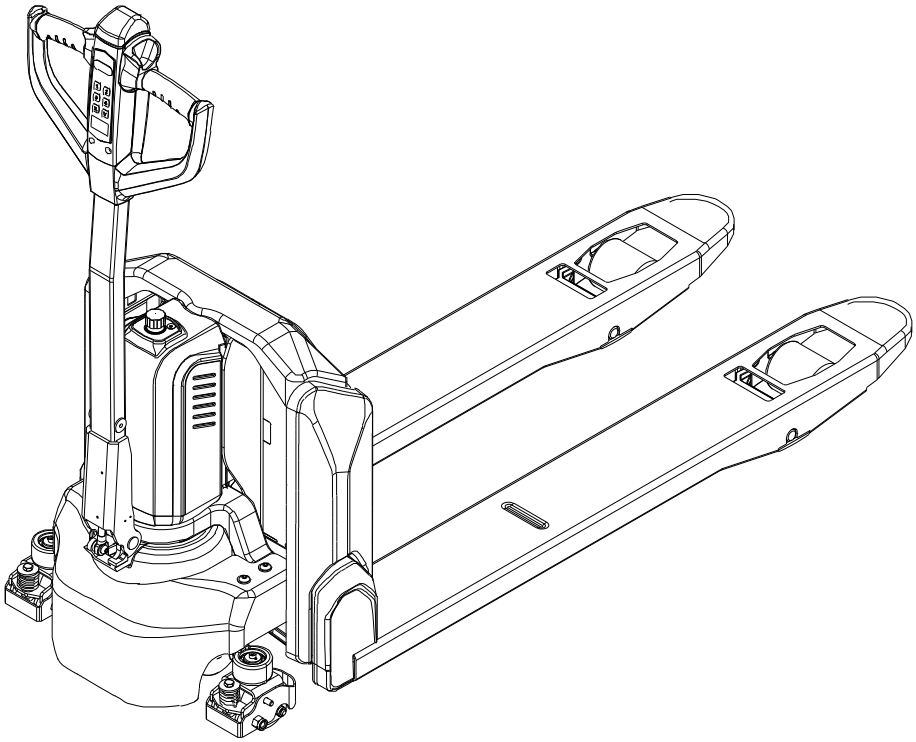

# 3 Travel direction definition

The following determinations have been made for travel direction specification:

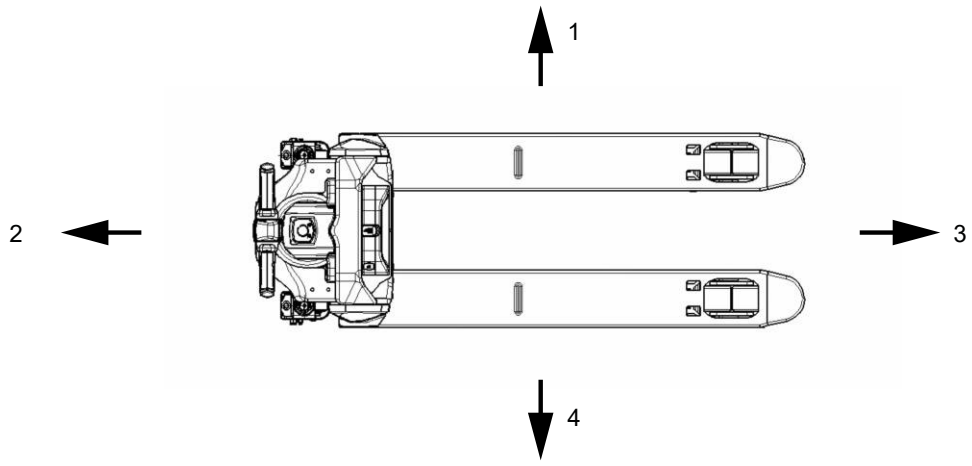


| Item | Description |
|---|---|
| 1 | Left |
| 2 | Drive direction |
| 3 | Load direction |
| 4 | Right |

# 4 Assemblies and Functional Description

## 4.1 Assembly Overview

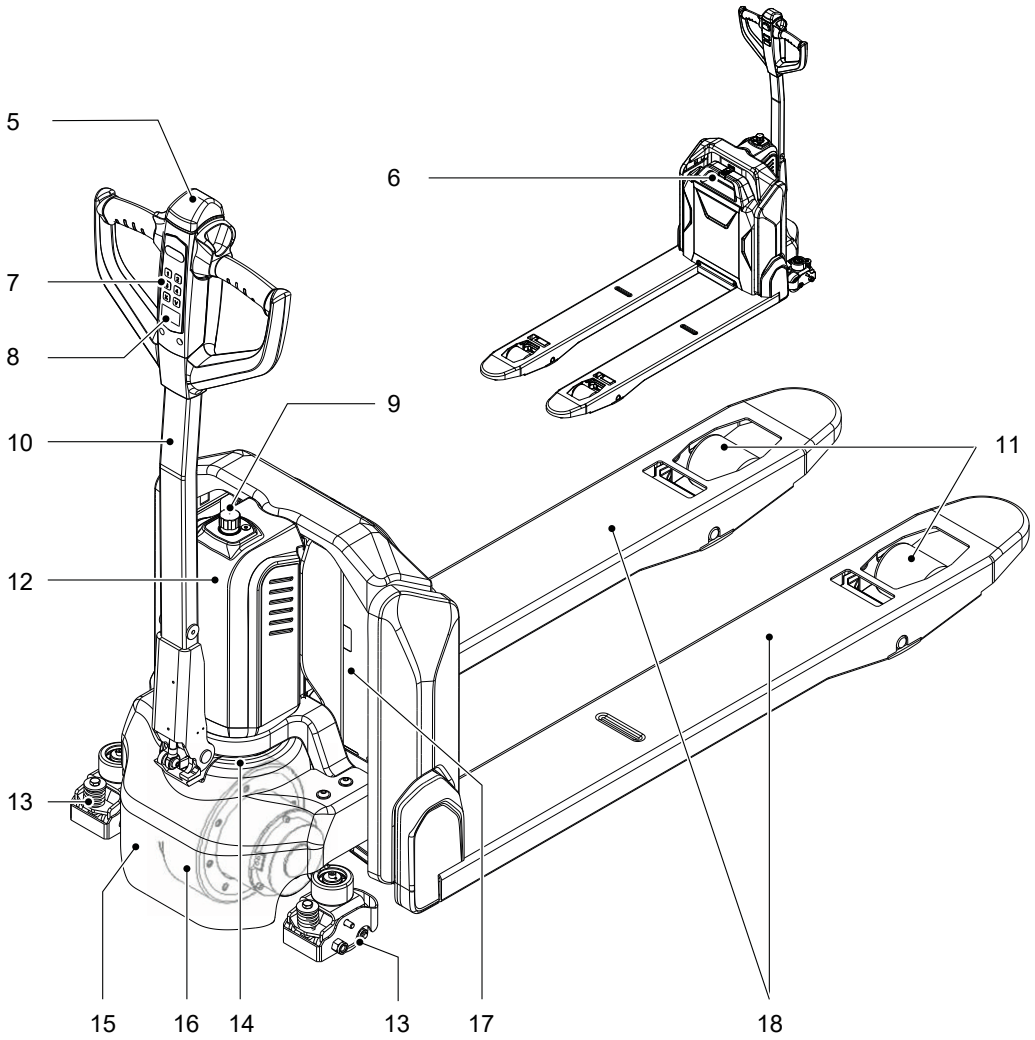


| Item | Description | Item | Description |
|---|---|---|---|
| 5 | Collision safety switch | 12 | Cover for the hydraulic unit and electrical system |
| 6 | Battery | 13 | Support wheel |
| 7 | Keypad | 14 | Drive unit |
| 8 | Display unit | 15 | Bumper |
| 9 | Emergency disconnect switch | 16 | Drive wheel |
| 10 | Tiller | 17 | Load section |
| 11 | Load wheels | 18 | Load handler |

## 4.2 Functional Description

### PTE 1.5 Li-Ion: Keypad

The truck is equipped with a keypad. The truck can only be started if the correct access code is entered via the keypad. This prevents any unauthorised use of the truck.

### Safety equipment

An enclosed, smooth truck geometry with rounded edges ensures safe handling of the truck. The wheels are surrounded by a solid skirt offering collision protection.

When released, a gas strut pushes the tiller up and activates braking.

When travelling in the drive direction in pedestrian mode, the red collision safety switch changes the travel direction if the truck comes into contact with a person. The truck brakes, travels away from the operator and stops. This prevents the truck driving into the operator.

Activating the emergency disconnect switch rapidly cuts out all electrical functions in hazardous situations.

### Emergency disconnect switch

The truck is equipped with an emergency disconnect switch. When it is pressed, all lifting and lowering operations are stopped and the fail-safe electromagnetic brake is activated, see page 70.

### Operator position

All travel and lift operations can be performed without having to reach.

### Hydraulische Anlage

Pressing the “Lift” button starts the pump unit, supplying hydraulic oil from the oil reservoir to the lift cylinder. The load handler is raised at even speed. Pressing the “Lower” button lowers the load handler.

### Drive system

An electric motor actuates the drive wheel directly. The electric traction controller ensures smooth drive motor speed control and hence smooth travel, powerful acceleration and electrically controlled braking.

### Steering

The driver steers with an ergonomic tiller. The drive system can be pivoted +/- 90°.

### Electrical system

The truck has an electronic traction controller. The truck electrical system operates with a rated operating voltage of 24 V.

### Control and display elements

Ergonomic controls ensure fatigue-free operation for sensitive application of the travel and hydraulic operations.

The display unit shows the operator key information such as operating hours, battery charge status and event messages.

Service hours are counted while the truck is operational and one of the following operations is performed:
– Lifting
– Lowering
– Travel

# 5 Technical Specifications

➔ Technical data specified in accordance with VDI 2198.
Technical modifications and additions reserved.

## 5.1 Dimensions

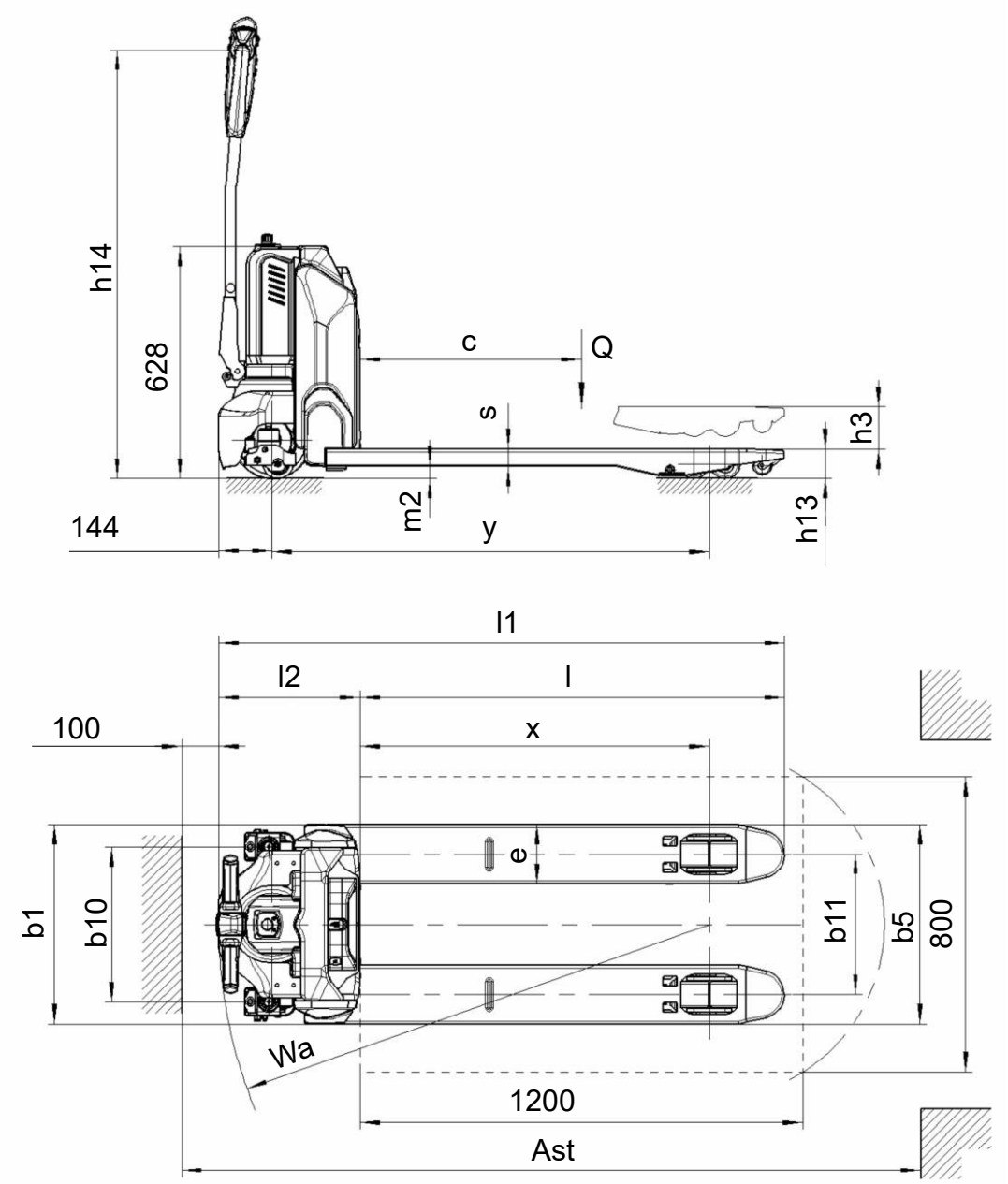

| | Description | PTE 1.5 Li-Ion | | |
|---|---|---|---|---|
| | | 540 x l | 685 x l | |
| c | Load centre distance with standard fork length | 600 | | mm |
| x | Load distance | 947 | | mm |
| y | Wheelbase | 1185 | | mm |
| b10 | Track width, front | 420 | | mm |
| b11 | Track width, rear | 380 | 525 | mm |
| h3 | Lift | 115 | | mm |
| h14 | Tiller height in the travel position min./ max. | 700 / 1160 | | mm |
| h13 | Load handler lowered | 80 | | mm |
| l1 | Overall length | 1530 | | mm |
| l2 | Length to fork shank | 380 | | mm |
| b1 | Fork width | 540 | 685 | mm |
| s/e | Fork cross-section | 47 / 160 | | mm |
| l | Fork length (3 versions) | 800; 1000; 1150 | | mm |
| b5 | Width across forks | 540 | 685 | mm |
| m2 | Ground clearance, centre of wheelbase | 33 | | mm |
| Ast | Working aisle width, pallets 800x1200 length | 2000 | | mm |
| Wa | Turning radius | 1330 | | mm |

## 5.2 Performance data

| Description | PTE 1.5 Li-Ion | |
|---|---|---|
| Rated capacity Q | 1500 | kg |
| Travel speed<br>with / without rated load | 4.6 / 4.8 | km/h |
| Lift speed<br>with / without rated load | 0.020 / 0.025 | m/s |
| Lowering speed<br>with / without rated load | 0.05 / 0.04 | m/s |
| Drive motor, output S2 60min | 0.65 | kW |
| Lift motor, output at S3 15 % | 0.5 | kW |
| Max. gradeability<br>with / without rated load | 4 / 16 | % |

## 5.3 Battery

The battery used in this truck is a lithium-ion model. This is an environmentally friendly battery without chemical mercury or cadmium.

The truck must only be operated with an approved lithium-ion battery.

| **Technical parameter** | **Battery specification** | |
|---|---|---|
| | **24 V 20 Ah** | **24 V 36 Ah** |
| Nominal voltage | 24 V | |
| Rated capacity [1)] | 20 Ah | 36 Ah |
| Weight | 5,0 kg | 7,0 kg |
| Dimensions | 380 x 250 x 71 mm | |
| Standard charging current | 5 A | 8 A |
| Charging temperature | +5 °C to +40 °C | |
| Discharge temperature | -20°C [1)] to +50°C | |
| Storage temperature range | 0 °C to +30 °C | |

[1)] Briefly up to 30 minutes

## 5.4 Battery charger

| **Model** | **Specification** | **Input** | **Output** |
|---|---|---|---|
| SSLC300V29 | 24 V<br>8 A (EU) | 180 V AC - 240 V AC<br>~ 3.0 A max | 29.4 V<br>8.0 A |

The permissible temperature range for charging the battery is between +5 °C and +40 °C.

## 5.5 Weights

| **Description** | **PTE 1.5 Li-Ion** | | |
|---|---|---|---|
| | **540 x 1150** | **685 x 1150** | |
| Net weight | 123 | 126 | kg |
| Axle load, laden front/rear | 623 / 1000 | 626 / 1000 | kg |
| Axle load without load front/rear | 96 / 27 | 99 / 27 | kg |

## 5.6 Tyre type

| **Description** | **PTE 1.5 Li-Ion** | |
|---|---|---|
| Tyre size, front | ø 210 x 70 | mm |
| Tyre size, rear | ø 80 x 93; ø 80 x 70 | mm |
| Additional wheels (dimensions) | ø 80 x 30 | mm |
| Wheels<br>Number front / rear (x = driven) | 1x / 2(1x/4) or<br>1x +2 / 2(x +2/4) | |

## 5.7 EN norms

**Continuous sound pressure level**

– PTE 1.5 Li-Ion: < 70 dB(A)

in accordance with EN 12053 as harmonised with ISO 4871.

➔ The continuous sound pressure level is calculated according to standard procedures and takes into account the sound pressure level when travelling, lifting and idling. The sound pressure level is measured at the operator's ear.

➔ Noise levels can fluctuate depending on the floor composition and wheel lining.

**Electromagnetic compatibility (EMC)**

The manufacturer confirms that the truck adheres to the limits for electromagnetic emissions and resistance as well as the static electricity discharge test in accordance with EN 12895 as well as the standardised instructions contained therein.

➔ No changes to electric or electronic components or their arrangement may be made without the written agreement of the manufacturer.

**⚠ WARNING!**

**Damage to medical equipment due to non-ionising radiation**

Electrical equipment on the truck emitting non-ionising radiation (e.g. wireless data transmission) can affect operators' medical equipment (pacemakers, hearing aids etc.) and result in malfunctions.

▶ Consult a doctor or the manufacturer of the medical equipment to clarify whether the medical equipment can be used near the industrial truck.

## 5.8 Electrical Requirements

The manufacturer certifies compliance with the requirements for the design and manufacture of electrical equipment, according to EN 1175 "Industrial Truck Safety - Electrical Requirements", provided the truck is used according to its purpose.

# 6 Identification Points and Data Plates

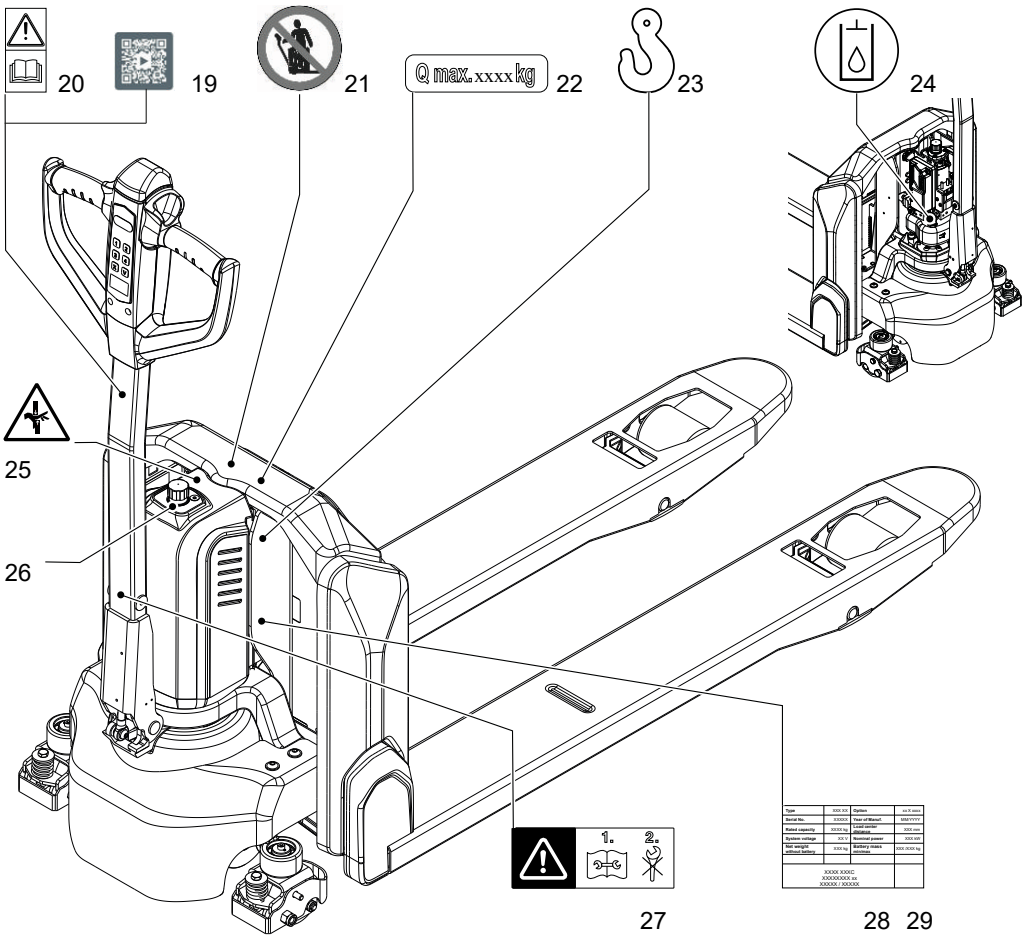


| Item | Description |
|---|---|
| 19 | Information sign "QR-code"<br>➔ The QR code contains a short online video on the basic functions of the truck. |
| 20 | Information sign: "Observe operating instructions" |
| 21 | Prohibition plate: "No passengers" |
| 22 | Truck capacity plate |
| 23 | Attachment point for loading by crane |
| 24 | Oil filling |
| 25 | Warning notice: "Trapping hazard" |
| 26 | "Emergency disconnect switch" marking |
| 27 | Repair notice |
| 28 | Data plate |
| 29 | Punched serial number |

## 6.1 Data plate

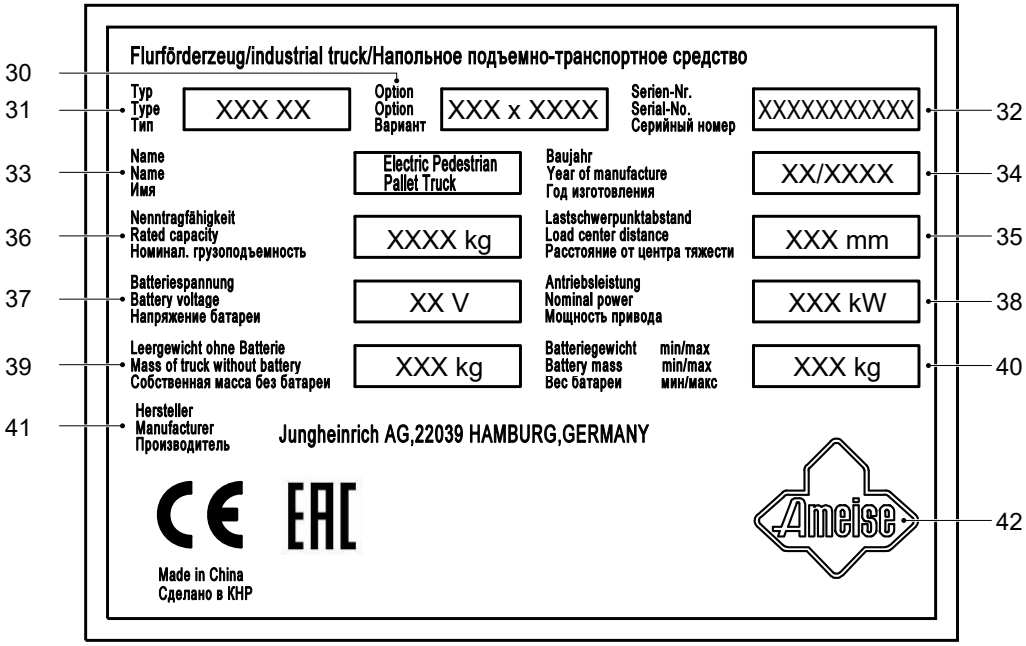


| Item | Description | Item | Description |
|---|---|---|---|
| 30 | Option | 37 | Battery voltage |
| 31 | Type | 38 | Nominal power |
| 32 | Serial number | 39 | Mass of truck without battery |
| 33 | Name | 40 | Battery mass |
| 34 | Year of manufacture | 41 | Manufacturer |
| 35 | Load centre distance | 42 | Logo |
| 36 | Rated capacity | | |

➔ For queries regarding the industrial truck or ordering spare parts always quote the truck serial number (32).

➔ For queries regarding the truck or when ordering spare parts, always quote the serial number (32).

➔ The illustration shows the standard version for EU member states. The data plate may differ in other countries.

# C Transport and Commissioning

## 1 Lifting by crane

**⚠ WARNING!**

**All persons involved in loading by crane must be trained**

Incorrect crane loading procedures due to untrained personnel can cause the truck to fall. There is a risk of injury to personnel and a risk of material damage to the truck.

▶ Loading must only be performed by specialist personnel trained for this purpose. The specialist personnel must be instructed in securing loads on road vehicles and handling load securing devices. In each case correct measurements must be taken and appropriate safety measures applied.

---

**⚠ WARNING!**

**Improper loading by crane can result in accidents**

Improper use or use of unsuitable lifting gear can cause the truck to fall when being loaded by crane.

▶ Prevent the truck from hitting other objects during lifting, and avoid uncontrolled movements. If necessary, secure the truck with guide ropes.

▶ Loading by crane may only be performed by persons who have been trained in the use of the lifting accessories.

▶ Wear personal protective equipment (e.g. safety shoes, hard hat, hi-vis jacket, protective gloves) when loading by crane.

▶ Do not stand under suspended loads.

▶ Do not enter or stand in the hazardous area.

▶ Always use lifting gear with sufficient capacity (observed truck weight in accordance with truck data plate – see page 25).

▶ Always secure crane lifting gear to the prescribed attachment points and prevent it from slipping.

▶ Use the lifting accessories only in the prescribed load direction.

▶ Lifting slings should be fastened in such a way that they do not come into contact with any attachments when lifting.

---

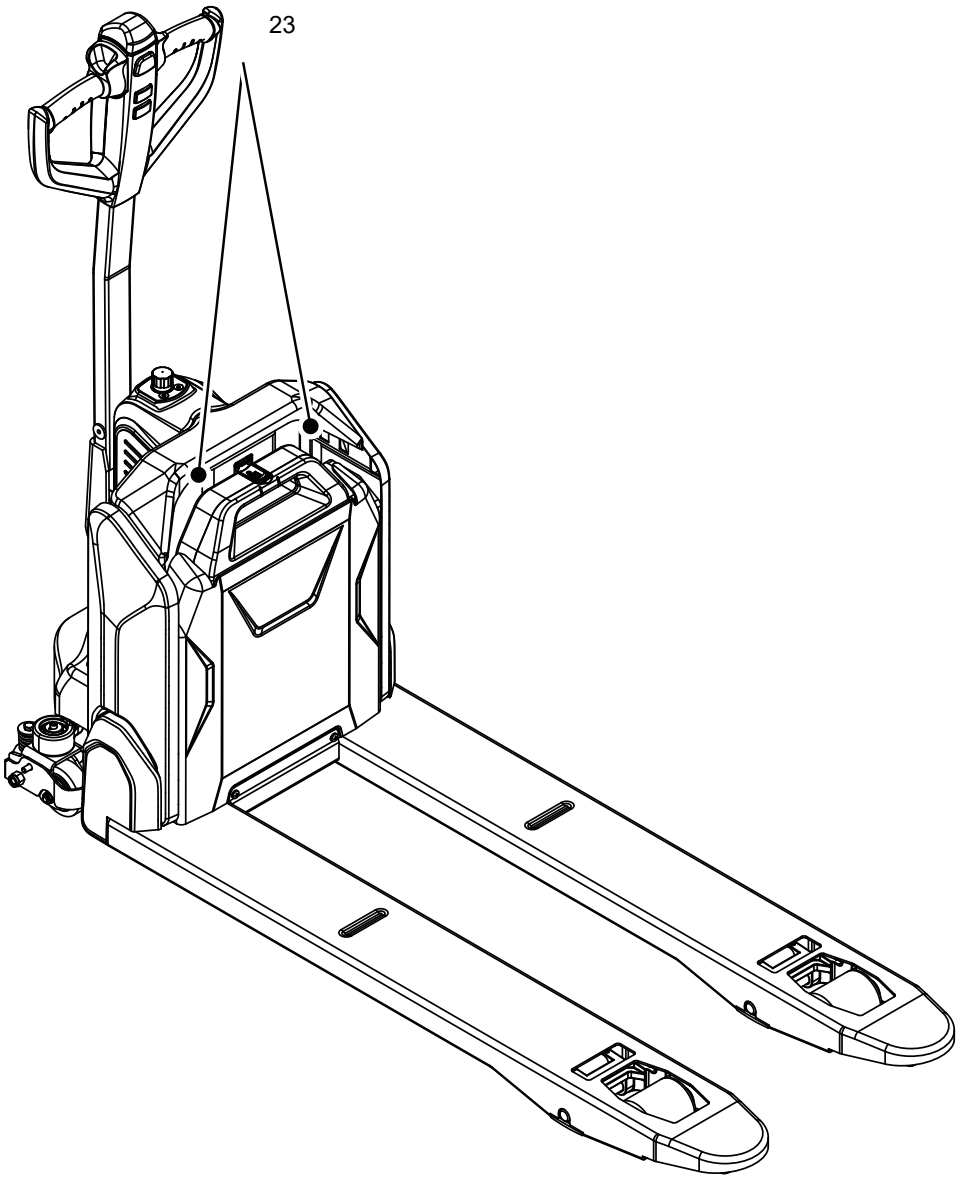


***Loading the truck by crane***

*Requirements*

– Truck parked securely, see page 66.

*Tools and Material Required*

– Lifting gear
– Crane lifting gear

*Procedure*

• Attach the crane lifting gear to the attachment points (23).

*The truck can now be loaded by crane.*

# 2 Transport

**⚠ WARNING!**

**Uncontrolled movement during transport**

Improper fastening of the truck and mast during transport can result in serious accidents.

▶ Loading is only to be carried out by specially trained staff. The specialist personnel must be instructed in the securing of loads on road vehicles and in the use of load-securing equipment. When securing the truck, the appropriate measures must be determined and applied for each individual case.

▶ The truck must be securely fastened when transported on a lorry or a trailer.

▶ The lorry or trailer must have lashing rings.

▶ Use wedges to prevent the truck from moving.

▶ Use only lashing straps with sufficient load rating.

▶ Use anti-slip material to secure loading aids (pallets, wedges,...), e. g. anti-slip mats.

---

***Securing the truck for transport***

*Requirements*

– The truck is now loaded.
– Truck parked securely – see page 66.

*Tools and Material Required*

– Lashing straps

*Procedure*

• Attach the lashing straps (43) to the truck, strap them to the transport vehicle and tension sufficiently.

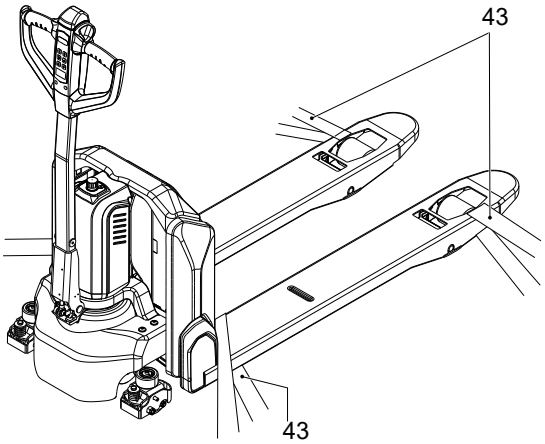


*The truck can be transported.*

# 3 Using the Truck for the First Time

**⚠ WARNING!**

**The use of unsuitable energy sources can be hazardous**

Rectified AC current will damage the assemblies (controllers, sensors, motors etc.) of the electronic system.
Unsuitable cable connections (too long, insufficient wire cross-section) to the battery (tow cables) can overheat, setting the truck and battery on fire.

▶The truck must only be operated with battery current.

*Procedure*

- Check the truck for completeness, see page 17.
- Check the tiller, see page 32.
  - If the tiller is fitted: verify correct assembly of all electrical and mechanical components.
  - If the tiller was supplied separately: Fit the tiller.
- Insert the battery, see page 56.
- Check the battery charge status, see page 52.
- Visual inspections and operations to be performed before starting daily operation, see page 64.

*The truck can now be started,* see page 64.

### Wheel flattening

If the truck has been parked for a long period, the wheel surfaces may tend to flatten. This flattening has a negative effect on the safety and stability of the truck. Once the truck has covered a certain distance, the flattening will disappear.

# 4 Changing the Access Code

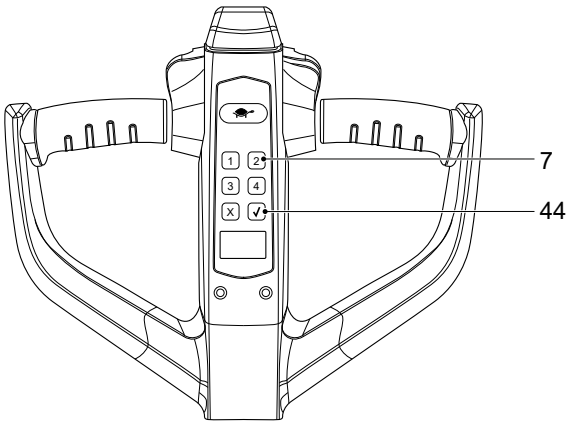


➔ The truck can only be started with the correct access code.

The truck is delivered with the access code 1234, which can be used for immediate start. A new access code can be generated using the administrator password 3232. The code is entered via the keypad (7).

***Changing the access code***

*Requirements*

– The truck is parked securely, see page 66.

*Procedure*

- Enter access code 3232 and press the RETURN key (44).
- Enter the previous access code and press the RETURN key.
- Enter the new access code and press the RETURN key.

*The access code has been changed.*

***Resetting the access code***

*Requirements*

– The truck is parked securely, see page 66.

*Procedure*

- Enter access code 123 and press the RETURN key.
- Enter access code 123 once more and press the RETURN key.

*The access code has been reset to 1234.*

# 5 Assembling the tiller

➔ If the tiller is supplied separately, the tiller must be installed by authorised and trained personnel prior to commissioning.

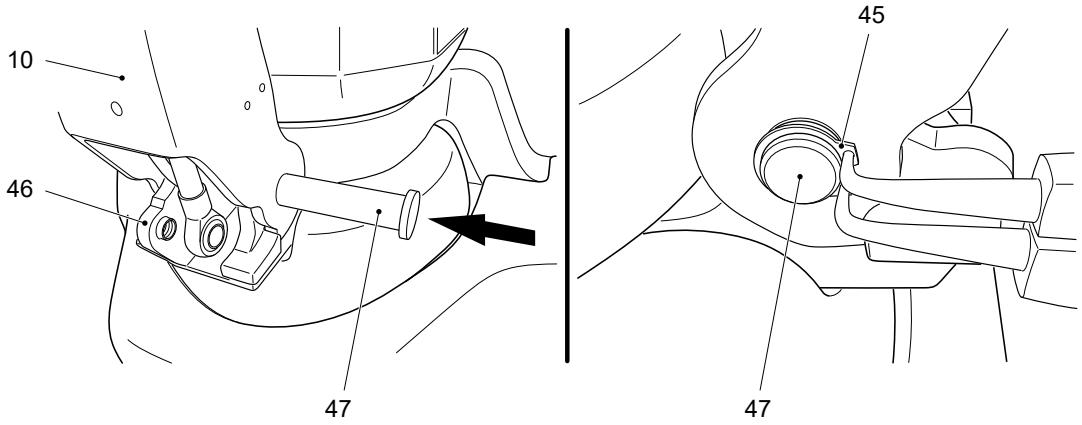


***Fitting the tiller***

*Requirements*

– The truck is parked securely, see page 66.

*Tools and Material Required*

– Circlip pliers
– Tyre lever
– Screwdriver, PH2
– The following materials are supplied with the truck:
– King pin (47)
– Retaining ring (45)

*Procedure*

- Position the tiller (10) vertically to the tiller mount (46) and fit the king pin (47).
- Secure the tiller in this vertical position until the gas strut has been fitted.
- Fit the retaining ring (45).

*The tiller has been fitted and is ready for the gas strut assembly.*

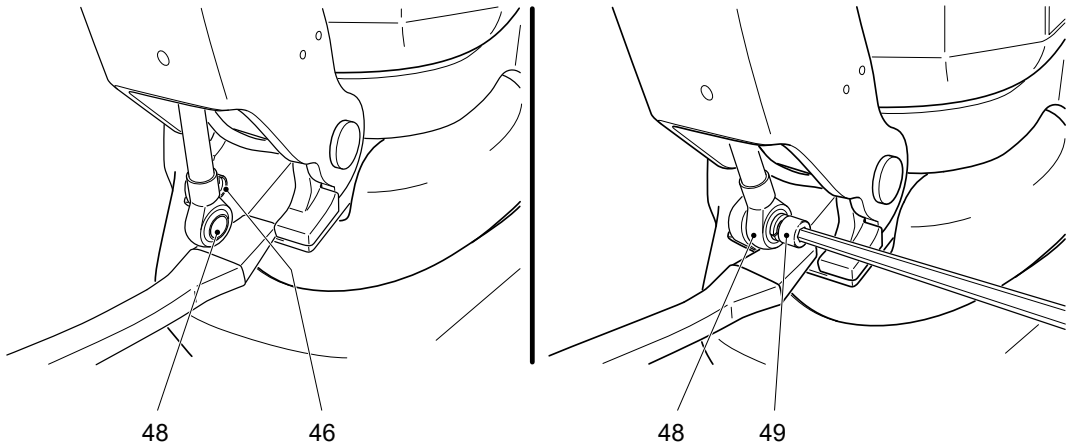


***Fitting the gas strut***

*Requirements*

– Tiller has been fitted.

*Tools and Material Required*

– Allen key, key width 6 mm
– Tyre lever
– Screwdriver, PH2
– The following materials are supplied with the truck:
– Screw and washer for gas strut (49)

*Procedure*

- Use the tyre lever and the screwdriver to position the strut (48) such that the hole on the strut (48) is aligned with the threaded hole on the tiller mount (46).

➔ Risk of trapping: The gas strut is placed under tension during this process. Hold the gas strut in this position until final assembly.

- Fit the gas strut with the screw and washer such that the front face of the screw thread is flush with the outside of the tiller mount.
- Press the tiller down and check for freedom of movement.
- Test the function of the gas strut.

➔ When the tiller is released, the gas strut must return the tiller to its vertical position.

*The gas strut has been fitted. The electrical connection of the tiller can be established.*

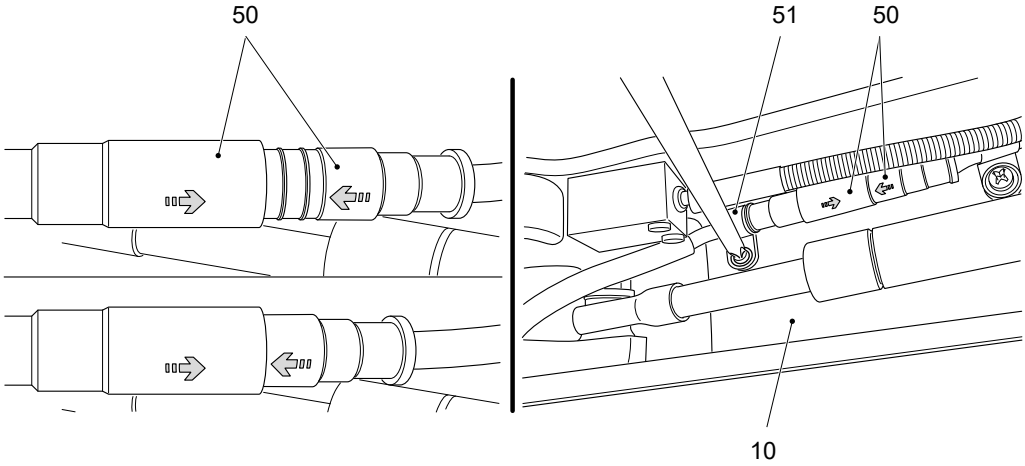


***Establishing the electrical connection of the tiller***

*Requirements*

– The tiller and gas strut have been fitted.

*Tools and Material Required*

– Screwdriver, PH2
– The following materials are supplied with the truck:
– Plastic clamp (51) with screw and washer

*Procedure*

- Press the tiller (10) down and hold it in this position.
- Before assembly, align the plug connections (50) such that the arrows on both parts are in line.
- Establish the connection (50).
- Align and install the plastic clamp (51) as shown.

*The electrical connection has been established. The tiller assembly process is completed.*

# D Battery - Servicing, Recharging, Replacement

## 1 Description of the lithium-ion battery

The lithium-ion battery is a battery with rechargeable high-performance energy cells.

The battery is designed for industrial trucks and can withstand heavy vibrations and knocks.

The battery features special connections for charging and discharging in order to prevent the use of incorrect batteries and chargers.

The battery has an intelligent battery management system, which includes safety functions such as voltage, temperature detection, undervoltage, overvoltage, overtemperature, overcurrent and short-circuit.

The internal resistance of the battery is very low, which minimises heat generation and maximises the power available to the truck.

**Temperatur range for using the battery**

Optimum battery useful life is achieved at the battery temperatures of +5 °C to +40 °C.

Low temperatures reduce the available battery capacity, high temperatures reduce the batteries useful life.

Temperature differences on both sides of the battery must not exceed 5 °C.

**Battery chargers**

Only approved battery chargers must be used to charge the lithium-ion battery, see page 22.

# 2 Battery Decals

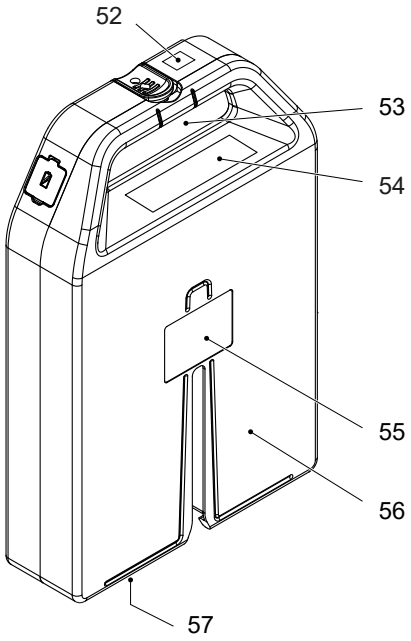


| Item | Description | Item | Description |
|---|---|---|---|
| 52 | Sign: "Capacity and nominal voltage" | 55 | Safety information |
| 53 | Data plate | 56 | Battery |
| 54 | Warning notice: "Avoid collision" | 57 | Serial number |

## 2.1 Battery data plate

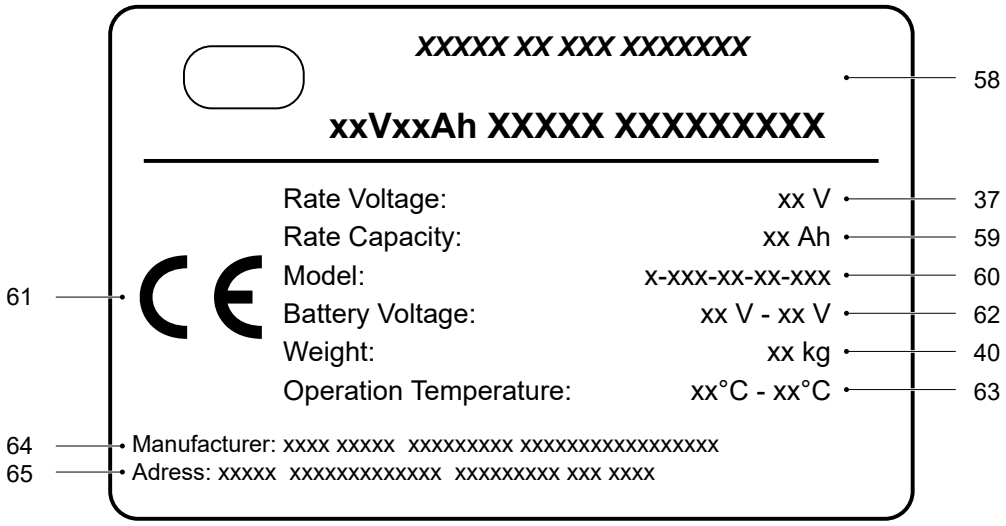


| Item | Description | Item | Description |
|---|---|---|---|
| 37 | Rated voltage | 61 | CE mark |
| 40 | Battery weight | 62 | Voltage range |
| 58 | Manufacturer logo and type designation | 63 | Operating temperature range |
| 59 | Battery capacity | 64 | Battery manufacturer |
| 60 | Model designation | 65 | Manufacturer address |

➔ The illustration shows the standard version for EU member states. The data plate may differ in other countries.

## 2.2 Battery serial number

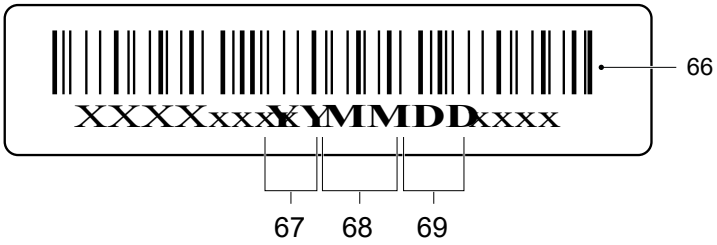


| Item | Description | Item | Description |
|---|---|---|---|
| 66 | Barcode | 68 | Month of manufacture |
| 67 | Year of manufacture | 69 | Day of manufacture |

# 3 Safety Instructions, Warning Indications and other Notes

## 3.1 Safety regulations for handling lithium-ion batteries

Do not carry out any repairs on the lithium-ion battery.

Replace defective lithium-ion battery by customer service.

**⚠ WARNING!**

**Risk of electric shock and burning**

Damaged and unsuitable cables can cause electric shocks and can overheat, resulting in fires.

- ▶ Always use mains cables with a maximum length of 30 m.
  Local regulations must be observed.
- ▶ Unwind the cable reel fully when using it.
- ▶ Always use original manufacturer’s mains cables.
- ▶ Insulation safety, acid and caustic ratings must comply with the manufacturer's mains lead.
- ▶ The charging connector must be dry and clean when used.

**⚠ WARNING!**

**Unsuitable batteries that have not been approved by the manufacturer for the truck can be hazardous**

The design, weight and dimensions of the battery have a considerable effect on the operational safety of the truck, in particular its stability and capacity. The use of unsuitable batteries that have not been approved for the truck by the manufacturer, can lead to a deterioration of the braking characteristics of the truck during energy recovery, causing considerable damage to the electric controller and resulting in serious danger to the health and safety of individuals.

- ▶ Only manufacturer-approved batteries may be used on the truck.
- ▶ Battery equipment may only be replaced with the agreement of the manufacturer.
- ▶ When replacing/installing the battery make sure the battery is securely located in the battery compartment of the truck.
- ▶ Do not use batteries that have not been approved by the manufacturer.

**⚠ WARNING!**

**Any damage and other defects to the charger can result in accidents.**

If any safety-related modifications, damage or other defects are discovered on the charger or during operation, the charger must be taken out of service until it has been repaired.

- ▶ Report any defects immediately to your supervisor.
- ▶ Tag out and decommission a faulty charger.
- ▶ Only return the charger to service when you have identified and rectified the fault.

**NOTICE**

**Risk of material damage due to improper charging**

Improper use of external charger can cause material damage

- ▶ It is necessary to apply the lithium-ion charger of our company.
- ▶ The operation voltage of the charger is 24 V; the maximum charging voltage is 29,4 V, the charging current is 5,0 / 8,0 / 12,0 A.
- ▶ The charger must only be used for batteries supplied by the manufacturer or other approved batteries provided it has been adapted by the manufacturer's service department.
- ▶ Reverse charge of the battery is prohibited.
- ▶ If the battery is heated obviously during charging, stop charging immediately. Charge again after it has been cooled down.
- ▶ Hold the puller when pulling the connectors. It is not allowed to pull the wires directly.

**NOTICE**

**Intermediate charging**

A lithium-ion battery that is not fully discharged can be recharged at any time either in part of in full. In order to ensure the reliable operation of the lithium-ion battery, the following must be borne in mind:

- ▶ In the event of frequent intermediate charging, charge the lithium-ion battery fully every 16 weeks. If the battery charger has a "balancing" function, ensure that the balancing phase is completed at the end of charging. Further information on "balancing" can be found in the operating instructions for the battery charger.
- ▶ Turn off the battery charger before disconnecting the lithium-ion battery from the battery charger.

## 3.2 Potential hazards

No hazards are anticipated if the equipment is used correctly.

**Hazards due to improper use**

Mechanical damage:
– Damage to the battery housing due to mechanical effects (e.g. the battery falling)
– Cracks, fractures, splinters or holes in the battery housing

Short circuit:
– Short circuit due to cracks, fractures, splinters or holes in the battery housing
– Emission of harmful substances, battery fire or explosion
– Short-circuit caused by connecting both battery terminals, e.g. if the battery is immersed in water

Temperature damage:
– Emission of harmful substances, battery fire or explosion due to high solar radiation or storage in a hot environment (e.g. near ovens)

**Storing damaged batteries**

A damaged battery must be stored safely until the customer service department arrives.

To avoid hazards due to emission of harmful substances, fire or explosion, the following must be observed:

– Do not store in places often frequented by personnel
– Do not store in places where valuable objects (e.g. vehicles) are stored
– An automatic fire detection system should trigger only in case of danger (e.g. open fire)
– Good ventilation of the storage location
– No connection of the storage location with a ventilation system, so that any escaping harmful substances are not distributed within a building

Examples of where to store a non-functional battery:

– Roofed outdoor position
– Ventilated container
– Closed box with pressure and smoke discharge option

### 3.2.1 Symbols - Safety and Warnings

#### 3.2.1.1 Safety and warning information

| | |
|---|---|
| | Used lithium-ion batteries must be treated as hazardous waste.<br>Lithium-ion batteries marked with the recycling symbol and the sign showing a crossed-out waste bin must not be disposed of with ordinary household waste.<br>Buy-back terms and type of recycling are to be agreed with the manufacturer in accordance with the Battery Directive 2006/66/EG, for example. |
| | Avoid fire and short circuits due to overheating.<br>Do not ignite or position open flames, glowing embers or sparks near the lithium-ion battery.<br>Keep lithium-ion batteries away from strong heat sources. |
| | Hot surfaces.<br>Battery cells can generate very high short-circuit currents, causing them to become hot. |
| | Dangerous electrical voltage!<br>Battery cells can generate very high short-circuit currents, causing them to become hot.<br>Caution!<br>The metal parts of the battery cells are constantly under voltage, so do not place any foreign objects or tools on the lithium-ion battery.<br>Observe the accident prevention regulations and DIN EN 62485-3. |
| | Wear personal protective equipment (e.g. safety goggles and safety gloves) when handling damaged battery cells and lithium-ion batteries. Use only insulated tools.<br>If the contents leak out, do not inhale the fumes.<br>Always wash your hands after completing the work.<br>Do not mechanically machine the lithium-ion battery, strike, crush, compress, notch, dent or modify it in any way.<br>Do not open, damage, penetrate, bend, heat the lithium-ion battery or allow it to become hot, do not throw it into a fire, short circuit it or immerse it in water. Do not store it or operate it in pressurised containers. |
| | Follow the operating instructions and keep them in a visible position in the charging area.<br>If any faults are found on the lithium-ion battery, contact the manufacturer's customer service department immediately.<br>Do not attempt to rectify faults independently.<br>Do not open the lithium-ion battery. |
| | Protect the lithium-ion battery from solar radiation or other forms of heat radiation.<br>Do not expose the lithium-ion battery to heat sources. |

### 3.2.2 Marking of packages with lithium-ion batteries

The lithium-ion battery is a hazardous material. The applicable ADR regulations must be observed during transport.

➔ ADR = Accord européen relatif au transport international des marchandises Dangereuses par Route

70

71

**UN 3171**

| Item | Description |
|---|---|
| 70 | Danger label class 9A for lithium-ion batteries |
| 71 | Marking of packages with lithium-ion batteries in accordance with the dangerous goods regulations GGVS/ADR appendix 9 for the transport of hazardous goods |

### 3.2.3 Explosion and fire hazard

**⚠ WARNING!**

Physical damage, thermal effects or incorrect storage in the event of a defect can result in explosions or fire.
The battery materials can be flammable.

#### 3.2.3.1 Particular hazard from combustion products

Fire-fighting measures may only be carried out on a burning lithium-ion battery by trained and specially equipped fire-fighting personnel (e.g. by a member of the fire brigade).

The lithium ion battery may be damaged by a fire in the vicinity of the lithium ion battery. When fighting a lithium-ion battery fire, the following dangers and information must be taken into consideration.

**⚠ WARNING!**

**Risk due to contact with combustion products**

Combustion is a chemical process by which a flammable material combines with oxygen under heat and light (fire). The resulting combustion products can occur in the form of smoke, through leaking fluids, escaping gases, debris as well decomposition products of certain chemicals. These combustion products are substances that enter the body through the respiratory tract or skin, where they can produce adverse effects such as choking.

▶Avoid contact with combustion products.

▶Use protective equipment.

- Hydrogen fluoride (HF) Hydrofluoric acid = extremely corrosive
- Risk of toxic substances produced by pyrolysis
- Risk of highly flammable gas mixtures
- Other combustion products: carbon monoxide and carbon dioxide as well as manganese oxide, nickel oxide and cobalt oxide

#### 3.2.3.2 Instructions for cooling an overheated, non physically damaged battery

This type of damage may be caused by a short circuit inside the battery, which may result in harmful materials leaking, fire or battery explosion.
Endangered unopened batteries can be cooled using a water
jet.

### 3.2.4 Material discharge

**⚠ WARNING!**

**Hazard from liquid or gaseous contents from the battery**

In the event of a technical defect or mechanical damage to the lithium-ion battery, as well as an overheated lithium-ion battery, electrolyte fluid can escape in liquid or gaseous form. Electrolyte fluid is hazardous to health. If the electrolyte fluid comes into contact with the skin or eyes, this can result in chemical burns and visual impairment. Inhaling the contents of electrolyte fluid can lead to respiratory illness.

▶ Wear personal protective equipment (e.g. safety gloves, safety shoes, respirator mask).

▶ In the case of contact with the skin or eyes, rinse the affected areas with plenty of water and seek medical assistance immediately.

▶ If the contents leak out, do not inhale the fumes.

▶ If contents have been inhaled, seek medical assistance immediately. The affected person should also be taken to the fresh air.

▶ Cordon off the affected area.

▶ Ensure there is adequate ventilation.

▶ Remain upwind of the area.

▶ Keep persons away.

#### 3.2.4.1 Precautionary measures for personnel

- Keep personnel away and facing the wind.
- Block off the affected area.
- Ensure there is adequate ventilation.
- Wear personal protective equipment.
- If vapours / dust / aerosols are present, use self-contained breathing apparatus.

#### 3.2.4.2 Precautionary measures for the environment

Do not allow spilled fluids to enter the water system, drainage system or the underground
water.

#### 3.2.4.3 Cleaning measures

The leaked fluid must be removed professionally by the operating company on the basis of a risk assessment and disposed of in the correct manner. The fire brigade, the Agency for Technical Relief or similar institutions must be used. Absorb residues with liquid-absorbent material (such as vermiculite, sand, universal binders and pebble grain).

### 3.2.5 Touch voltage hazard

**⚠ WARNING!**

**Touch voltage hazard**

Hazardous touch voltages may occur in the event of a technical or mechanical defect on the battery. Touch voltages also occur on seemingly discharged batteries. Touching the battery terminals or live attachments (battery cable, battery connector etc.) can result in dangerous current flows through the body. There is a risk of serious, irreversible or fatal injuries.

- ▶ Tag out the faulty battery and take out of service.
- ▶ Do not touch faulty batteries.
- ▶ Do not place any objects or tools on the lithium-ion battery to avoid short-circuiting the battery.
- ▶ Do not short-circuit the lithium-ion battery.
- ▶ Notify the customer service department.

---

With this kind of defect the battery must not be touched and must not come into contact with metal objects see page 40.

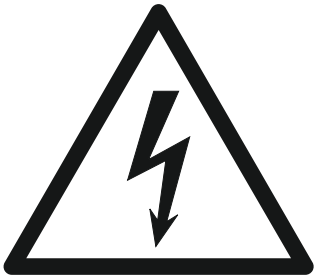

## 3.3 Battery lifetime and maintenance

The lithium-ion battery is wear-free. The components are maintenance-free, as a result there are no maintenance intervals planned for this battery.

## 3.4 Charging the battery

**⚠ DANGER!**

**Explosion risk when charging unsuitable battery types**

Charging a battery that is not suitable for this charger can result in damage to the charger and battery. The battery could expand or burst.

▶ The lithium-ion battery must only be charged with the battery charger provided for this battery.

**⚠ WARNING!**

**Warning: hazardous electrical voltage!**

The charger is an electric component conducting voltages and currents that are hazardous to people.

▶ The charger must only be operated by trained technicians.

▶ Disconnect the mains supply and the battery connector before carrying out any work on the charger.

▶ The charger should only be opened and serviced by trained electricians.

**⚠ WARNING!**

The use of a different charger can result in overheating, fire or a battery explosion.

***NOTICE***

**Full discharge can damage the battery**

Self-discharge can cause the battery to fully discharge. Full discharge shortens the service life of the battery.

▶ Before a long period of inactivity, the battery must be fully charged.

▶ Charge the battery at least every 16 weeks, see page 47.

➔ If the battery is deeply discharged or if the battery temperature is below the permissible level (0 °C), the battery will not charge. Deeply discharged batteries cannot be charged by the operator (faulty). Contact the manufacturer's customer service department.

➔ Due to the risk of condensate formation, batteries that have been stored at temperatures below 0 °C must only be charged after spending at least 4 hours in a warm environment.

## 3.5 Storage / safe handling / faults

### 3.5.1 Storing the battery

**NOTICE**

**Damage to the lithium-ion battery due to discharge**

If the lithium-ion battery is not used for a long period of time, it can become damaged through discharge.

▶ Fully charge the battery before extended downtimes.

▶ To ensure a long service life of the lithium-ion battery, it must be fully charged every 16 weeks when not in use.

The temperature range for storing the battery is 0 °C to +30 °C.

### 3.5.2 Instructions for safe handling

**NOTICE**

**Charge status of the lithium-ion battery on leaving the manufacturer's plant**

New lithium-ion batteries are transported and stored with a charge status of at least < 100 %.

- Do not physically machine or modify the battery.
- Do not open, damage, penetrate or bend the battery.
- Do not throw the battery into a fire.
- Protect the battery from high temperatures and overheating.
- Protect the battery from solar irradiation.
- Keep the battery away from radiant sources and strong heat sources.
- The specified charging, operating and storage temperature ranges must be observed.

Failure to comply with these safety instructions can result in fire and explosion or the leakage of harmful materials.

### 3.5.3 Faults

**⚠ WARNING!**

Do not open the battery.

If any damage is found to the battery or battery charger contact the manufacturer's customer service department immediately. The operating company must not carry out any remedial work on its own.

Independent attempts to tamper with or repair the battery may invalidate the warranty. A service agreement with the manufacturer will help identify faults.

## 3.6 Disposal and transport of a lithium-ion battery

### 3.6.1 Instructions for disposal

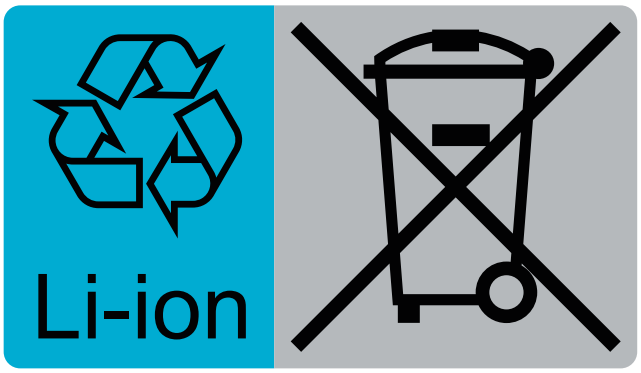


Used lithium-ion batteries are recyclable commodities. These lithium-ion batteries must be treated as hazardous waste.

Lithium-ion batteries marked with the recycling symbol and the sign showing a crossed-out waste bin must not be disposed of with ordinary household waste.

Return or recycling of batteries must be ensured, for example, in accordance with the Battery Directive 2006/66/EG. Buy-back terms and the manner of recycling must be agreed with the manufacturer.

**Instructions for disposal**

Lithium-ion batteries must be disposed of in accordance with the relevant national environmental protection regulations.

▶ For lithium-ion battery disposal, contact the manufacturer's customer service department.

### 3.6.2 Shipping information

The lithium-ion battery is a hazardous material. The applicable ADR regulations must be observed during transport.

➔ ADR = Accord européen relatif au transport international des marchandises Dangereuses par Route

#### 3.6.2.1 Shipping functional batteries

Functioning batteries can be shipped in accordance with the following regulations:

| | |
|---|---|
| Classification according to ADR (road transport) | UN 3480 lithium-ion battery class 9 |
| - Classification code | M4 lithium battery |
| - Danger label | 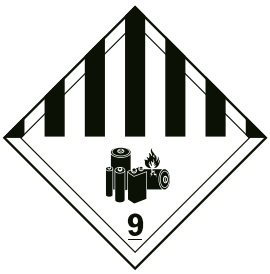 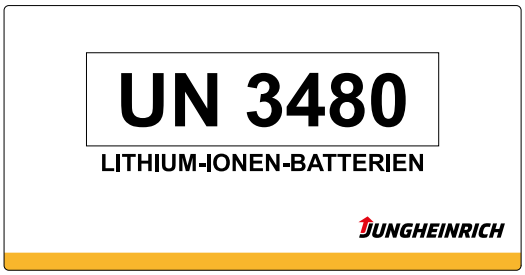  |
| - ADR limited quantity | LQ:0 |

| | |
|---|---|
| IMDG classification (sea transport) | UN 3480 lithium-ion battery class 9 |
| - EMS | F-A, S-I |
| - Danger label | 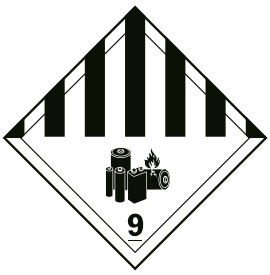 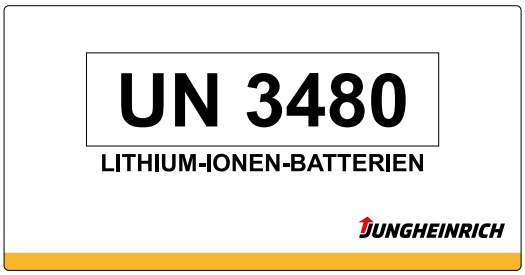  |
| - IMDG limited quantity | LQ: - |

| | |
|---|---|
| IATA classification (air transport) | UN 3480 lithium-ion battery class 9 |
| - Danger label | 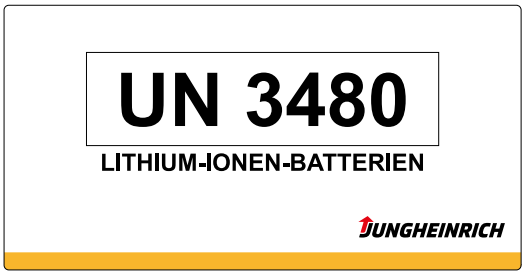 |



| | |
|---|---|
| Exposure scenario | Not specified. |
| Substance safety rating | Not specified. |
| Marking | Product does not require marking under EC Directive / HazMatR. |

***NOTICE***

New lithium-ion batteries are transported with a charge status of at least < 100 %.

### 3.6.2.2 Shipping faulty batteries

To transport these faulty lithium-ion batteries, contact the manufacturer's customer service department. Faulty lithium-ion batteries must not be transported independently.

# 4 Charging the battery

## 4.1 Correct Use and Application

The operating instructions are a major component of the charger.

The owner shall ensure that the operating instructions are kept permanently in the vicinity of the charger, and that operating personnel shall be aware of the guidelines mentioned in the instructions.

The owner shall add further instructions regarding national accident prevention and environmental protection regulations to the operating instructions, including information on supervisory and reporting obligations, taking into account particular company practices e.g. in terms of work organization, work processes and the personnel employed.

Apart from the operating instructions and the current accident prevention regulations in force in the country and place of use, generally recognised technical regulations for safe and proper use shall be observed.

**Charging the battery**

➔ The lithium-ion battery may only be charged with an approved charger within the permissible temperature range,see page 22.

The truck should not be stored without battery compensation charge for more than 16 weeks.

***NOTICE***

**Damage to the lithium-ion battery due to improper connection**

Unsuitable connector plugs of industrial trucks or battery chargers used with the lithium-ion battery can damage the battery connector.

▶ Operate the lithium-ion battery only with appropriate trucks and battery chargers.

## 4.2 Charge Status Indicator

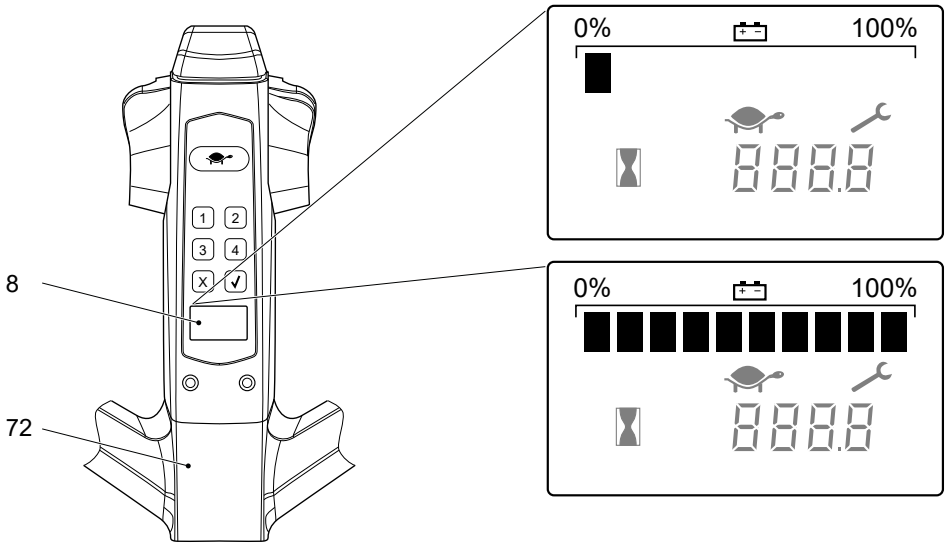


The charge status indicator of the battery is integrated in the display unit (8) on the tiller head (72).

The charge status is displayed in ten increments. Each is represented by a rectangle that corresponds to 10% battery charge.

The rectangles gradually disappear as the battery discharges. Special statuses appear in the display unit as error codes.

| Code | The error code appears if ... | Effect |
|---|---|---|
| 0 | The battery charge is too low. | Lift function is deactivated. |
| 91 | Operation of the truck continues without first charging the battery. | Travel speed is reduced. |

## 4.3 Charging the Battery with External Charger

### Maintenance personnel

Batteries may only be charged, serviced or replaced by trained personnel. These operating instructions and the battery manufacturer's instructions must be observed when performing these operations.

The truck must be parked securely before all work on the batteries, see page 66.

### General information

- The charge status of the battery is indicated by LEDs on the battery charger.
- The charging time depends on the battery charge status. The time it takes to charge an almost fully depleted battery depends both on the battery capacity and the charge current. The approximate duration can be calculated as follows:
  Charging time = capacity of battery / charge current of battery charger.
- The lithium-ion battery can also be used when not fully charged. In this case, the remaining operating time is reduced.
- Charging continues automatically after a mains failure. Charging can be interrupted by pulling out the mains connector and continued as a partial charge.

***NOTICE***

The battery temperature rises by approx. 13 °C during charging. Battery charging should only start when the battery temperature is below 50 °C. The battery temperature before charging should be at least 0 °C as otherwise it will affect the charge.

### Meaning of the LEDs on the battery charger

When the battery charger is connected to the battery and to the power supply, the LEDs on the charger indicate the following:

| LED lit | Meaning |
|---|---|
| Green | The battery is fully charged |
| Red | Battery is charging |

If the green LED does not light up or if the red LED lights up permanently or not at all, this indicates a fault, see page 80.

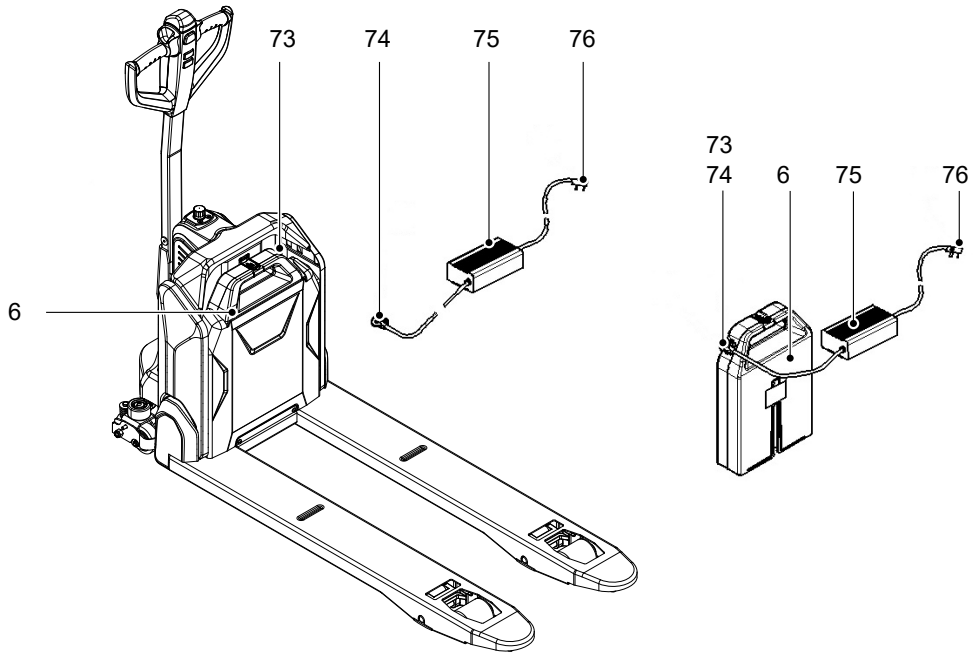


***Charging the battery***

*Requirements*

– The truck is parked securely, see page 66.
– The battery charger is approved for the battery type, see page 22.

*Tools and Material Required*

– Battery charger

*Procedure*

- Expose the charging socket (73) of the battery and start by connecting it to the charge connector (74) of the battery charger (75).
- Then connect the mains plug (76) of the battery charger (75) to the power supply.

➔ The charging process is indicated by the illumination of the red LED.

- Check the charge status; also refer to the instructions on the battery charger (75).

➔ The charging process is completed when the green LED lights up.

- Once the battery (6) is charged, disconnect the battery charger (75) from the power supply before unplugging it from the battery.
- Close the charging socket (73)with the cap.

*Battery is charged.*

➔ Alternatively, the battery can also be charged outside the truck, see page 56. The process for charging the battery remains the same.

# 5 Removing or installing the battery

## 5.1 Removing the battery

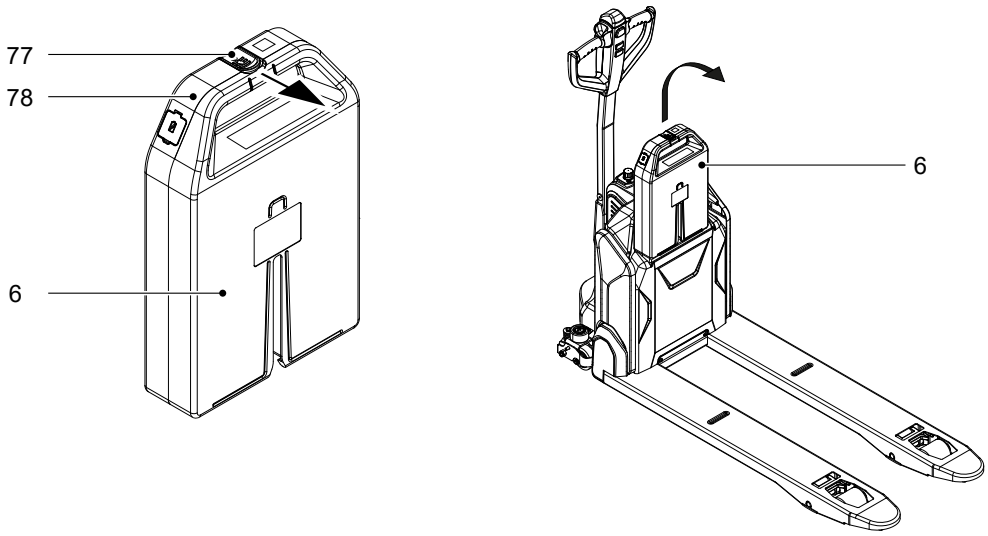


***Removing the battery***

*Requirements*

– The truck is parked securely, see page 66.
– The emergency disconnect switch is actuated, see page 70.

*Procedure*

- Unlock the battery latch (77).
- Lift the battery (6) up by the battery handle (78).

*The battery has been removed.*

## 5.2 Battery installation

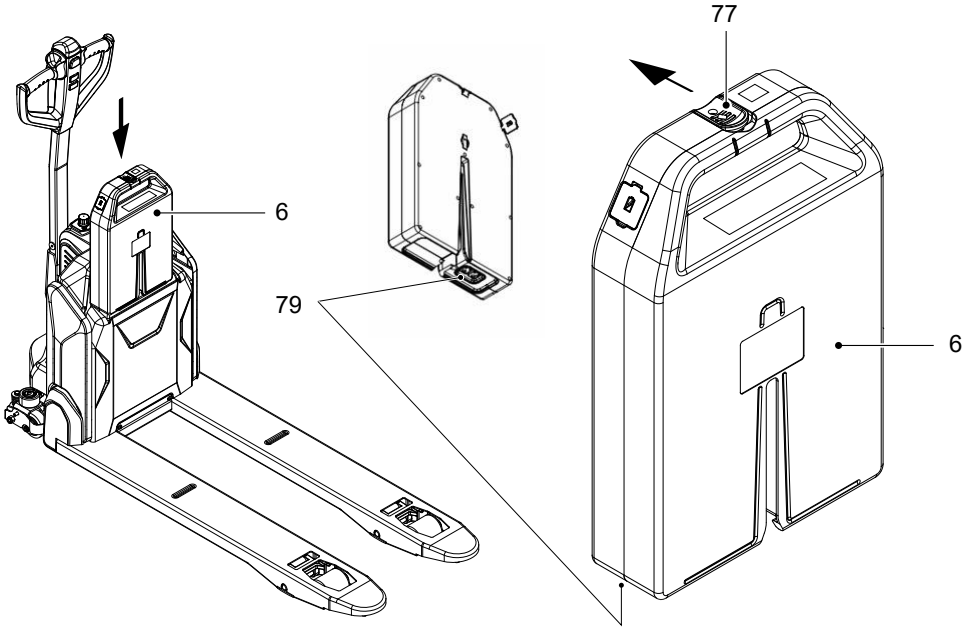


***Installing the battery***

*Requirements*

– The truck is parked securely, see page 66.

*Procedure*

- Insert the battery (6) into the battery compartment.

➔ The plug connection (79) between the battery and truck must be fully connected.

- Lock the battery latch (77).
- Release the emergency disconnect switch, see page 70.

*The battery is now installed.*

# E Operation

## 1 Safety Regulations for the Operation of Forklift Trucks

**Driver authorisation**

The truck may only be used by suitably trained personnel, who have demonstrated to the proprietor or his representative that they can drive and handle loads and have been authorised to operate the truck by the proprietor or his representative.

**Operator's rights, responsibilities and rules of conduct**

The driver must be informed of his duties and responsibilities and be instructed in the operation of the truck and shall be familiar with the operating instructions. Safety shoes must be worn on pedestrian-operated trucks.

**Do not allow unauthorised persons to use the truck**

The operator is responsible for the truck during the time it is in use. The operator must prevent unauthorised persons from driving or operating the truck. Do not carry passengers or lift other people.

When leaving the industrial truck, the operator must ensure that the industrial truck is secured against unauthorised use, e.g. remove the key or keep the access code secret.

**Damage and defects**

The supervisor must be informed immediately of any damage or faults to the truck or attachment. Trucks which are unsafe for operation (e.g. wheel or brake problems) must not be used until they have been rectified.

**Repairs**

The operator must not carry out any repairs or alterations to the truck without authorisation and the necessary training to do so. The operator must never disable or adjust safety mechanisms or switches.

### Hazardous area

**⚠ WARNING!**

**Risk of accidents/injury in the hazardous area of the truck**

A hazardous area is defined as the area in which people are at risk due to travel or lifting operations of the truck, its load handler or the load. This also includes the area within reach of falling loads or lowering/falling operating equipment.

- ▶ Instruct unauthorised persons to leave the hazardous area.
- ▶ In case of danger to third parties, give a warning signal in good time.
- ▶ If unauthorised persons are still within the hazardous area, stop the truck immediately.

---

### Safety devices, warning signs and warning instructions

Safety devices, warning signs (see page 24) and warning instructions in the present operating instructions must be strictly observed.

# 2 Displays and Controls

## 2.1 Controls

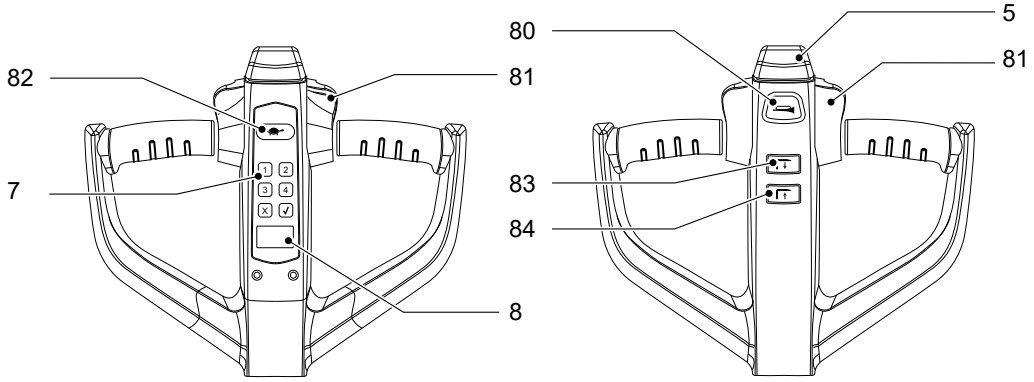


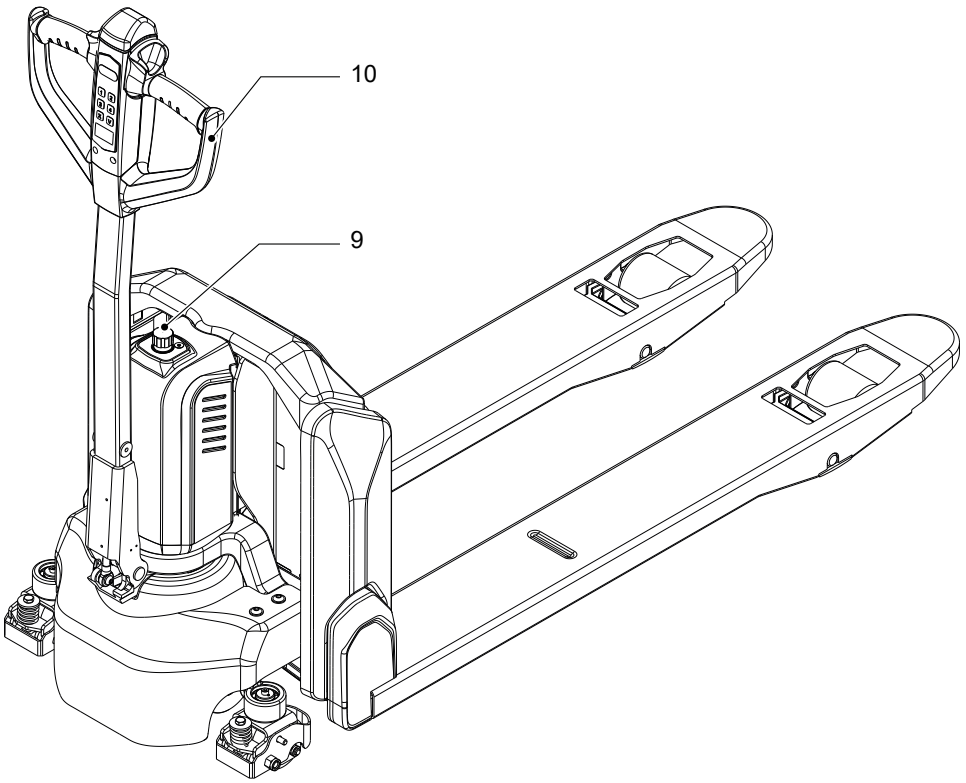

| Item | Description | Function |
|---|---|---|
| 5 | Collision safety switch | Safety feature<br>When the collision safety switch is activated, the truck travels a short distance away from the operator in load direction, thus protecting the operator. The truck is then braked, see page 18. |
| 7 | Keypad | Entry of access code for starting the truck, see page 31. |
| 8 | Display unit | Displays various truck data, see page 63. |
| 9 | Emergency disconnect switch | Stops all electrical functions (travel, lifting, lowering) and activates the electromagnetic brake, see page 70. |
| 10 | Tiller | Steers the truck via corresponding movements, see page 75. |
| 80 | Warning signal button | Activates an audible signal. |
| 81 | Travel switch | Controls the travel direction and the travel speed, see page 73. |
| 82 | Slow travel button | Toggles between slow travel and travel at normal speed. Switches to slow travel when the tiller is in vertical position, see page 74. |
| 83 | Lift button | Raises the load handler, see page 76. |
| 84 | Lower button | Lowers the load handler, see page 76. |

## 2.2 Display symbols

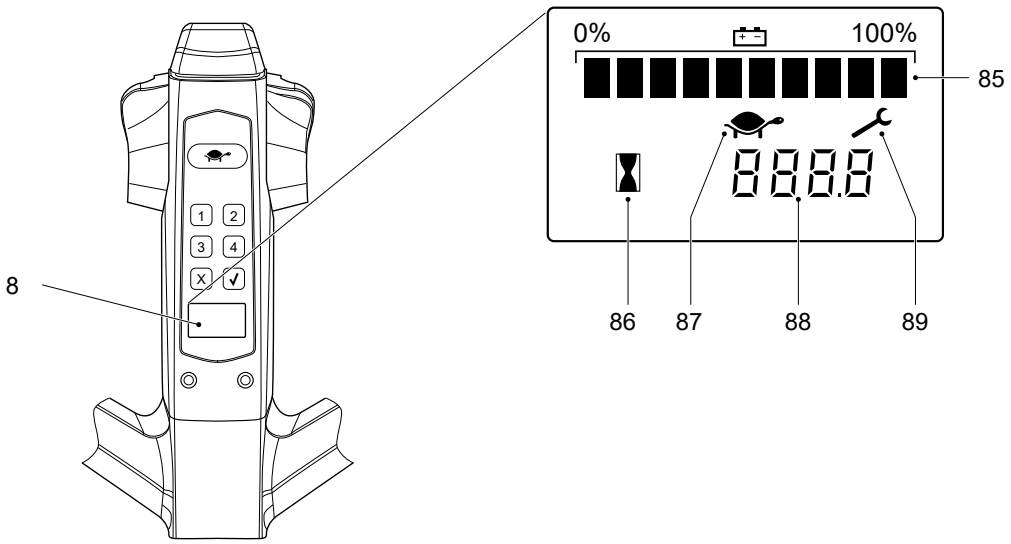


| Item | Designation | Function |
|---|---|---|
| 8 | Display unit | Displays symbols for:<br>- Battery charge status<br>- Slow travel<br>- Hour meter<br>- Service and fault messages. |
| 85 | Charge status indicator | Shows the battery charge status – see page 53. |
| 86 | Hourglass | Flashes when the hour meter is active. |
| 87 | Tortoise | Only appears when slow travel mode is active. |
| 88 | Number field | Displays operating hours or fault codes. |
| 89 | Service symbol | Only appears when scheduled maintenance is required or if faults exist.<br>Fault codes are displayed in the number field. |

# 3 Starting up the truck

## 3.1 Checks and operations to be performed before starting daily operation

**⚠ WARNING!**

**Truck damage or defects can result in accidents**

If damage or other truck defects are discovered during the following checks, the truck must be taken out of service until it has been repaired.

▶ Report any defects immediately to your supervisor.

▶ Tag out the defective truck and take it out of service.

▶ Do not return the truck to service until you have identified and rectified the fault.

***Inspection before daily operation***

*Requirements*

– The truck is parked securely, see page 66.

*Procedure*

- Check the entire truck from the outside for damage and leaks.
- Check the load handler for visible signs of damage such as cracks, bent or severely worn forks.
- Check the hydraulic system for leaks, see page 98.
- Check the battery attachment and cable connections for damage and make sure they are secure.
- Check the drive wheel and load wheels for damage and freedom of movement, see page 97.
- Check that the markings and labels are all present and legible, see page 24.
- Check that the controls automatically return to the neutral position after use, see page 73.
- Switch on the truck, see page 64.
- Check the battery charge status, see page 53.
- Test the warning signal, see page 61.
- Test the brakes, see page 71.
- Test the travel functions, see page 73.
- Test the lifting and lowering functions, see page 76.
- Test the emergency disconnect switch, see page 70.
- Test the collision safety switch, see page 18.

## 3.2 Preparing the truck for operation

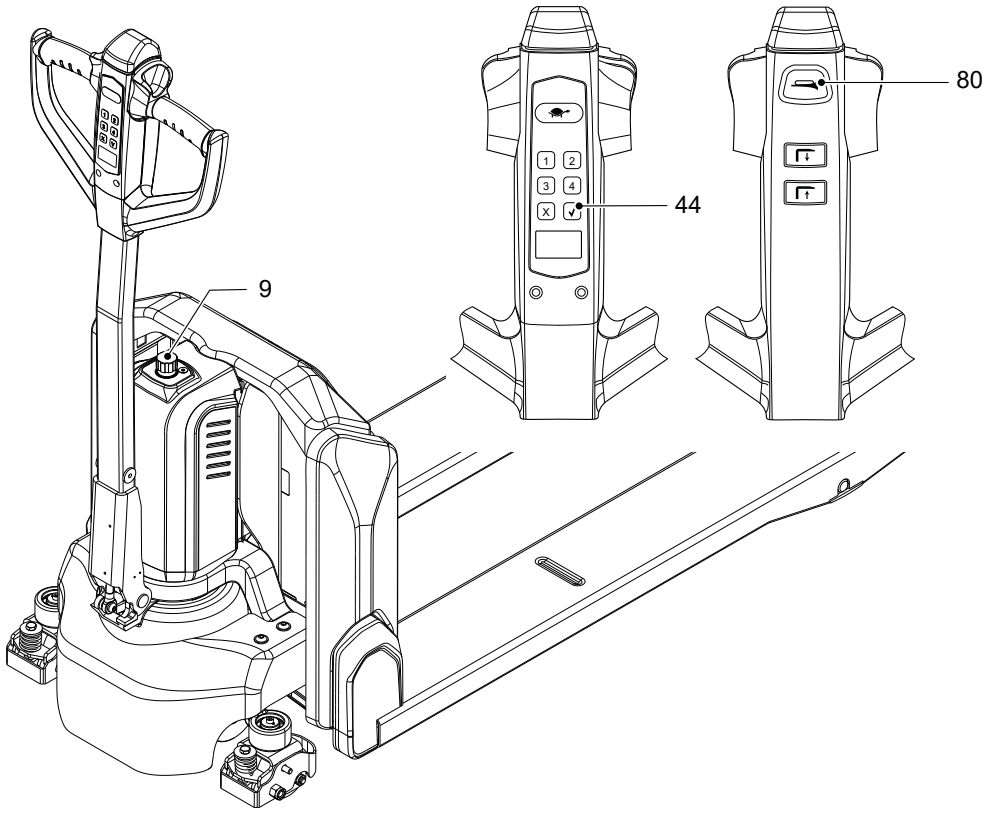


***Switching on the truck***

*Requirements*

– Checks and operations before starting daily work have been completed, see page 64.
– Load is correctly palletised and secured, see page 76.

*Procedure*

- Release the emergency disconnect switch (9), see page 70.
- Switch on the truck. To do this:
  - Enter the access code, see page 31.
  - Press the RETURN key (44).
- Press the warning signal button (80).

*The truck is ready for operation.*

## 3.3 Parking the truck securely

**⚠ WARNING!**

**An unsecured truck can cause accidents**

Parking the truck on an incline, without the brakes applied or with a raised load or load handler is dangerous and is strictly prohibited.

- ▶ Park the truck on a level surface. In special cases the truck may need to be secured with wedges.
- ▶ Fully lower the load handler.
- ▶ Select a place to park where no other people are at risk of injury from the lowered load handler.
- ▶ If the brakes are not working, place wedges underneath the wheels of the truck to prevent it from moving.

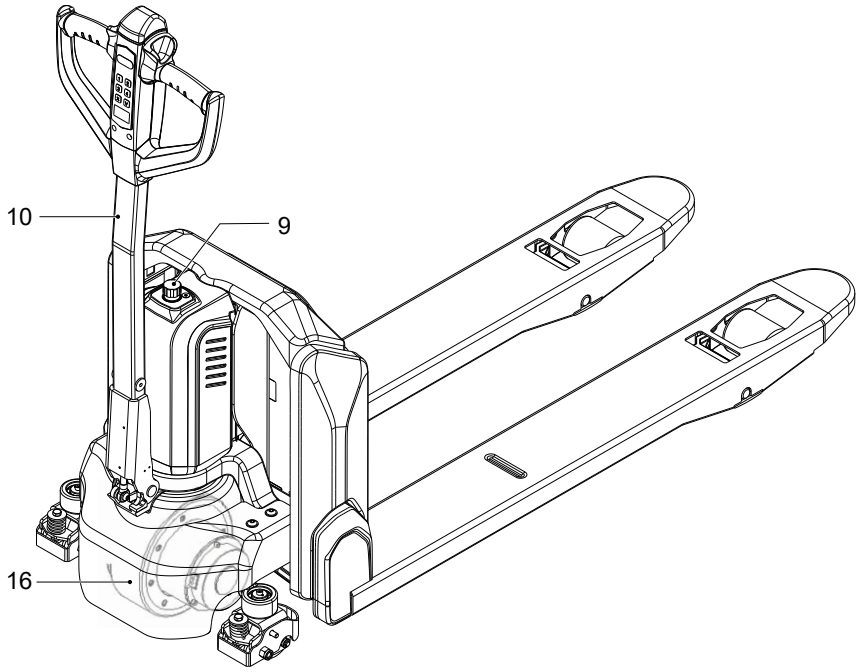


### *Parking the truck securely*

*Procedure*

- Park the truck on a level surface.
- Fully lower the load handler, see page 76.
- Turn the drive wheel (16) to the straight-ahead position using the tiller (10).
- Press the emergency disconnect switch (9).

*Truck is parked securely.*

# 4 Working with the truck

## 4.1 Safety regulations for travel mode

### Travel routes and work areas

Only use lanes and routes specifically designated for traffic. Unauthorised third parties must stay away from work areas. The load may only be stored in the designated locations.
The truck must only be operated in work areas with sufficient lighting to avoid danger to personnel and materials.

**⚠ DANGER!**

Do not exceed the permissible surface and point loading on the travel lanes.
At blind spots get a second person to assist.
The driver must ensure that the loading dock /dock leveller cannot be removed or come loose during loading/unloading.

### Conduct while travelling

The operator must adapt the travel speed to local conditions. The operator must drive slowly e.g. on corners and in narrow spaces, when driving through swinging doors, in blind spots. The operator must always observe an adequate braking distance between the forklift truck and the vehicle in front and must be in control of the truck at all times. Abrupt stopping (except in emergencies), rapid U turns and overtaking at dangerous or blind spots are not permitted.

### Travel visibility

The operator must look in the direction of travel and must always have a clear view of the route ahead. If the truck is carrying loads that affect visibility, the truck must travel against the load direction. If this is not possible, a second person must walk alongside the truck as a lookout to observe the travel route while maintaining eye contact with the operator. Proceed only at walking pace and with particular care. Stop the truck as soon as you lose eye contact.

### Negotiating slopes and inclines

Negotiating slopes and inclines up to 16 % is only permitted when they are recognised lanes. The slopes and inclines must be clean, have a non-slip surface, and negotiating them safely must be within the technical specifications of the truck. The truck must always be driven with the load facing uphill. The industrial truck must not be turned, operated at an angle or parked on inclines or slopes. Inclines must only be negotiated at slow speed, with the driver ready to brake at any moment.

### Negotiating lifts, loading ramps and docks

Lifts may only be negotiated if they have sufficient capacity, are suitable for driving on and authorised for truck traffic by the owner. The driver must satisfy himself of the above before entering these areas. The truck must enter lifts with the load in front and must take up a position which does not allow it to come into contact with the walls of the lift shaft. Persons riding in the lift with the forklift truck must only enter the lift after the truck has come to a rest and must leave the lift before the truck. The driver must ensure that the loading ramp / dock cannot move or come loose during loading / unloading.

### Types of load to be carried

The operator must make sure that the loads are in a satisfactory condition. Loads must always be positioned safely and carefully. Take appropriate countermeasures if there is a risk of the load or parts of the load tipping or falling down.

Prevent liquid loads from sloshing out. Drive slowly and take special care when transporting liquid loads. Avoid abrupt braking or acceleration.

**⚠ WARNING!**

**Electromagnetic influence can result in accidents**

Strong magnets can cause electronic components such as Hall sensors to become damaged, resulting in accidents.

▶ Do not use magnets in the operating area of the truck. Exceptions to this rule are commercial, weak clamping magnets for attaching notices.

## 4.2 Emergency Disconnect

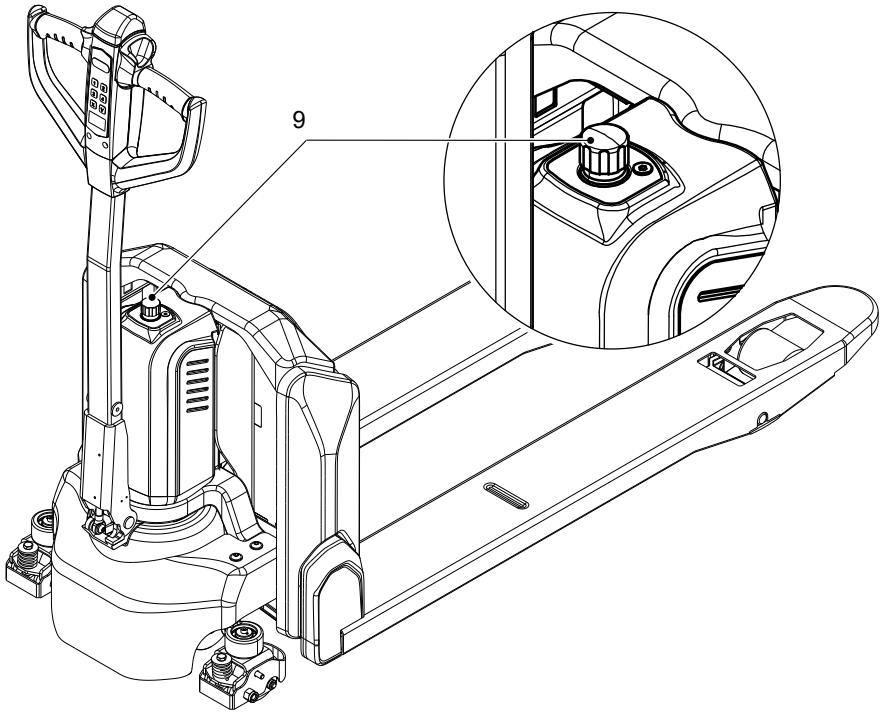


***Pressing the Emergency Disconnect switch***

*Procedure*

- Press the Emergency Disconnect (9).

*All electrical functions are deactivated. The truck brakes to a halt at maximum brake force.*

***Releasing the emergency disconnect switch***

*Procedure*

- Turn the emergency disconnect switch (9) to unlock it.

*All electrical functions are enabled and the truck is operational again (assuming the truck was operational before the emergency disconnect switch was pressed).*

## 4.3 Brakes

**⚠ WARNING!**

**Risk of collision due to a defective tiller**

Operating the truck with a defective tiller can lead to collisions with persons or objects.

- ▶ If the tiller returns to the brake position slowly or not at all, the truck must be taken out of service until the cause of this fault is be rectified.
- ▶ Contact the manufacturer's customer service department.

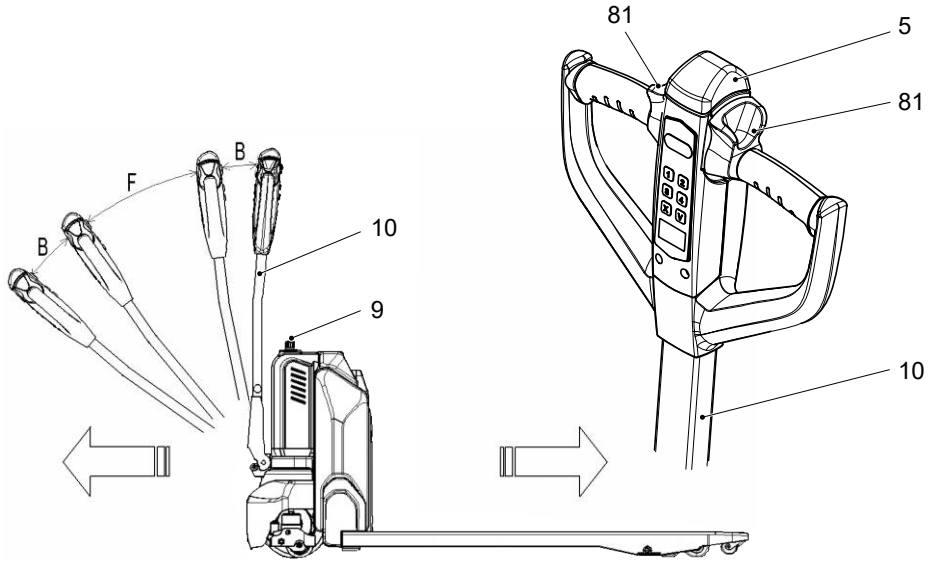


The braking behaviour of the truck largely depends on the ground conditions and the truck load. The operator must take this into account.

The truck can brake in different ways:

| **Braking type** | | |
|---|---|---|
| | **Action** | **Effect** |
| Service brake | | |
| | Set the travel switch (81) to the neutral "0" position. | The regenerative brake is activated. The truck brakes to a halt. |
| Travel switch reverse | | |
| | Turn the travel switch (81) in the opposite direction. | The regenerative brake is activated. The truck brakes and begins travelling in the opposite direction. |
| Coasting brake | | |
| | Move the tiller (10) to the brake zone "B".<br>➔ When the tiller is released, it automatically returns to vertical position. | The truck brakes to a halt. |
| Safety brake | | |
| | Operate the collision safety switch (5).<br>➔ This function is also active if the truck is stationary and the tiller is in the travel zone "F". | The truck brakes and travels a short distance in the opposite direction to protect the operator. |
| Emergency brake | | |
| | Press the emergency disconnect switch (9).<br>➔ Only do this in an emergency, as damage to the drive wheel may occur. | The truck brakes to a halt at the maximum rate. |

## 4.4 Travel

**⚠ WARNING!**

**Risk of injury or trapping from the truck**

Be extremely careful when driving and steering, especially if parts of your body extend beyond the truck. The operator's legs and feet could get injured or trapped.

▶Wear personal protective equipment (e.g. safety shoes, ...).

▶In pedestrian mode make sure you have sufficient distance from the truck.

▶Make sure there is nobody between the truck and any obstacles.

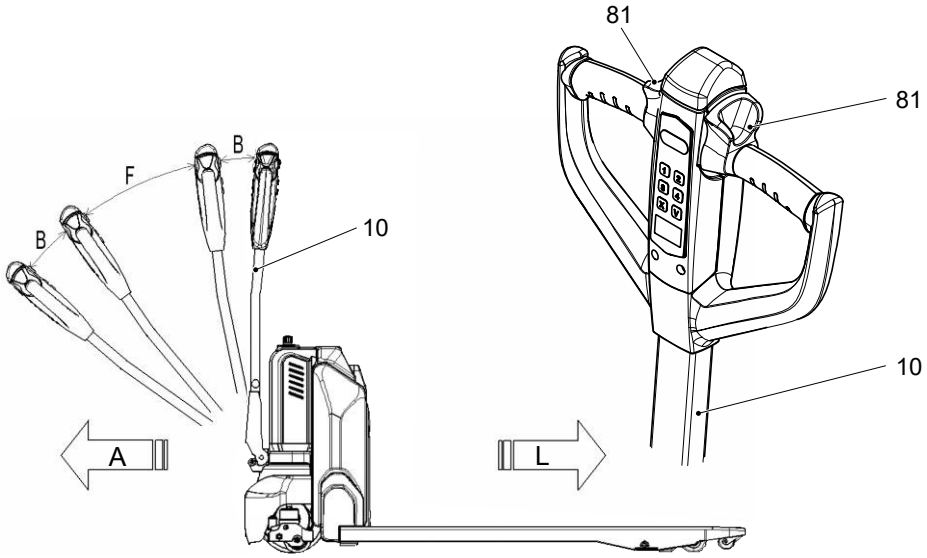


*Requirements*

– Truck has been prepared for operation – see page 64

*Procedure*

- Set the tiller (10) to the travel zone (F).
- Control the travel direction with the travel switch (81):
  - Slowly turn the travel switch in the load direction (L): Travel in load direction.
  - Slowly turn the travel switch in the drive direction (A): Travel in drive direction.
- Control the travel speed with the travel switch (81):
  - The further the travel switch is turned, the higher the speed.

*The brake is released and the truck moves in the selected direction.*

## 4.5 Slow travel

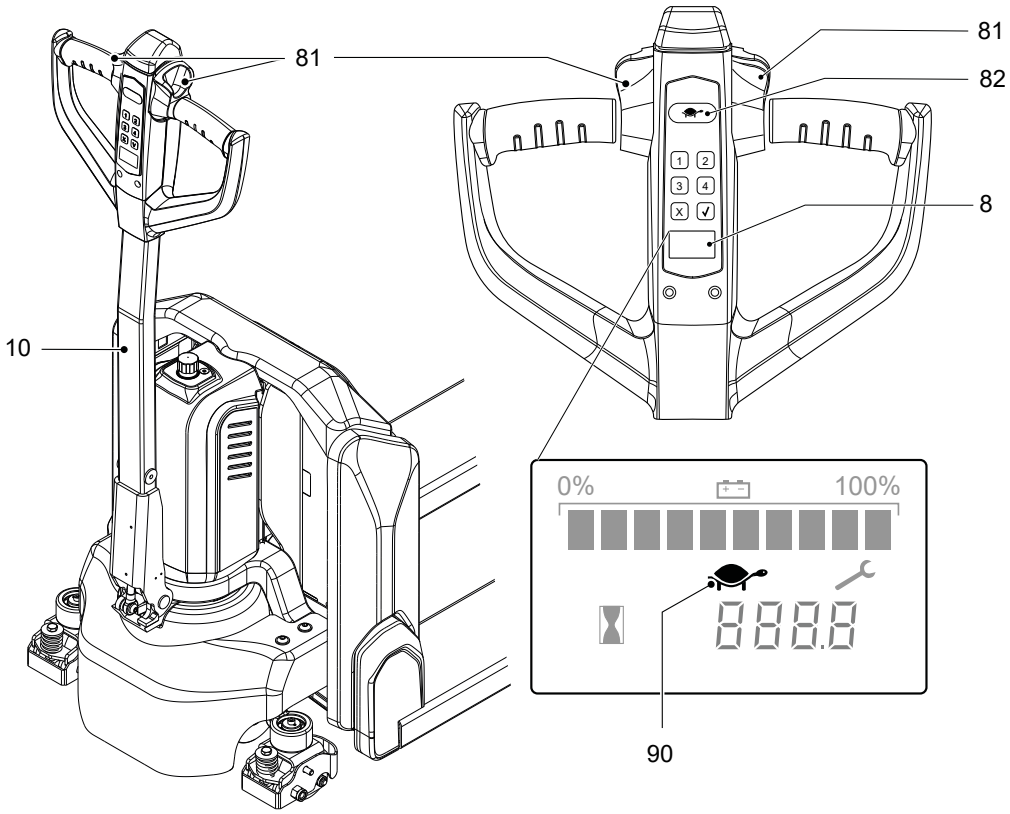


***Operating the truck at slow speed***

*Requirements*

– Truck prepared for operation – see page 65.

*Procedure*

- Slow travel with tiller (10) in travel zone "F":
  - Press the slow travel button (82).
  - Press the travel switch (81) in the desired direction.
  - Press the slow travel button again to resume travelling at normal speed.
- Slow travel with tiller (10) in vertical position in confined spaces:
  - Press the slow travel button (82) for approx. 2 seconds.
  - Press the travel switch (81) in the desired direction.
  - Press the slow travel button again to resume travelling at normal speed.

*The truck can be steered with precision at slow speed and in tight spaces.*

➔ Slow travel is indicated on the display unit (8) by the tortoise symbol (90).

## 4.6 Steering

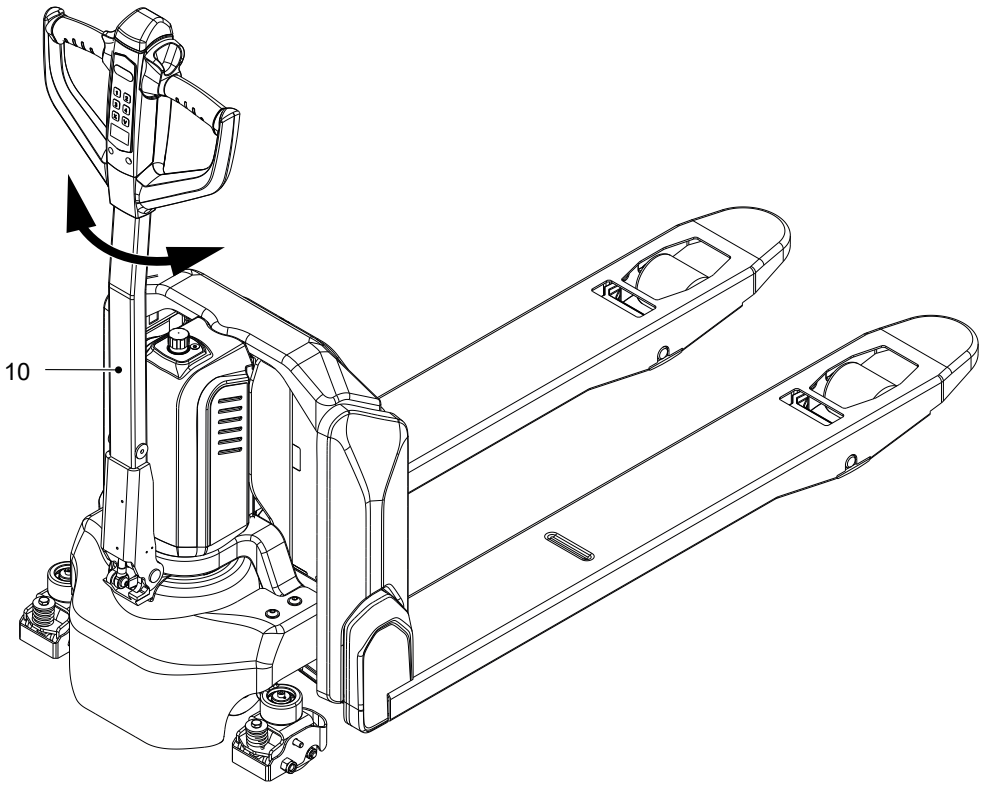


*Procedure*

- Move the tiller (10) to the left or right.

*The truck is steered in the required direction.*

## 4.7 Lifting, transporting and depositing loads

**⚠ WARNING!**

**Incorrectly secured or unsecured load units**

There is a risk of accidents due to tipping or falling load units.

- ▶ Only transport loads that have been correctly secured and positioned.
- ▶ Do not exceed the approved rated capacity of the industrial truck.
- ▶ Insert the load handler as far as possible underneath the load.
- ▶ Do not step on the load handler.
- ▶ Do not lift people.
- ▶ Do not pick up any longitudinal goods (e.g. pipes) crosswise.
- ▶ Instruct other people to move out of the hazardous area of the truck.
- ▶ Do not continue working until the persons have left the hazardous area.

***NOTICE***

Adapt a slower speed when stacking and retrieving.

### 4.7.1 Raising a load

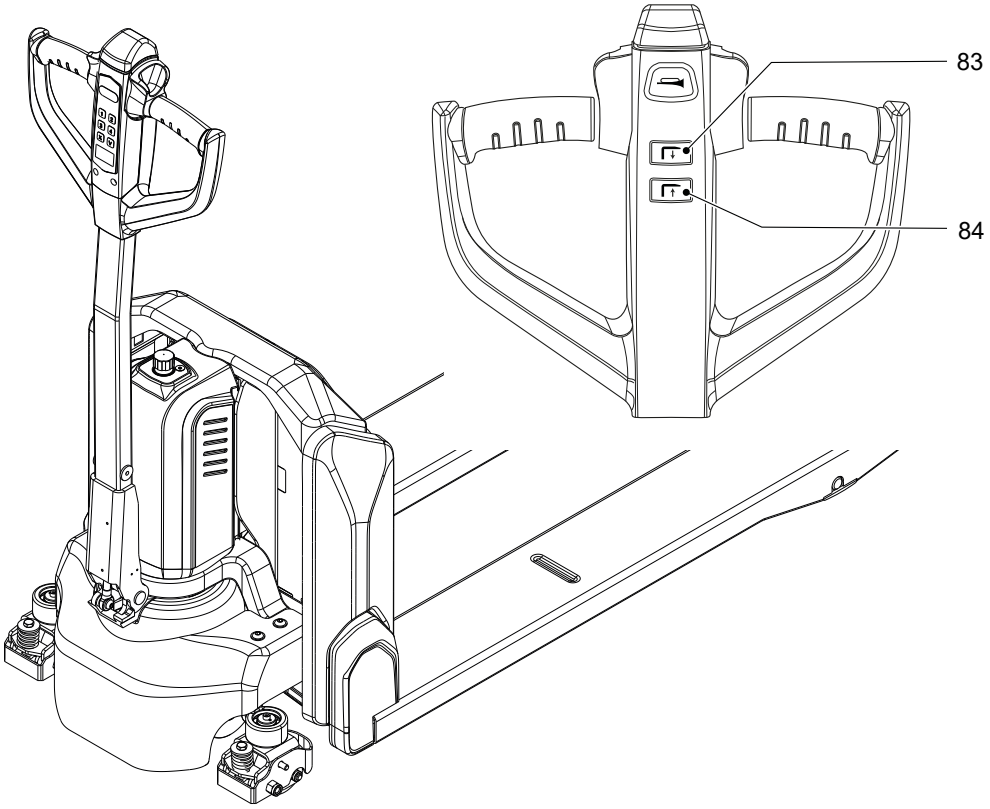


*Requirements*

– Load correctly palletised.
– The weight of the load corresponds to the capacity of the industrial truck.
– Load handler evenly loaded for heavy loads.

*Procedure*

- Drive the truck carefully up to the pallet.
- Slowly insert the load handler into the pallet until the fork shank touches the pallet.

➔ The load must not extend by more than 50 mm beyond the load handler tips.

- Press the "Lift" button (83) until you reach the desired lift height.

*The load is raised.*

**⚠ CAUTION!**

Release the button as soon as the load handler reaches its end stop.

### 4.7.2 Transporting a load

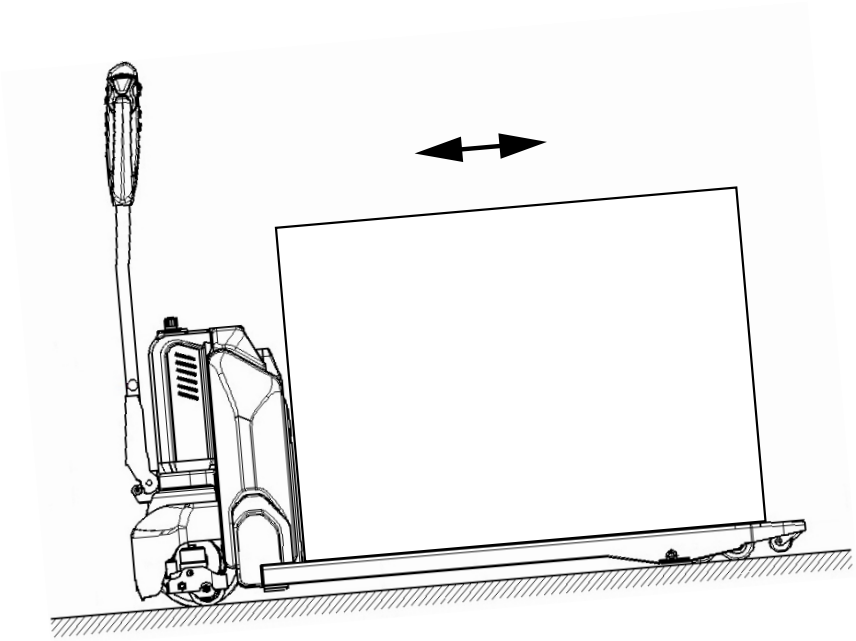

**Last transportieren**

*Requirements*

– Last ordnungsgemäß aufgenommen.
– Einwandfreie Bodenbeschaffenheit.

*Procedure*

- Accelerate and decelerate with care.
- Adapt your travel speed to the conditions of the route and the load you are transporting.
- Travel at a constant speed.
- Be prepared to brake at all times.
  - Brake gently in normal circumstances.
  - Only stop abruptly in hazardous situations.
- Watch out for other traffic at crossings and passageways.
- You must use a lookout at blind spots.
- Do not travel across or at an angle on inclines. Do not turn on slopes and inclines, and always drive with the load facing uphill.

### 4.7.3 Depositing a load

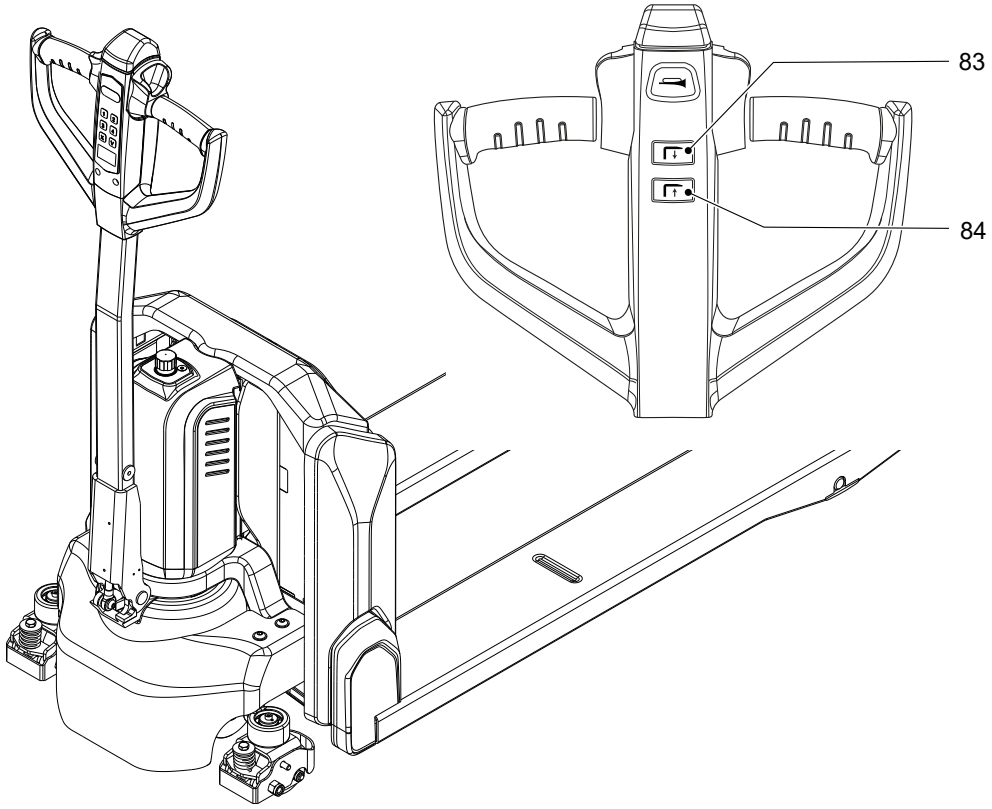


**⚠ CAUTION!**

Loads must not be deposited on traffic lanes or escape routes, in front of safety equipment or in front of operating equipment that must be accessible at all times.

***Depositing the load***

*Requirements*

– Storage location suitable for storing the load.

*Procedure*

- Drive carefully up to the storage location.
- Press the “Lower” button (84).
- Lower the load handler until it is clear of the load.
- Carefully remove the load handler from the pallet.

*The load is deposited.*

# 5 Troubleshooting

This chapter enables the operator to localize and rectify basic faults or the results of incorrect operation himself. When trying to locate a fault, proceed in the order shown in the remedy table.

➔ If, after carrying out the following remedial action, the truck cannot be restored to operation or if a fault in the electronics system is displayed with a corresponding error code, contact the manufacturer’s service department.
Troubleshooting must only be performed by the manufacturer’s customer service department. The manufacturer has a service department specially trained for these tasks.
In order for customer services to react quickly and specifically to the fault, the following information is essential:
- Truck serial number
- Event message from the display unit (if applicable)
- Error description
- Current location of truck.

| **Load cannot be lifted** | |
|---|---|
| **Cause** | **Remedy** |
| Load weight too high. | Only lift loads up to the maximum capacity, as specified on the type plate, see page 25. |
| Charge status of the battery is low. | Charge the battery, see page 54. |
| Contactor is faulty. | Contact the manufacturer's customer service department. |
| Hydraulic oil level is too low. | Check the hydraulic oil level and top up if necessary, see page 88. |
| Leak in hydraulic system. | Contact the manufacturer's customer service department. |

| **Hydraulic oil leaking from the breather filter** | |
|---|---|
| **Cause** | **Remedy** |
| Hydraulic oil level too high. | Check the hydraulic oil level and drain if necessary, see page 88. |

| Truck does not start | |
|---|---|
| **Cause** | **Remedy** |
| Battery still connected to the battery charger. | Fully charge the battery and disconnect the charger from the battery, see page 52. |
| Battery is not connected correctly. | Check that the battery is correctly attached and locked in place and adjust if necessary, see page 57. |
| Fuses faulty. | Check the fuses and replace if necessary, see page 99. |
| Battery charge status is too low. | Charge the battery, see page 52. |
| Emergency disconnect switch activated. | Release the emergency disconnect switch, see page 70. |
| Tiller in travel zone "F". | Move tiller to brake zone "B", see page 73. |

➔ Do not use the emergency disconnect switch as a service brake; otherwise, wear of the drive wheel will increase significantly.

# 6 Moving a truck without its own drive system

**⚠ WARNING!**

**Accidental truck movement**

When the brakes are de-activated the truck must be parked on a level surface, since the brakes are no longer effective.

▶Do not release the brake on slopes or inclines.

▶Do not park the truck with the brake released.

▶Apply the brake again when you reach your destination.

---

**Recovering the truck**

The truck can be moved without its own drive system only when the drive wheel brake is disassembled.

The brake may be disassembled and assembled only by authorised service personnel.

*Requirements*

– Truck cannot be moved with its own drive system.
– Emergency disconnect switch pressed – see page 70.
– Working area secured.

*Tools and Material Required*

– Lifting gear
– Crane lifting gear

*Procedure*

- Unload the truck.
- Secure the lifting gear to the attachment points – see page 27.
- Load the truck onto a suitable transport aid, secure it and transport it away, see page 29

*Truck has been recovered.*

# F Truck maintenance

## 1 Spare Parts

To ensure safe and reliable operation, use only the manufacturer's original spare parts.

The manufacturer’s original spare parts are consistent with the manufacturer’s specifications and guarantee the highest possible quality of safety, size accuracy and material.

The installation or use of non-original spare parts can negatively affect the specified properties of the product and impair safety. The manufacturer cannot be held liable for damage caused by the use of non-original spare parts.

The product-related electronic spare parts catalogue can be found at (www.jungheinrich.de/spare-parts-search) by entering the serial number.

➔ The serial number can be found on the data plate, see page 25.

The inspections and maintenance tasks listed in chapter "Maintenance, Inspection and Changing of Maintenance Parts Requiring Replacement" must be performed according to the defined service intervals – see page 103.

The manufacturer recommends the replacement of the maintenance parts also listed in chapter "Maintenance, Inspection and Changing of Maintenance Parts Requiring Replacement" according to the specified replacement intervals – see page 103.

**⚠ WARNING!**

**Risk of accidents and component damage**

Any modification to the truck, in particular the safety mechanisms, is prohibited.

**Exception:** Operating companies should only make changes or have changes made to powered industrial trucks if the manufacturer is no longer operating in the field and there is no successor to the business; operating companies must however:

- Ensure that the changes to be made are planned, tested and performed by a specialist engineer in industrial trucks taking safety into account.
- Keep permanent records of the construction, tests and completion of changes
- Carry out and have authorised the respective changes to the capacity data plates, decals and stickers as well as the operating instructions and workshop manuals
- Attach a permanent and clearly visible marking to the truck indicating the types of changes made, the date of the changes and the name and address of the organisation responsible for the work.

➔ On completion of inspection and service work, carry out the operations listed in the “Recommissioning the truck after cleaning or maintenance work section, see page 100.

# 3 Maintenance Safety Regulations

**Maintenance and repair personnel**

The manufacturer has a customer service department specially trained for these tasks. A maintenance contract with the manufacturer will support trouble-free operation.

Truck maintenance, repair work and changing of parts requiring replacement must only be carried out by specialist personnel. The activities to be carried out are divided into the following target groups.

**Customer Services**

Customer Services are specially trained in the use of the truck and are able to carry out maintenance and repairs independently. Customer Services are aware of the relevant standards, guidelines and safety regulations as well as potential risks.

**Operating company**

The maintenance personal of the operating company has the technical expertise and experience to perform the activities in the maintenance check list for the operating company. The maintenance and repair work to be performed by the operating company are also written down, see page 83.

## 3.1 Working on the electrical system

**⚠ WARNING!**

**Electrical current can cause accidents**

Make sure the electrical system is voltage-free before starting work on it. The capacitors in the controller must be completely discharged. The capacitors are completely discharged after approximately 10 minutes. Before starting maintenance on the electrical system:

- ▶ Only suitably trained electricians may operate on the truck's electrical system.
- ▶ Before working on the electrical system, take all precautionary measures to avoid electric shocks.
- ▶ Park the truck securely (see page 66).
- ▶ Disconnect the battery.
- ▶ Remove any rings, metal wrist bands etc.

## 3.2 Consumables and used parts

**⚠ CAUTION!**

**Consumables and used parts are an environmental hazard**

Used parts and consumables must be disposed of in accordance with the applicable environmental-protection regulations. Oil changes should be carried out by the manufacturer's customer service department, whose staff are specially trained for this task.

▶ Note the safety regulations when handling these materials.

## 3.3 Wheels

**⚠ WARNING!**

**The use of wheels that do not match the manufacturer's specifications can result in accidents**

The quality of wheels affects the stability and performance of the truck.

Uneven wear reduces truck stability and increases the stopping distance.

▶ After replacing wheels, make sure the truck is not skewed.

▶ Always replace wheels in pairs, i.e. left and right at the same time.

➔ When replacing wheels fitted at the factory, only use the manufacturer’s original spare parts. Otherwise the truck's rated performance cannot be ensured, see page 83.

## 3.4 Hydraulic system

**⚠ WARNING!**

**Leaky hydraulic systems can result in accidents**

Hydraulic oil can escape from leaky and faulty hydraulic systems.

▶ Report any defects immediately to your supervisor.

▶ Mark defective truck and take out of service.

▶ Do not return the industrial truck to service until you have identified and rectified the fault.

▶ Remove any spilled hydraulic immediately with an appropriate bonding agent.

▶ The bonding agent / consumable mixture must be disposed of in accordance with regulations.

## 3.5 Energy saving components

**⚠ CAUTION!**

**Risk of accidents due to energy saving components**

The tiller contains components that store mechanical energy. Improper opening may result in an accident.

▶ Do not dismantle the tiller.

▶ The tiller may only be dismantled by authorised service personal.

# 4 Lubricants and Lubrication Schedule

## 4.1 Handling consumables safely

### Handling consumables

Consumables must always be handled correctly. Follow the manufacturer's instructions.

**⚠ WARNING!**

**Improper handling is hazardous to health, life and the environment**

Consumables can be flammable.

- ▶ Keep consumables away from hot components and naked flames.
- ▶ Always keep consumables in prescribed marked containers.
- ▶ Always fill consumables in clean containers.
- ▶ Do not mix up different grades of consumable. The only exception to this is when mixing is expressly stipulated in the Operating Instructions.

**⚠ CAUTION!**

**Spilled consumables can cause slipping and endanger the environment**

Risk of slipping from spilled consumables. The risk is greater when combined with water.

- ▶ Do not spill consumables.
- ▶ Spilled consumables must be removed immediately with an appropriate bonding agent.
- ▶ The bonding agent / consumable mixture must be disposed of in accordance with regulations.

**⚠ WARNING!**

**Improper handling of oils can be hazardous**

Oils (chain spray / hydraulic oil) are flammable and poisonous.

- ▶ Dispose of used oils in accordance with regulations. Store used oil safely until it can be disposed of in accordance with regulations.
- ▶ Do not spill oil.
- ▶ Spilled oils must be removed immediately with an appropriate bonding agent.
- ▶ The mixture consisting of the bonding agent and oil must be disposed of in accordance with regulations.
- ▶ Observe national regulations when handling oils.
- ▶ Wear safety gloves when handling oils.
- ▶ Prevent oil from coming into contact with hot motor parts.
- ▶ Do not smoke when handling oil.
- ▶ Avoid contact and digestion. If you swallow oil do not induce vomiting but seek medical assistance immediately.
- ▶ Seek fresh air after breathing in oil fumes or vapours.
- ▶ If oil has come into contact with your skin, rinse your skin with water.
- ▶ If oil has come into contact with your eyes, rinse them with water and seek medical assistance immediately.
- ▶ Replace oil-soaked clothing and shoes immediately.

**⚠ CAUTION!**

**Consumables and used parts are an environmental hazard**

Used parts and consumables must be disposed of in accordance with the applicable environmental-protection regulations. Oil changes should be carried out by the manufacturer's customer service department, whose staff are specially trained for this task.

▶Note the safety regulations when handling these materials.

## 4.2 Lubrication Schedule

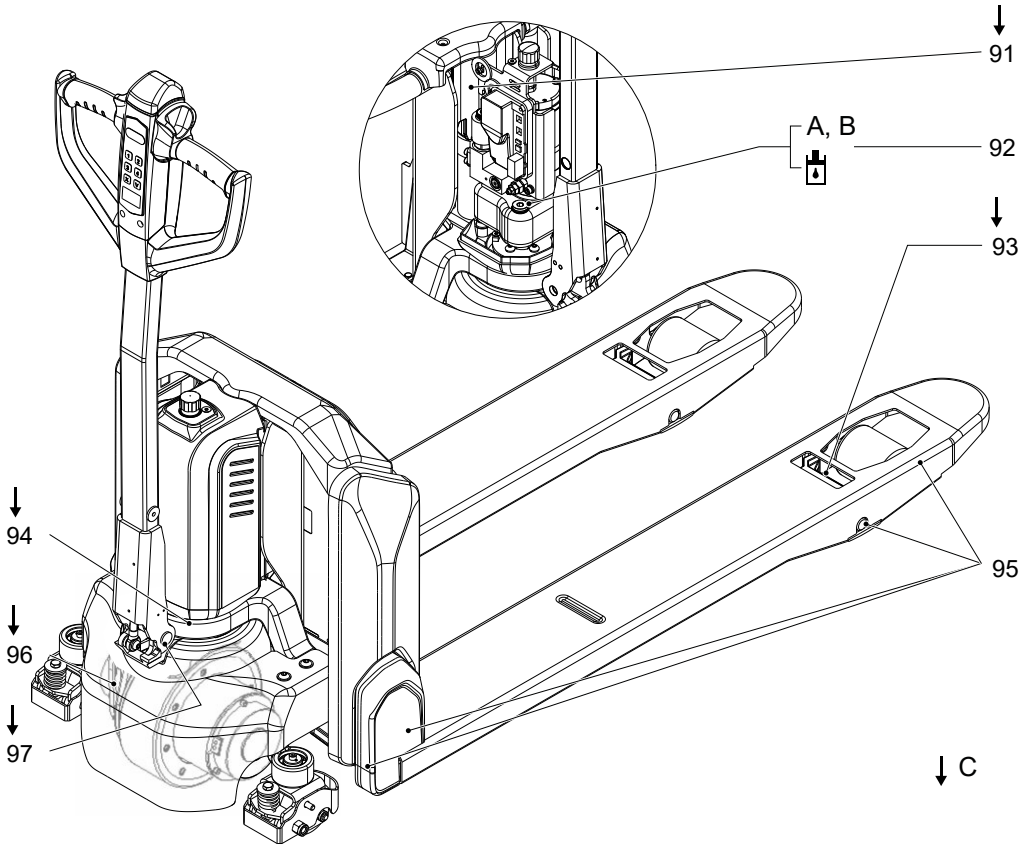


| Item | Component | Item | Component |
|---|---|---|---|
| 91 | Lift cylinder (⬇) | 95 | Lift kinematics (⬇) |
| 92 | Filler plug for hydraulic oil (⍈) | 96 | Transmission (⬇) |
| 93 | Load wheel bearing (⬇) | 97 | Tiller bolt (⬇) |
| 94 | Tiller bearing (⬇) | | |

***Lubricate the truck according to the lubrication schedule***

*Requirements*

– Truck parked securely – see page 66.
– Truck prepared for maintenance and repair work – see page 90.
– Maintenance interval reached – see page 103.

*Tools and Material Required*

– Lubricants according to lubrication schedule – see page 89

*Procedure*

- Lubricate the lubrication points (⬇) according to the lubrication schedule.

➔ Some lubrication points are only lubricated when required.

- Check the hydraulic oil level and top up if necessary (⛽) – see page 98.
- Start up the truck – see page 100.

*Truck is lubricated.*

## 4.3 Consumables

| Code | Order no. | Description | Used for | Volume |
|---|---|---|---|---|
| A | 51207593 | Hydraulic oil HVLP 32, DIN 51524 | Hydraulic system -5 °C...+25 °C [1] | 0,4 l |
| B | 50459855 | Hydraulic oil HLP 46, DIN 51524 | Hydraulic system > 25 °C [1] | 0,4 l |
| C | 29200430 | Lubricating grease DIN 51825 | Various bearing points | As required |

[1] Ambient temperature

# 5 Maintenance and repairs

## 5.1 Preparing the truck for maintenance and repair work

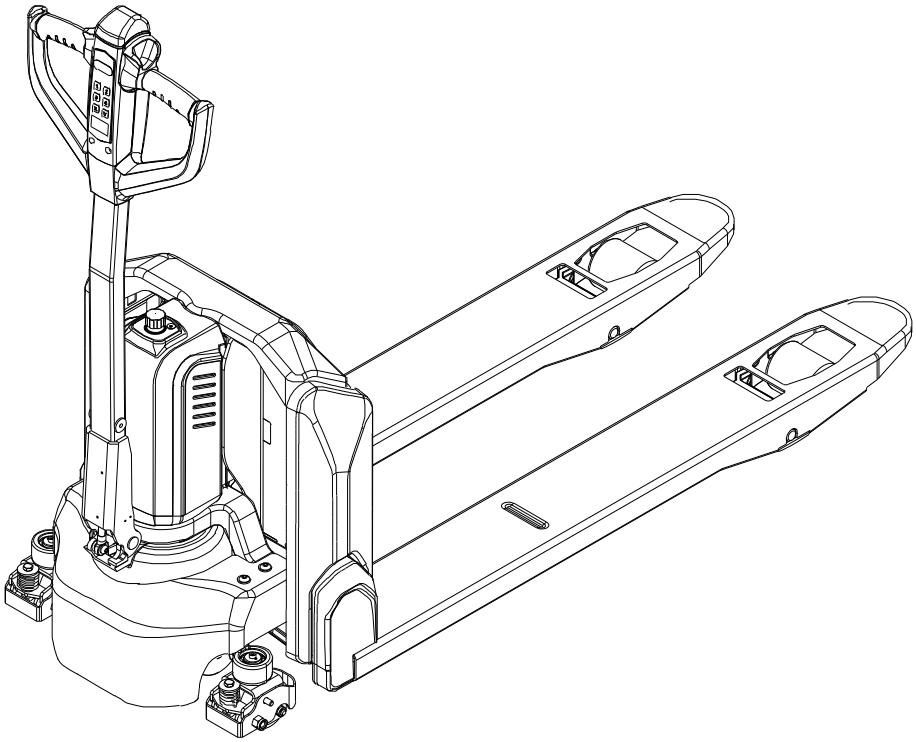

*Procedure*

- Unload the truck.
- Park the truck securely – see page 66.
- Disconnect the battery – see page 56.

## 5.2 Lifting and jacking up the truck safely

**⚠ WARNING!**

**Risk of accidents when working under the load handler and lift truck**

- ▶ When working under a raised load handler or a raised truck, secure them to prevent the truck from lowering, tipping or sliding away.
- ▶ When raising the truck, follow the instructions, see page 27. When working on the parking brake, prevent the truck from accidentally rolling away (e.g. with wedges).

**⚠ WARNING!**

**Lifting and jacking up the truck safely**

In order to raise the truck, the lifting gear must only be secured to the points specially provided for this purpose.

In order to raise and jack up the truck safely, proceed as follows:

- ▶ Jack up the truck only on a level surface and prevent it from moving accidentally.
- ▶ Always use a jack with sufficient capacity. When jacking up the burden carrier, take appropriate measures to prevent it from slipping or tipping over (e.g. wedges, wooden blocks).
- ▶ In order to raise the truck, the lifting accessories must only be secured to the points specially provided for this purpose, see page 27.

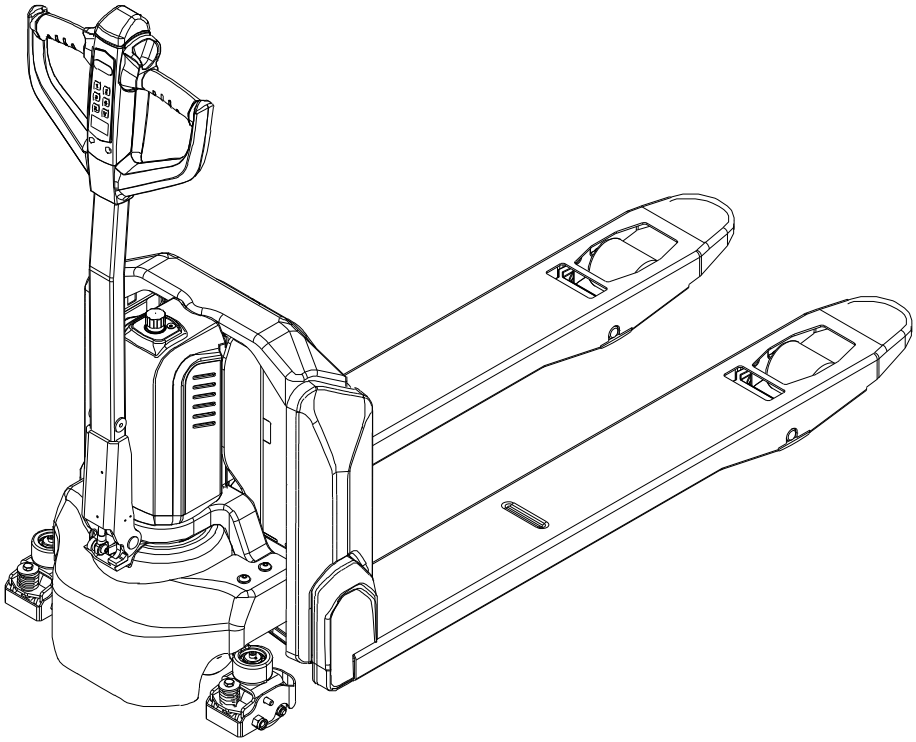

***Raising and jacking up the truck securely***

*Requirements*

– Prepare the truck for maintenance and repairs (see page 90).

*Tools and Material Required*

– Jack
– Hard wooden blocks

*Procedure*

• Place the jack against the contact point.

➔ For jacking the truck, make sure to use the structural parts of the truck as contact point for the jack (e.g. truck chassis).

• Raise the truck.
• Support the truck with hard wooden blocks.
• Remove the jack.

*The truck is now securely raised and jacked up.*

## 5.3 Disassembling or assembling the cover

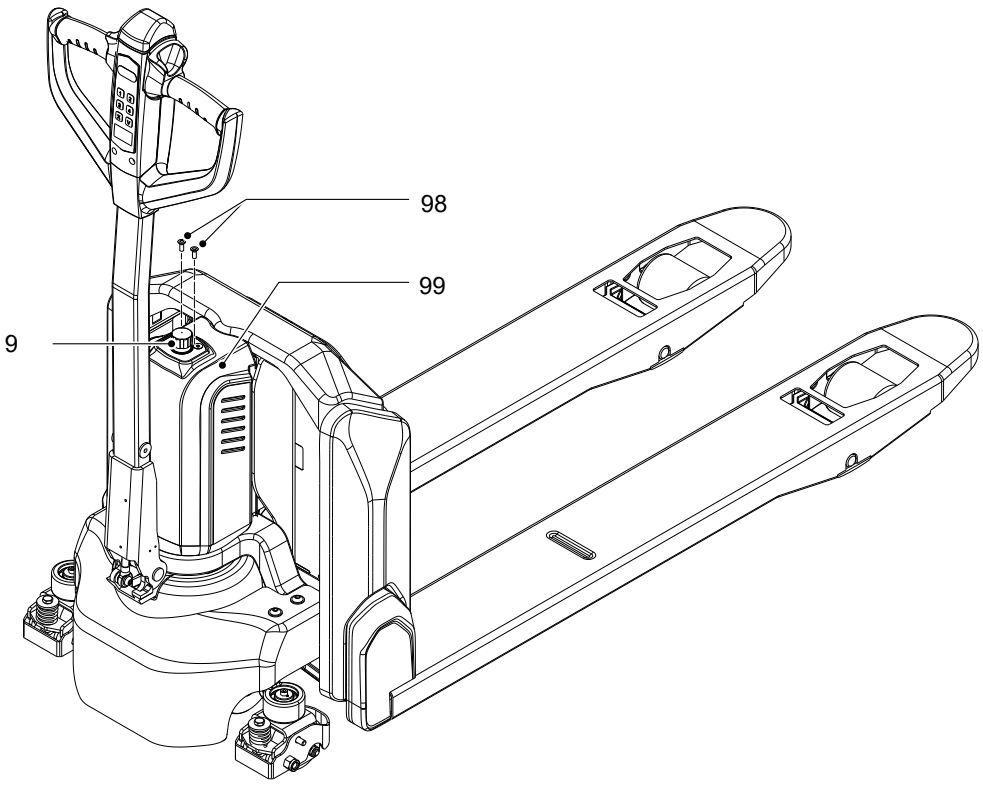


***Removing the cover for the hydraulic unit and electrical system***

*Requirements*

– The truck is parked securely, see page 66.

*Tools and Material Required*

– Allen key, key width 4 mm

*Procedure*

- Remove the 2 Allen screws (98).
- Lift off the cover (99) over the emergency disconnect switch (9) and set it down securely.

*Cover for the hydraulic unit and electrical system has been removed.*

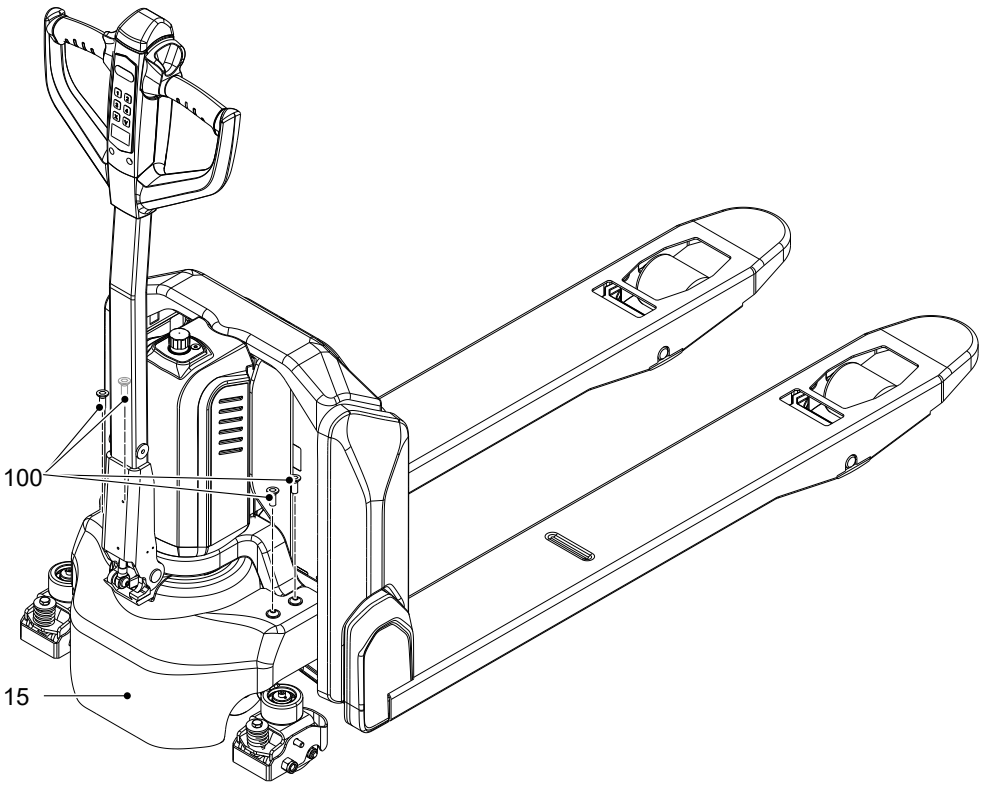


***Removing the bumper***

*Requirements*

– The truck is parked securely, see page 66.

*Tools and Material Required*

– Allen key, key width 6 mm

*Procedure*

- Remove the 2 Allen screws (100) on both sides of the bumper (15).
- Lift off the bumper and set it down securely.

*Bumper has been removed.*

## 5.4 Cleaning

### 5.4.1 Cleaning the truck

**⚠ CAUTION!**

**Fire hazard**

Do not use flammable liquids to clean the industrial truck.

▶ Always disconnect the battery before starting cleaning work.

▶ Carry out all necessary safety measures to prevent sparking before cleaning (e.g. by short-circuiting).

---

➔ Cleaning tasks may only take place in the designated locations, which adhere to the stipulations of the country of use.

***Cleaning the truck***

*Requirements*

– Truck prepared for maintenance and repair work, see page 90.

*Tools and Material Required*

– Water-based solvents
– Sponge or cloth

*Procedure*

- Clean the surface of the truck with water-based solvents and water. Use a sponge or cloth to clean.
- Dry the truck after cleaning, e.g. with compressed air or a dry cloth.
- Carry out all the tasks in the section "Recommissioning the truck after cleaning or maintenance work" (see page 100).

*The truck is now clean.*

### 5.4.2 Cleaning the electrical system assemblies

**NOTICE**

**Risk of electrical-system damage**

Cleaning the electronic system assemblies (controllers, sensors, motors etc.) with water can damage the electrical system.

▶ Do not clean the electrical system with water.

▶ Clean the electrical system with weak suction or compressed air (use a compressor with a water trap) and a non-conductive, anti-static brush.

***Cleaning the electrical system assemblies***

*Requirements*

– Truck prepared for maintenance and repair work – see page 90.

*Tools and Material Required*

– Compressor with water separator
– Non-conductive, antistatic brush

*Procedure*

- Expose the electrical system – see page 93.
- Clean the electrical system assemblies with weak suction or compressed air (use a compressor with a water separator) and a non-conductive, anti-static brush.
- Fit the electrical system cover – see page 93.
- Carry out all the tasks listed in the section "Recommissioning the truck after cleaning or maintenance work" – see page 100.

*The electrical-system assemblies are now clean.*

## 5.5 Checking the drive wheel and load wheels

➔ The drive wheel / load wheels and support wheels can be replaced either by authorised service personnel or by the owner of the industrial truck. The replacement instructions are delivered together with the spare parts package.

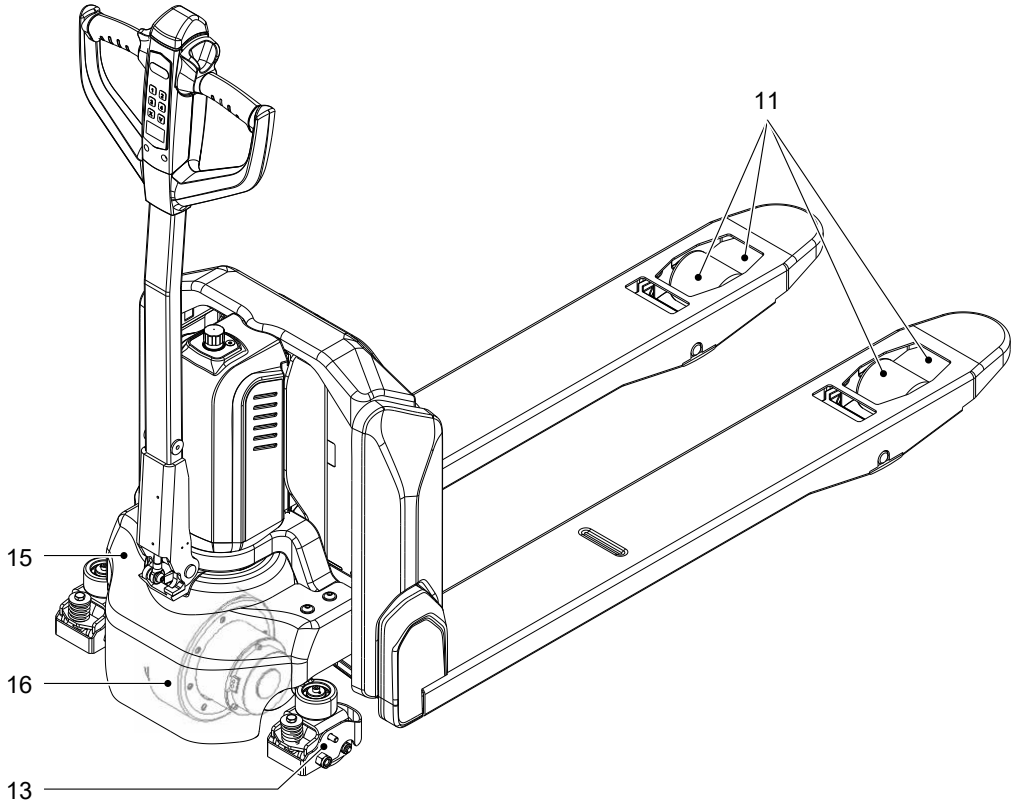


*Procedure*

- Remove the bumper (15) – see page 93.
- Check the drive wheel (16) for wear, damage and freedom of movement.
- Replace the drive wheel if one of the following statements applies:
  - The diameter of the drive wheel is ≤ 197 mm (new condition 210 mm).
  - The lining has only a residual thickness of ≤ 6,5 mm.
  - The drive wheel is no longer round.
- Check the load wheels (11) for wear, damage and freedom of movement.
- Replace all load wheels if necessary.
- Check the support wheels (13).
- Replace both support wheels if necessary.
- Fit the bumper.

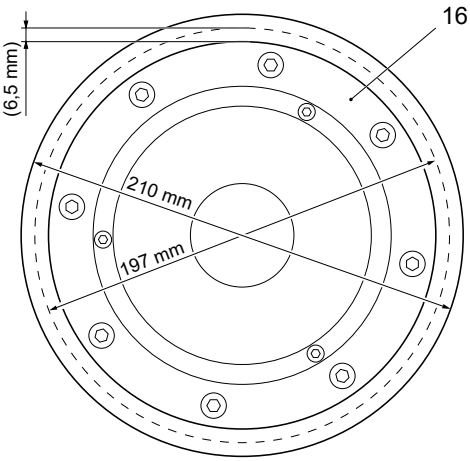

## 5.6 Checking the hydraulic oil level and refilling the hydraulic oil

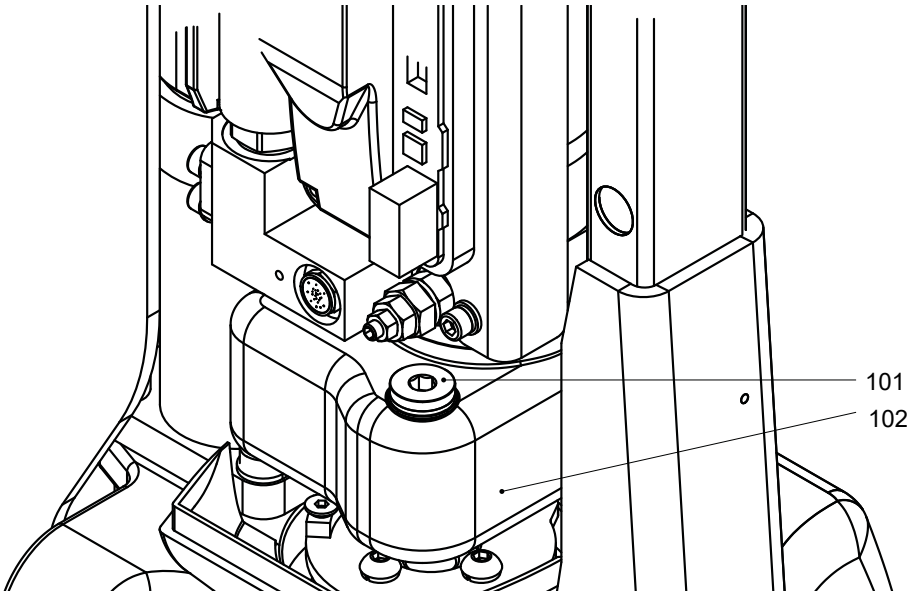


***Checking the hydraulic oil level and replenishing if necessary***

*Requirements*

– Load handler is fully lowered.
– Truck is prepared for maintenance and repair work, see page 90.

*Procedure*

- Remove the cover for the hydraulic unit, see page 93.
- Check the oil level in the hydraulic reservoir (102).

➔ When the load handler is fully lowered, the hydraulic oil level must be between the min and max markings.

- Add hydraulic oil if necessary:
  - Unscrew the cap (101) from the hydraulic reservoir (102).
  - Add hydraulic oil of the correct grade until the hydraulic oil level lies within the target range (see page 89).
  - Screw the cap (101) onto the hydraulic reservoir (102).
- Fit the cover onto the hydraulic unit, see page 93.
- Restore the truck to service after maintenance and repairs, see page 100.

*The hydraulic oil level is correct.*

➔ If a leak is detected in the hydraulic system, the truck must be decommissioned and repaired by specialist personnel.

## 5.7 Checking the electrical fuses

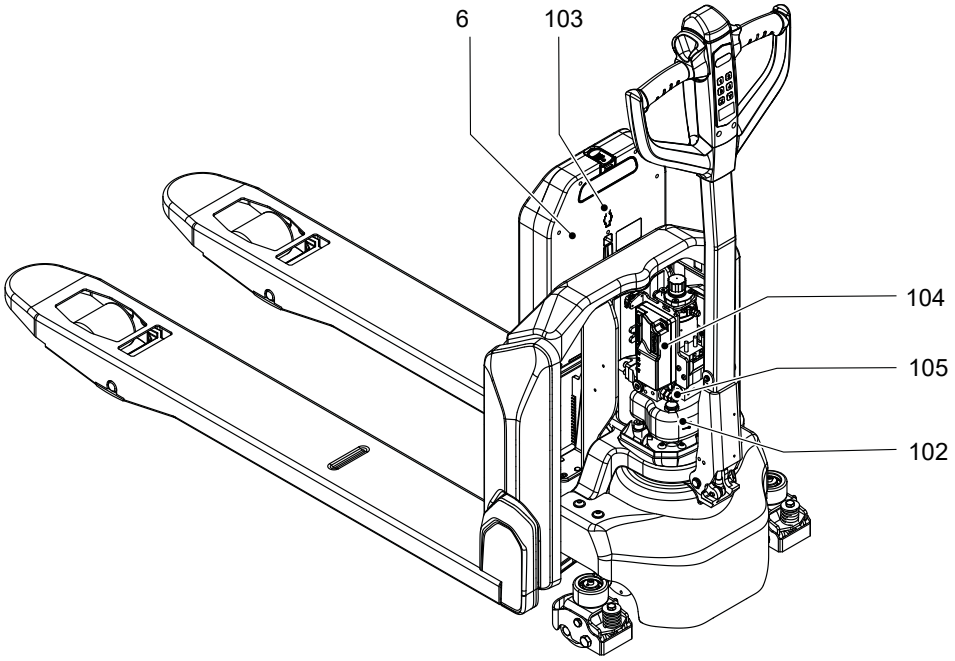


| Fuse | Rating | Installation location |
|---|---|---|
| FU1 (103)<br>Control circuit | 10 A | Between hydraulic reservoir (102) and controller (104) |
| FU 01 (105)<br>Battery | 70 A | On the reverse of the battery (6) |

***Checking electrical fuses***

*Requirements*

– Truck is prepared for maintenance and repair work, see page 90.
– Cover for the hydraulic unit and electrical system has been removed, see page 93.

*Procedure*

- Check fuse FU1 (103) for correct rating and condition, and replace if necessary.
- Fit the cover.
- Remove the battery (6), see page 56.
- Check fuse FU01 (105) for correct rating and condition, and replace if necessary.
- Install the battery, see page 57.

*The fuses have been checked.*

# 6 Restoring the truck to service after maintenance and repairs

*Procedure*

- Thoroughly clean the truck, see page 95.
- Lubricate the truck according to the lubrication diagram, see page 88.
- Charge the battery, see page 52.
- Start up the truck, see page 64.

➔ The manufacturer's customer service department is specially trained to carry out this task.

# 7 Decommissioning the industrial truck

If the truck is to be out of service for more than a month, it must be stored in a frost-free and dry room. All necessary measures must be taken before, during and after decommissioning as described hereafter.

When the truck is out of service it must be jacked up so that all the wheels are clear of the ground. This is the only way of ensuring that the wheels and wheel bearings are not damaged.

➔ Jack up the truck, see page 91.

If the truck is to be out of service for more than 6 months, agree further measures with the manufacturer's customer service department.

## 7.1 Prior to decommissioning

*Procedure*

- Park the truck securely, see page 66.
- Clean the truck, see page 95.
- Check the hydraulic oil level and replenish if necessary, see page 98.
- Apply a thin layer of oil or grease to any non-painted mechanical components.
- Lubricate the truck according to the lubrication diagram, see page 88.
- Charge the battery, see page 52.
- Drive the truck to the storage location and jack it up, see page 91.
- Remove the battery, see page 101.
- Check the battery charge at regular intervals, see page 101.

➔ Final de-commissioning or disposal of the truck in must be performed in accordance with the regulations of the country of use. In particular, regulations governing the disposal of batteries, consumables and electronic and electrical systems must be observed.

The truck must only be disassembled by trained personnel in accordance with the procedures as specified by the manufacturer.

## 7.2 Action to be taken during decommissioning

**NOTICE**

**Full discharge can damage the battery**

Self-discharge can cause the battery to fully discharge. Full discharge shortens the service life of the battery.

▶Before a long period of inactivity, the battery must be fully charged.

▶Charge the battery at least every 16 weeks, see page 52.

## 7.3 Restoring the truck to service after decommissioning

*Procedure*

- Thoroughly clean the truck, see page 95.
- Lubricate the truck according to the lubrication diagram, see page 88.
- Charge the battery, see page 52.
- Start up the truck, see page 64.

# 8 Safety tests to be performed at intervals and after unusual incidents

The truck must be inspected at least annually (refer to national regulations) or after any unusual event by a qualified inspector. The manufacturer offers a safety inspection service which is performed by personnel specifically trained for this purpose.

A complete test must be carried out on the technical condition of the truck with regard to safety. The truck must also be examined thoroughly for damage.

The operating company is responsible for ensuring that faults are rectified immediately.

# 9 Final de-commissioning, disposal

➔ Final de-commissioning or disposal of the truck in must be performed in accordance with the regulations of the country of use. In particular, regulations governing the disposal of batteries, consumables and electronic and electrical systems must be observed.

The truck must only be disassembled by trained personnel in accordance with the procedures as specified by the manufacturer.

# G Maintenance, Inspection and Changing of Maintenance Parts Requiring Replacement

**⚠ WARNING!**

**Lack of maintenance can result in accidents**

Failure to perform regular maintenance and inspections can lead to truck failure and poses a potential hazard to personnel and equipment.

▶ Thorough and expert maintenance and inspections are among the most important requirements for the safe operation of the industrial truck.

***NOTICE***

The application conditions of an industrial truck have a considerable impact on component wear. The following service, inspection and replacement intervals are based on single-shift operation under normal operating conditions. The intervals must be reduced accordingly if more stringent requirements are placed on the equipment, e.g., use in conditions of extreme dust, temperature fluctuations or multiple shifts.

▶ To prevent damage due to wear, the manufacturer recommends an on-site application analysis to agree on appropriate intervals.

The following chapter defines the tasks to be performed, the respective intervals to be observed and the maintenance parts for which replacement is recommended.

# 1 Maintenance Contents PTE 1.5 Li-Ion

Issued on: 2023-06-14 08:00

## 1.1 Owner

To be performed every 50 service hours, but at least once a week.

### 1.1.1 Maintenance contents

#### 1.1.1.1 Standard equipment

| Brakes |
|---|
| Test the brake. |

| Hydraulic operations |
|---|
| Correct the hydraulic-oil level. |

| Steering |
|---|
| Test the tiller return function. |

### 1.1.2 Inspection contents

#### 1.1.2.1 Standard equipment

The following points must be checked:

| Electrical system |
|---|
| Warning and safety equipment in accordance with the operating instructions |
| Functionality of display and controls |
| Test emergency disconnect switch and check for damage |

| Power supply |
|---|
| Check battery and battery components for damage |
| Battery connector for secure fit, functionality and damage |

| Chassis/structure |
|---|
| Check labels for legibility, completeness and plausibility |
| Check doors or covers for damage |

| Hydraulic operations |
|---|
| Test hydraulic system |
| Check fork arms or load handler for wear and damage |

#### 1.1.2.2 Optional Equipment

The following points must be checked:

## 1.2 Customer Service

In accordance with the PTE 1.5 Li-Ion service interval, to be performed every 1000 service hours, but at least once a year.

### 1.2.1 Maintenance contents

#### 1.2.1.1 Standard equipment

| Brakes |
|---|
| Test the brake. |
| Measure the air gap of the magnetic brake. |

| Electrical system |
|---|
| Adjust the microswitches. |
| Test key switch or alternative access system including the access rights. |
| Test the contactors and/or relays. |
| Perform insulation inspection. |
| Clean the motor with compressed air. |

| Power supply |
|---|
| Measure the battery voltage. |

| Hydraulic operations |
|---|
| Adjust the lift mechanism. |
| Correct the hydraulic-oil level. |
| Test and adjust the pressure relief valve. |

| Agreed services |
|---|
| Carry out a test run with the rated capacity or a customer-specific load. |
| Lubricate the truck according to the lubrication schedule. |
| Demonstration after maintenance. |

| Steering |
|---|
| Test the tiller return function. |

| Battery charger |
|---|
| Test the immobiliser on trucks with an on-board charger. |

### 1.2.2 Inspection contents

The following points must be checked:

#### 1.2.2.1 Standard equipment

| Electrical system |
|---|
| Cables and motor for secure fit and damage |
| Warning and safety equipment in accordance with the operating instructions |
| Functionality of display and controls |
| Test microswitches and check for damage |
| Test emergency disconnect switch and check for damage |

| Electrical system |
|---|
| Contactors and/or relays for wear and damage |
| Check electrical wiring for damage (insulation damage, connections) and check whether the fuse ratings are correct |
| Check carbon brushes for wear |
| Check connections and cables are securely attached and check for insulation damage and other signs of damage |

| Power supply |
|---|
| Check battery and battery components for damage |
| Battery latch and battery attachment for correct function and damage |
| Battery connector for secure fit, functionality and damage |

| Travel |
|---|
| Drive system bearings for wear and damage |
| Transmission for noise and leaks |
| Check wheels for wear, damage and secure mounting |
| Check wheel bearings and mounting of wheels for wear and damage |

| Chassis/structure |
|---|
| Check chassis connections and screw connections are securely attached and check for damage |
| Check labels for legibility, completeness and plausibility |
| Check doors or covers for damage |

| Hydraulic operations |
|---|
| Test hydraulic controls and check their labels for legibility, completeness and plausibility |
| Lift mechanism for wear, functionality and damage |
| Check cylinders and piston rods are securely attached and check for damage |
| Test hydraulic system |
| Check hydraulic connections, hoses and pipes are securely attached and check for leaks and damage |
| Check fork arms or load handler for wear and damage |
| Tie/plunger rods for uniform adjustment, wear and damage |

| Steering |
|---|
| Check the mechanical parts of the steering column for wear and damage |

### 1.2.3 Maintenance parts

The manufacturer recommends the replacement of the following maintenance parts at the specified intervals.

#### 1.2.3.1 Standard equipment

| maintenance part | service hours | months |
|---|---|---|
| Hydraulic system breather filter | 2000 | 12 |
| Hydraulic oil | 2000 | 12 |