SHC 5500
SERIES

Specifications

Heavy-Duty Walkie Stacker
Counterbalance

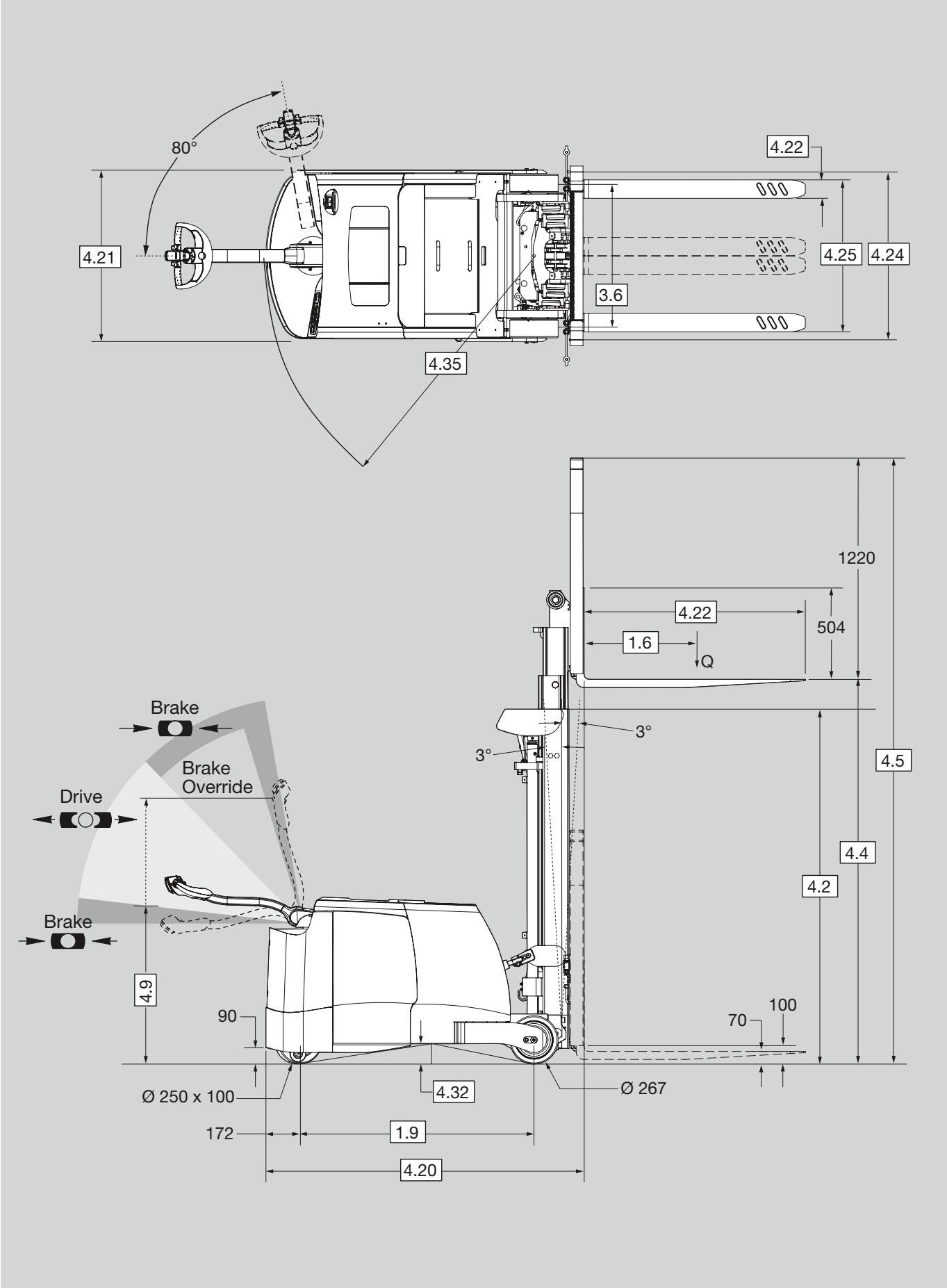
80°
4.22
4.21
4.25
4.24
3.6
4.35
1220
4.22
504
1.6
Q
3°
3°
4.5
4.4
4.2
Brake
Brake
Override
Drive
Brake
4.9
90
100
70
Ø 250 x 100
4.32
Ø 267
172
1.9
4.20

General Information	1.1	**Manufacturer**				**Crown Equipment Corporation**		
	1.2	**Model**				**SHC 5540-1.1**	**SHC 5540-1.35**	**SHC 5540-1.8**
	1.3	**Power**				electric		
	1.4	**Operator Type**				pedestrian		
	1.5	**Load Capacity**		Q	t	1.1 *	1.35	1.8
	1.6	**Load Centre**		c	mm	600		
	1.8	**Load Distance**	TL - Limited Free Lift	x	mm	223	223	233
			TF - Full Free Lift	x	mm	278	273	283
			TT - Triple Telescopic	x	mm	253	253	263
	1.9	**Wheelbase**		y	mm	1140	1310	1515
Weight	2.1	**Weight**	less battery		kg	see table 1	see table 2	see table 3
	2.2	**Axle Load**	w. load, front / rear		kg	see table 1	see table 2	see table 3
	2.3	**Axle Load**	w.o. load, front / rear		kg	see table 1	see table 2	see table 3
Tyres	3.1	**Tyre Type**				Poly		
	3.2	**Wheel Size**	front		mm	Ø 250 x 100		
	3.3	**Wheel Size**	rear		mm	Ø 267 x 102		Ø 267 x 127
	3.5	**Wheels**	number (x=driven) front / rear			1x / 2		
	3.6	**Track Width**	front	b_{10}	mm	central position		
	3.7	**Track Width**	rear	b_{11}	mm	800		825
Dimensions	4.2	**Mast**	collapsed height	h_1	mm	see table 1	see table 2	see table 3
	4.3	**Free Lift**		h_2	mm	see table 1	see table 2	see table 3
	4.4	**Lift Height**		h_3+h_{13}	mm	see table 1	see table 2	see table 3
	4.5	**Mast**	extended height	h_4	mm	see table 1	see table 2	see table 3
	4.9	**Tiller Arm Height [1]**	in drive position min./max.	h_{14}	mm	851 / 1328		
	4.15	**Fork Height**	lowered	h_{13}	mm	70		
	4.19	**Overall Length[2]**	TL - Limited Free Lift	l_1	mm	2450	2620	2835
			TF - Full Free Lift	l_1	mm	2505	2670	2885
			TT - Triple Telescopic	l_1	mm	2480	2650	2865
	4.20	**Length to fork face, Headlength[2]**	TL - Limited Free Lift	l_2	mm	1535	1705	1920
			TF - Full Free Lift	l_2	mm	1590	1755	1970
			TT - Triple Telescopic	l_2	mm	1565	1735	1950
	4.21	**Overall Width**		b_1	mm	940		990
	4.22	**Fork Dimension**	standard	thxwxl	mm	38 x 100 x 915		45 x 100 x 915
			optional lengths	l	mm	760, 990, 1065, 1145, 1220, 1370, 1525		
	4.24	**Fork Carriage Width**		b_3	mm	902		
	4.25	**Width Across Forks**		b_5	mm	203 - 838		
	4.32	**Ground Clearance**	centre wheelbase	m_2	mm	114		
	4.34	**Working Aisle Width**	1000x1200 traverse	A_{st}	mm	2900	3050	3280
			800x1200 length	A_{st}	mm	3000	3175	3380
	4.35	**Turning Radius**		Wa	mm	1320	1480	1670
Performance	5.1	**Travel Speed**	w. / w.o. load		km/h	4.8 / 4.8		
	5.2	**Lift Speed**	w. / w.o. load		m/s	0.16 / 0.31		
	5.3	**Lowering Speed**	w. / w.o. load		m/s	0.25 / 0.25		
	5.8	**Max. Gradeability**	w. / w.o. load 5 min. rating		%	10 / 10		
	5.10	**Service Brake**				Regenerative electric motor brake		
Motors	6.1	**Traction Motor**	rating at S2 60 min.		kW	2.0		
	6.2	**Lift Motor**	rating at S3 15%		kW	3.3		
	6.3	**Battery Compartment Size**		lxwxh	mm	338 x 841 x 630		
	6.4	**Battery Voltage**	nominal capacity 5h rating		V / Ah	24 / 625		
	6.5	**Battery Weight**	min. / max.		kg	445 / 635		
	8.1	**Type Controller**	drive			Transistor		
	10.7	**Sound Level**	L_{pAZ} acc. to EN 12053		dB(A)	66		

[1] Height values represent dimension from floor to center of thumbwheel on X10 handle
[2] Add 36 mm for Crown integrated sideshift
* 135 kg derate above 3045 mm lift

Table 1 Mast Chart

1.2	**Model**				**SHC 5540-1.1**											
	Mast Type				**TL**						**TF**					**TT**
2.1	**Weight [1]**	less battery		kg	2120	2140	2155	2180	2195	2205	2140	2160	2185	2205	2230	2285
2.2	**Axle Load [2]**	w. load	front	kg	775	775	775	775	770	770	690	685	685	680	680	705
			rear	kg	3200	3220	3245	3260	3275	3285	3310	3330	3360	3380	3405	3435
2.3	**Axle Load [2]**	w.o. load	front	kg	1570	1570	1570	1570	1570	1570	1535	1530	1530	1525	1525	1530
			rear	kg	1270	1290	1310	1330	1350	1355	1330	1350	1375	1405	1425	1470
4.2	**Mast**	collapsed height	h_1	mm	1960	2110	2265	2415	2540	2670	1960	2110	2265	2415	2540	1960
4.3	**Free Lift**	w. load backrest [3]	h_2	mm	150						735	845	1015	1165	1295	735
		w.o. load backrest [4]		mm							1320	1445	1600	1750	1875	1445
4.4	**Lift Height**		h_3+h_{13}	mm	**2895**	**3200**	**3505**	**3810**	**4060**	**4190**	**2970**	**3275**	**3580**	**3885**	**4140**	**4365**
4.5	**Mast**	extended height w. lbr [3]	h_4	mm	4115	4420	4725	5030	5285	5415	4195	4500	4805	5110	5360	5590
		extended height w.o. lbr [4]		mm	3480	3785	4090	4395	4650	4780	3610	3915	4220	4525	4780	4880

Table 2 Mast Chart

1.2	**Model**				**SHC 5540-1.35**											
	Mast Type				**TL**						**TF**					**TT**
2.1	**Weight [1]**	less battery		kg	2410	2425	2445	2470	2480	2490	2425	2450	2475	2495	2515	2575
2.2	**Axle Load [2]**	w. load	front	kg	965	965	965	965	965	965	885	880	880	875	875	900
			rear	kg	3525	3545	3565	3585	3600	3610	3625	3650	3680	3700	3725	3755
2.3	**Axle Load [2]**	w.o. load	front	kg	1795	1795	1795	1795	1795	1795	1765	1760	1760	1760	1755	1765
			rear	kg	1330	1350	1375	1395	1405	1415	1385	1405	1435	1460	1480	1530
4.2	**Mast**	collapsed height	h_1	mm	1960	2110	2265	2415	2540	2670	1960	2110	2265	2415	2540	1960
4.3	**Free Lift**	w. load backrest [3]	h_2	mm	150						735	845	1015	1165	1295	735
		w.o. load backrest [4]		mm							1320	1445	1600	1750	1875	1445
4.4	**Lift Height**		h_3+h_{13}	mm	**2895**	**3200**	**3505**	**3810**	**4060**	**4190**	**2970**	**3275**	**3580**	**3885**	**4140**	**4365**
4.5	**Mast**	extended height w. lbr [3]	h_4	mm	4115	4420	4725	5030	5285	5415	4195	4500	4805	5110	5360	5590
		extended height w.o. lbr [4]		mm	3480	3785	4090	4395	4650	4780	3610	3915	4220	4525	4780	4880

Table 3 Mast Chart

1.2	**Model**				**SHC 5540-1.8**								
	Mast Type				**TL**						**TF**		**TT**
2.1	**Weight [1]**	less battery		kg	2915	2935	2955	2975	2990	3000	2935	2960	3085
2.2	**Axle Load [2]**	w. load	front	kg	1170	1170	1170	1170	1170	1170	1080	1080	1105
			rear	kg	4295	4310	4330	4350	4370	4380	4400	4425	4525
2.3	**Axle Load [2]**	w.o. load	front	kg	2135	2135	2135	2135	2135	2135	2105	2105	2105
			rear	kg	1510	1535	1555	1575	1590	1595	1560	1585	1705
4.2	**Mast**	collapsed height	h_1	mm	1960	2110	2265	2415	2540	2670	1960	2110	1960
4.3	**Free Lift**	w. load backrest [3]	h_2	mm	150						735	845	735
		w.o. load backrest [4]		mm							1320	1445	1445
4.4	**Lift Height**		h_3+h_{13}	mm	**2895**	**3200**	**3505**	**3810**	**4060**	**4190**	**2970**	**3275**	**4365**
4.5	**Mast**	extended height w. lbr [3]	h_4	mm	4115	4420	4725	5030	5285	5415	4195	4500	5590
		extended height w.o. lbr [4]		mm	3480	3785	4090	4395	4650	4780	3610	3915	4880

[1] Add 45 kg for load backrest / Add 45 kg for sideshift
[2] Axle load for forks of 990 mm length and no sideshift configurations
[3] Includes 1220 mm highload backrest
[4] Without 1220 mm highload backrest

Standard Equipment

1. 24-volt electrical system
2. Crown's Access 1 2 3® Comprehensive System Control
3. Crown's Access 1 2 3® information display
   - 1 line display with 8 characters
   - Scrolling function via 5 button access
   - Three selectable performance levels
   - BDI with lift interrupt
   - Five hour meters
   - Event codes
   - Access 1 2 3® onboard diagnostics with real time troubleshooting capability
   - PIN code capability
4. AC traction and steer motors
5. Performance enhancing features
   - X10® Handle
   - Brake override
   - Electronic power steering
   - Ramp hold and speed control
   - High-visibility mast and carriage
   - Low profile power unit
   - Tool storage tray
   - Power boost
6. Poly high-capacity drive tyre - Ø 250 x 100 mm drive tyre
7. Polyurethane load wheels
   - Model SHC 5540-1.1 and SHC 5540-1.35: Ø 267 x 102 mm
   - Model SHC 5540-1.8: Ø 267 x 127 mm
8. InfoPoint® System
9. Steel power unit covers
10. Emergency power disconnect
11. Key switch
12. Horn
13. SBE 160 red battery connector
14. Reversing button
15. Electric park brake
16. Fork tip indicators
17. Battery compartment rollers

Optional Equipment

1. Work Assist® Accessories:
   - Clip pad
   - Amber strobe light
   - Accessory clamp
   - Work Assist tube
2. Sideshift with internal hosing 100 mm sideshift each direction - reduces capacity 140 kg
3. Bottlers Tilt option, 3 degrees back / 10 degrees forward to 885 mm lift height
4. Optional fork lengths (760, 990, 1065, 1145, 1220, 1370, 1525 mm)
5. Freezer Package (Continuous -29°C)
6. InfoLink® Ready
7. Load backrest 915 mm wide (915, 1065, 1220 mm height)
8. Travel Alarm
9. V-Force® Lithium-Ion Ready

Operator Controls

Crown's robust X10 handle places all control buttons in the optimum position for ease of operation with either hand and to minimise hand and wrist movements. An ergonomic forward/reverse thumb wheel allows for precise manoeuvring. The control hand grips are urethane covered for insulation from cold and vibration with integrated horn buttons for easy activation. The handle contains a safety button which reverses the direction of the truck should the button touch the operator.

A rabbit/turtle switch incorporates two levels of programmable travel performance so operators can select the setting that matches their experience level or application requirements.

Exclusive brake override feature allows slow speed travel with the handle near vertical. This feature improves manoeuvrability in tight areas.

Performance

The SHC 5500 Series incorporates the latest generation AC drive system enhanced with Access 1 2 3® technology. Crown's Access 1 2 3® technology continuously monitors truck systems and adjusts system parameters to deliver optimum performance and control. The Access Display provides a convenient interface for operators keeping them informed of any changes impacting truck performance and allowing them to choose from three performance profiles when enabled.

Programmable performance settings enable authorised personnel to tune the lift truck to different operator skill levels, or to meet specific application requirements. In addition, up to 25 PIN codes can be assigned to individual operators and matched to one of the pre-programmed performance profiles if desired.

Electronic power steering allows the operator to manoeuvre heavy loads in tight spaces throughout the day while minimising fatigue. Smooth travel and lift performance combine with excellent controls provided by the X10 handle to increase productivity.

The SHC 5500 Series features ramp hold and speed control to improve operation on small inclines or ramps. The ramp hold feature uses the motor to prevent truck movement when the brake is released and not travel command is present. The ramp speed control feature insures that actual travel speed matches requested travel speed. If the truck encounters an obstacle, a power boost feature delivers up to 15 percent more power than normally available for a full three seconds to overcome the obstruction.

Electrical System

A heavy-duty 24-volt fused electrical system utilises microprocessor controls for maximum energy efficiency, reduced maintenance and infinite speed control capability.

Access control modules for travel, lift and steer are sealed from dirt, dust and moisture for trouble-free operation. All contactors have been eliminated except for the main line contactor. A 160 amp battery connector with disconnect handle is standard.

Hydraulic System

Heavy-duty hydraulic motor (4.8 kW) is transistor controlled and matched with a gear type pump selected for optimum lift performance and low noise. Single-speed lift with programmable acceleration - deceleration and programmable two-speed lowering enables customisation to match operator preference or application requirements.

Cylinder rods are hard-plated chrome with polyurethane seals. Relief valve tuned to capacity protects all components in the hydraulic system. Reservoir incorporates and in-tank 10 micrometer return filter for removing debris from oil.

Drive Unit / Brake

Heavy-duty gearbox with helical spur input gear for quiet operation.

Regenerative motor braking is activated under a downhill condition, during plugging or when the directional control is returned to neutral. An electro-magnetic brake, spring applied and electrically released, is mounted on top of the drive motor. The electro-magnetic brake serves as the parking brake and applies when the control handle position removes from the operating zone to brake zone during truck operation.

Power Steering

Electronic power steering is provided by a heavy-duty AC motor that pivots the drive unit when steer tiller movement is detected.

Mast

Crown-manufactured three-stage mast assembly utilises a "flush-face" interlocked I-beam design to improve visibility and reduce truck length. Roller bearing studs are welded on both sides of the rails for maximum strength and roller bearings are canted to run in the thick cross section of the rail. High strength steel mast sections with sealed-for-life rollers are constructed for low mast deflection and high rigidity. The bars wrap around the rails for added strength and to resist off-center load forces.

"In-line" hose routing opens up visibility. Cylinders are placed behind the rails to create a high visibility design. The mast has four points of attachment to the truck for good load force distribution. Two mounting points are at the frame, where tilt cylinders attach. Tilt cylinders use spherical bushings to resist off-center load distortions. Two large diameter spherical bearings secure the mast to the drive units.

The Crown-manufactured mast offers quiet lift transition through staging while lifting and lowering. Anti-rattle devices reduce mast noise when traveling on uneven surfaces.

A range of mast types are available:

- TL offers maximum visibility through the mast by eliminating the inner free lift cylinder.
- TF offers widest visibility window with full free lift capability.
- TT offers maximum flexibility with full free lift capability.

Serviceability / Durability

The Access display simplifies service for technicians by providing advanced diagnostics without the need for separate handsets. The display allows the technician to view event service codes and truck hours when event occurred, perform system calibrations or functional tests of components, and make necessary adjustments. Crown's InfoPoint® System compliments Access 1 2 3® diagnostics by providing a Quick Reference Guide, on-truck component maps and information nuggets to further simplify troubleshooting. All wiring is color coded.

Removable steel power unit doors are hinged for ease of opening providing excellent accessibility to the distribution panel and all other components. Steel covers provide added protection to critical internal components.

Removable steel battery covers and hinged cover allow easy access to the battery. Battery removal can be accomplished from either side. Battery compartment rollers are standard.

Removable steel frame extension top and front covers allow easy access to the hydraulic system and other components.

The X10 handle incorporates a vacuum die cast process using high-grade aluminum and benefits from structural webbing for maximum strength and durability.

Safety Regulations

Conforms to European safety standards. Dimensions and performance data given may vary due to manufacturing tolerances. Performance is based on an average size vehicle and is affected by weight, condition of truck, how it is equipped and the conditions of the operating area. Crown products and specifications are subject to change without notice.

SHC 5500 SPEC GB 07/20, 10
M03620-006-00
Printed in Germany

ISO 9001 Quality Management System certified for the design, development, manufacture, sale and product support of industrial trucks.

European Manufacturing:
Crown Gabelstapler GmbH & Co. KG

Продавец:
kupit-shtabeler.ru
+7 495 159-44-32
zakaz@kupit-shtabeler.ru