kupit-shtabeler.ru

HELI

# CBD15J-(D)Li

# 步行式电动搬运车

# Walking Electric Pallet Truck

零件目录 Parts Manual

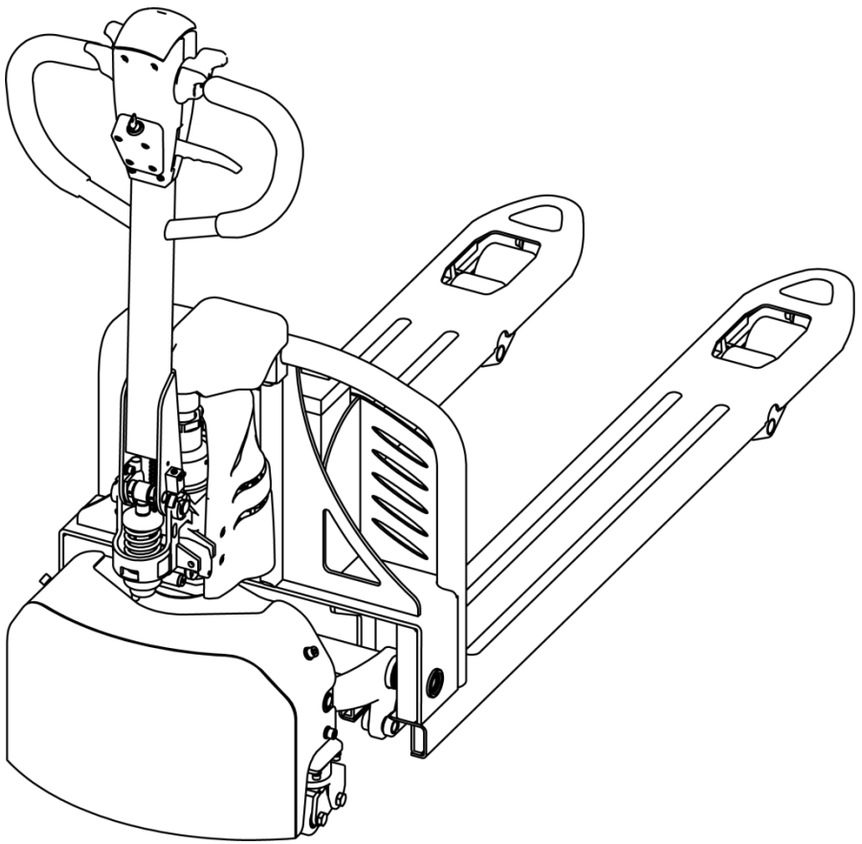

20210522 V05

kupit-shtabeler.ru

# 目录 Content

**1. 车身系统 Body System**

1.1 车架系统 Frame System..... 1

1.2 连杆摇臂组件 Connecting Rod Rocker Assembly..... 2

**2. 驱动系统 Driving System**

2.103 驱动系统（电动）Driving System（Full Electric）..... 4

2.202 驱动系统（手动）Driving System（Hand Lowering）..... 6

2.3 驱动总成 Driving Assembly..... 8

2.401 辅助轮组件 Balance Wheel Assembly..... 10

**3. 操作系统 Operating System**

3.1 手柄组件 Handle Components..... 11

**4. 液压系统 Hydraulic System**

4.1 电动油缸 Electric Cylinder..... 13

4.2 手动油缸 Hand Cylinder..... 15

**5. 电器系统 Electric System**

5.101 电器总成 Electric Assembly..... 17

kupit-shtabeler.ru

5.2 电缆总成 Cable Assembly..... 18

kupit-shtabeler.ru

# 修订记录

| 版　　本 | 修订人 | 修订事项 |
|---|---|---|
| 20200316 V01 | 蒋连杰 | 首次发布； |
| 20200703 V02 | 蒋连杰 | ①：2.101 代码 02.YYL.2330 起升油管更改为代码 02.YYL.3868 起升油管; |
| 20200820 V03 | 沈培彦 | ①：2.102 代码 03.02360 螺钉 M5×10、代码 02.FGJ.02201 提升电机罩更换为代码 03.0226 螺钉 M5×12、代码 02.FGJ.3447 电机罩；<br>②：2.102 新增代码 03.0157 螺钉 M8×30、代码 03.0012 弹垫Φ8、代码 30.20.0004 电机罩安装板左、代码 30.20.0005 电机罩安装板右；<br>③：2.102 代码 33.033.0003 底座支架更改为代码 40.14.011 轴承座支架；<br>④：2.102 取消代码 03.0123 螺钉 M4×10、代码 03.0008 弹垫Φ4、代码 03.00491 平垫Φ4、代码 02.FGJ.0221 挡泥板；<br>⑤：2.102 新增代码 30.44.071 下罩、代码 03.0050 平垫Φ8、代码 03.0012 弹垫Φ8、代码 03.0154 螺钉 M8×20；<br>⑥：2.102 代码 33.033.0014 连接套更改为代码 33.033.0001 连接套；<br>⑦：2.201 代码 33.033.0003 底座支架更改为代码 40.14.011 轴承座支架；<br>⑧：2.201 代码 33.033.0014 连接套更改为代码 33.033.0001 连接套；<br>⑨：2.201 取消代码 30.0123 内六角圆柱头螺钉 M4×10、代码 03.0008 弹性垫圈Φ4、代码 03.00491 平垫圈Φ4、代码 02.FGJ.0221 挡泥板；<br>⑩：2.201 新增代码 30.44.071 下罩、代码 03.0050 平垫Φ8、代码 03.0012 弹垫Φ8、代码 03.0154 螺钉 M8×20； |
| 20210125 V04 | 沈培彦 | ①：2.103 代码 81.005.002 辅助轮组件更改为代码 81.005.023 辅助轮组件；<br>②：2.202 代码 81.005.002 辅助轮组件更改为代码 81.005.023 辅助轮组件；<br>③：2.401 代码 30.01.6685 轮架更改为代码 40.11.048 轮架，新增代码 40.11.082 轮架套； |
| 20210522 V05 | 沈培彦 | ①：5.101 代码 02.KZQ.2151 控制器 1212P 更改为代码 02.KZQ.2167 控制器 1212P；<br>②：版本格式整体调整； |

kupit-shtabeler.ru

## 1.车身系统 Body System
## 1.1 车架系统 Frame System

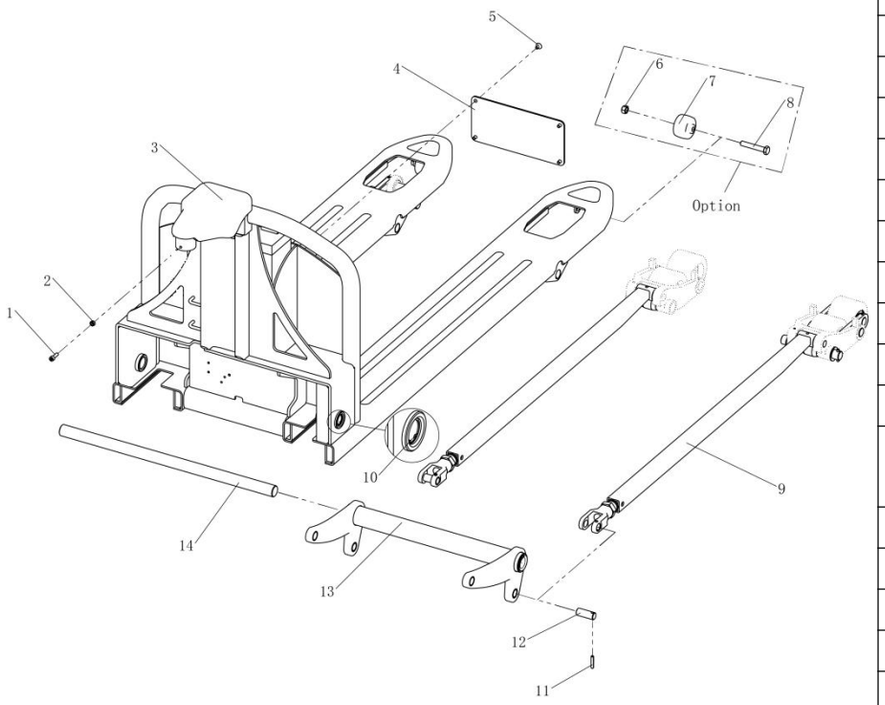


| 序号 Item | | 代码 Part No | 名称 Description | | 数量 Qty | 适用日期 Applied Date | 备注 Remark |
|---|---|---|---|---|---|---|---|
| 1 | | 03.0149 | 螺钉 M6×20 | Screw | 1 | | |
| 2 | | 03.0257 | 螺母 M6 | Nut | 1 | | |
| 3 | | 33.030.0013 | 车架(550) | Frame | 1 | | |
| 3 | | 33.030.0010 | 车架(685) | Frame | 1 | | |
| 3 | | 33.030.0021 | 车架(550)低放 | Frame Low Release | 1 | | Option |
| 3 | | 33.030.0022 | 车架(685)低放 | Frame Low Release | 1 | | Option |
| 4 | | 30.02.045 | 前封板 | Front Seal Plate | 1 | | |
| 5 | | 03.0087 | 螺钉 M6×10 | Screw | 4 | | |
| 6 | | 03.0243 | 螺母 M10 | Nut | 2 | | Option |
| 7 | | 30.28.0137 | 滚子 | Roller | 2 | | Option |
| 7 | | 30.28.0153 | 滚子(低放) | Roller(Low Release) | 2 | | Option |
| 8 | | 03.1088 | 螺栓 M10×60 | Bolt | 2 | | Option |
| 9 | | 82.45.0006 | 推杆组件 | Push Rod Assembly | 1 | | |
| 9 | | 82.45.0012 | 推杆组件(低放) | Push Rod Assembly (Low Release) | 1 | | Option |
| 10 | | 03.0024 | 孔用挡圈Φ25 | Circle For Hole | 2 | | |
| 11 | | 03.0305 | 圆柱销Φ5×30 | Cylindrical Pin | 2 | | |
| 12 | | 30.01.6569 | 小轴 | Small Axis | 2 | | |
| 13 | | 82.45.0004 | 圆环棒组件(550) | Ring Rod Assembly | 1 | | |
| 13 | | 82.45.0003 | 圆环棒组件(685) | Ring Rod Assembly | 1 | | |
| 13 | | 82.45.0014 | 圆环棒组件(550)低放 | Ring Rod Assembly Low Release | 1 | | Option |
| 13 | | 82.45.0015 | 圆环棒组件(685)低放 | Ring Rod Assembly Low Release | 1 | | Option |
| 14 | | 30.01.3311 | 支撑轴(550) | Back Shaft | 1 | | |
| 14 | | 30.28.0089 | 支撑轴(685) | Back Shaft | 1 | | |
| | | | | | | | |
| | | | | | | | |

## 1.2 连杆摇臂组件 Connecting Rod Rocker Assembly

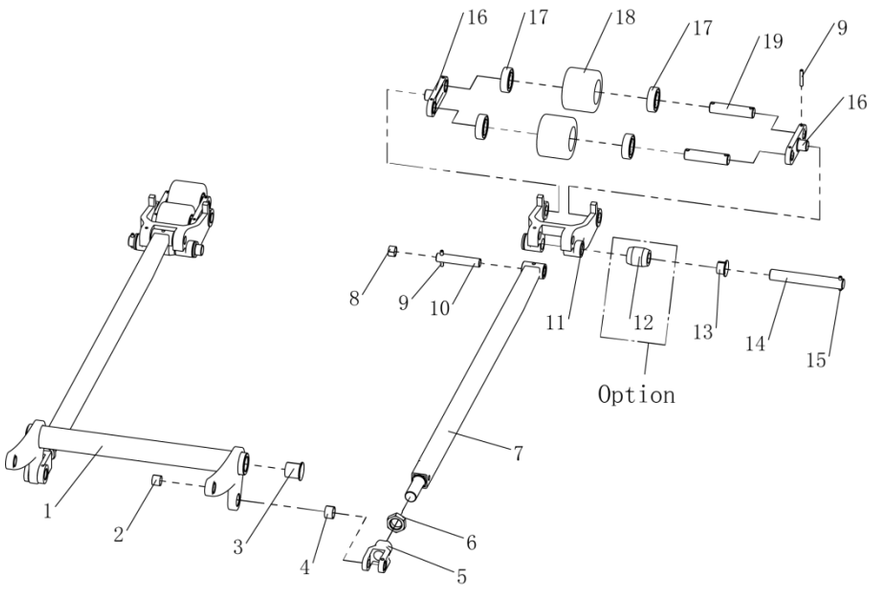


| 序号 Item | | 代码 Part No | 名称 Description | | 数量 Qty | 适用日期 Applied Date | 备注 Remark |
|---|---|---|---|---|---|---|---|
| 1 | | 33.030.0004 | 圆环棒(550) | Ring Rod Assembly | 1 | | |
| 1 | | 33.030.0007 | 圆环棒(685) | Ring Rod Assembly | 1 | | |
| 1 | | 33.030.0023 | 圆环棒(550)低放 | Ring Rod Assembly Low Release | 1 | | Option |
| 1 | | 33.030.0024 | 圆环棒(685)低放 | Ring Rod Assembly Low Release | 1 | | Option |
| 2 | | 03.1000 | 复合套 | Composite Set | 2 | | |
| 3 | | 03.04422 | 带肩复合套 | Composite Set With Shoulder | 2 | | |
| 4 | | 03.0691 | 复合套 | Composite Set | 2 | | |
| 5 | | 30.01.6601 | 推杆叉 | Push Rod Bracket | 2 | | |
| 6 | | 03.0286 | 螺母 M22×1.5 | Nut | 2 | | |
| 7 | | 33.030.0016 | 推杆 | Push Rod Welding | 2 | | |
| 7 | | 33.030.0025 | 推杆(低放) | Push Rod Welding (Low Release) | 2 | | Option |
| 8 | | 03.0451 | 复合套 | Composite Set | 4 | | |
| 9 | | 03.0303 | 圆柱销Φ5×35 | Cylindrical Pin | 10 | | |
| 10 | | 30.28.0093 | 推杆安装轴 | Push Rod Shaft | 2 | | |
| 11 | | 30.28.0082 | 轮架 | Wheel Bracket | 2 | | |
| 12 | | 30.01.2845 | 退出滚子 | Drop Out Roller | 2 | | Option |
| 13 | | 03.0453 | 带肩复合套 | Composite Set With Shoulder | 4 | | |
| 14 | | 30.28.0164 | 轮架安装轴 | Wheel Bracket Shaft | 2 | | |
| 15 | | 03.0305 | 圆柱销Φ5×30 | Cylindrical Pin | 2 | | |
| 16 | | 30.01.1290 | 连扳 | Connecting Plate | 4 | | |
| 17 | | 03.90.057 | 轴承 6204 | Bearing | 8 | | |
| 18 | | 02.LZ.0128 | 小轮 | Small Roller | 4 | | |

kupit-shtabeler.ru

## 1.2 连杆摇臂组件 Connecting Rod Rocker Assembly

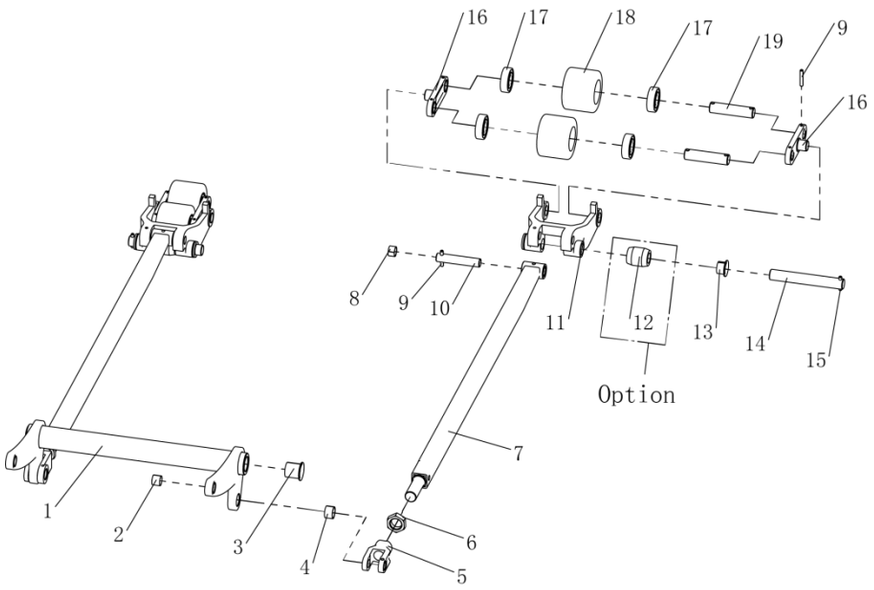


| 序号 Item | | 代码 Part No | 名称 Description | 数量 Qty | 适用日期 Applied Date | 备注 Remark |
|---|---|---|---|---|---|---|
| 18 | | 02.LZ.01261 | 小轮(低放) Small roller (low release) | 4 | | Option |
| 19 | | 30.28.0094 | 承载轮销轴 Bearing wheel pin shaft | 4 | | |

## 2.驱动系统 Driving System
## 2.103 驱动系统（电动）Driving System（Full Electric）

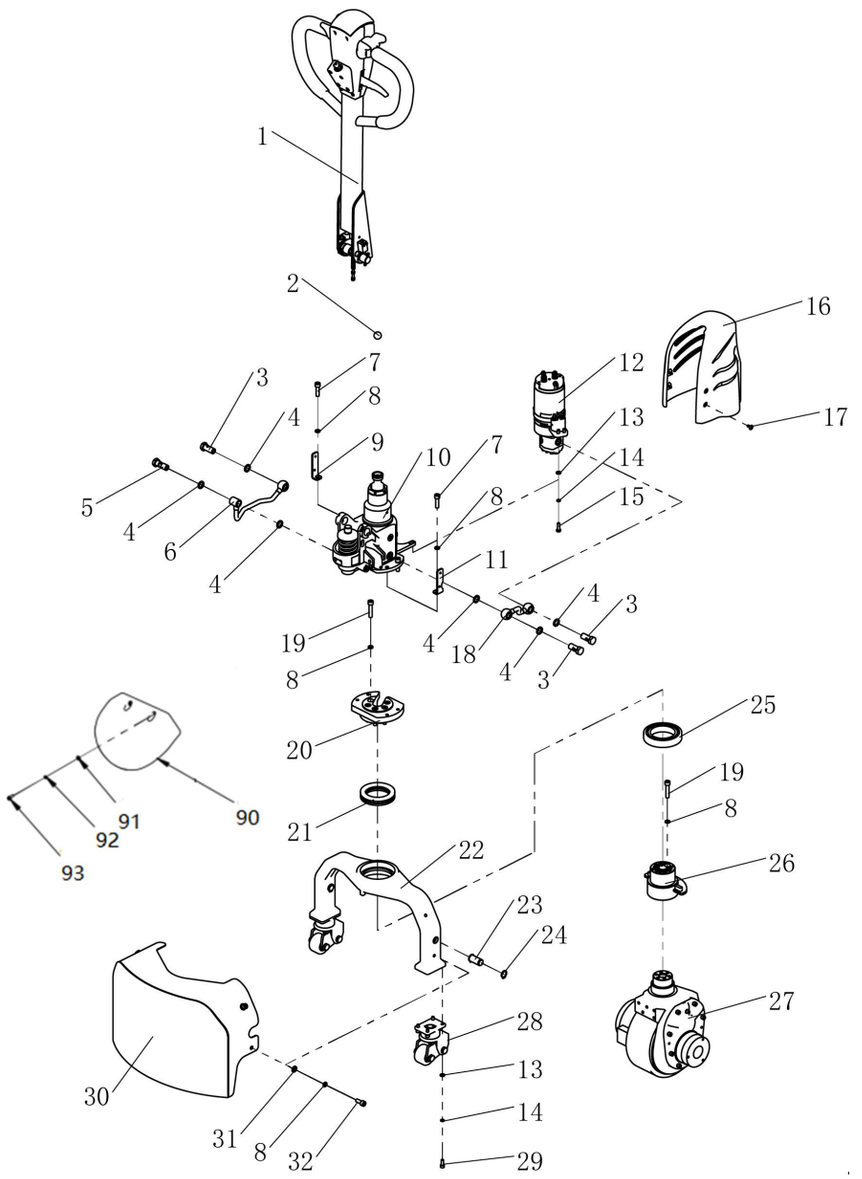


| 序号 Item | | 代码 Part No | 名称 Description | | 数量 Qty | 适用日期 Applied Date | 备注 Remark |
|---|---|---|---|---|---|---|---|
| 1 | | 82.45.0016 | 手柄组件 | Handle Components | 1 | | |
| 2 | | 03.07391 | 钢球 | Steel Ball | 1 | | |
| 3 | | 02.01.30810 | 空心螺栓 | Hollow Bolt | 6 | | |
| 4 | | 03.0482 | 密封垫Φ14 | Gasket Seal | 3 | | |
| 5 | | 02.YYL.2383 | 空心螺栓 | Hollow Bolt | 1 | | |
| 6 | 01 | 02.YYL.2330 | 起升油管 | Lifting Tubing | 1 | -200703 | |
| 6 | 02 | 02.YYL.3868 | 起升油管 | Lifting Tubing | 1 | 200703- | |
| 7 | | 03.0157 | 螺钉 M8×30 | Screw | 4 | 200820- | |
| 8 | | 03.0012 | 弹垫Φ8 | Spring Washer | 19 | 200820- | |
| 9 | | 30.20.0004 | 安装板左 | Mounting Plate Left | 1 | 200820- | |
| 10 | | 02.YG.3716 | 电动油缸 | Electric Cylinder | 1 | | |
| 11 | | 30.20.0005 | 安装板右 | Mounting Plate Right | 1 | 200820- | |
| 12 | | 81.024.0001 | 动力单元 | Power Unit | 1 | | |
| 13 | | 03.0049 | 平垫Φ6 | Flat Washer | 10 | | |
| 14 | | 03.0011 | 弹垫Φ6 | Spring Washer | 10 | | |
| 15 | | 03.0410 | 螺栓 M6×20 | Bolt | 2 | | |
| 16 | 01 | 02.FGJ.02201 | 电机罩 | Motor Cover | 1 | -200820 | |
| 16 | 02 | 02.FGJ.3447 | 电机罩红 | Motor Cover Red | 1 | 200820- | |
| 16 | 02 | 02.FGJ.34471 | 电机罩绿 | Motor Cover Green | 1 | 200820- | |
| 16 | 02 | 02.FGJ.34472 | 电机罩黄 | Motor Cover Yellow | 1 | 200820- | |
| 17 | 01 | 03.02360 | 螺钉 M5×10 | Screw | 2 | -200820 | |
| 17 | 02 | 03.0226 | 螺钉 M5×12 | Screw | 4 | 200820- | |
| 18 | | 02.YYL.2331 | 进油管 | Inlet Pipe | 1 | | |
| 19 | | 03.0159 | 螺钉 M8×40 | Screw | 5 | | |
| 20 | | 30.01.6368 | 驱动夹紧板 | Drive Clamping Plate | 1 | | |

## 2.驱动系统 Driving System
## 2.103 驱动系统（电动）Driving System（Full Electric）

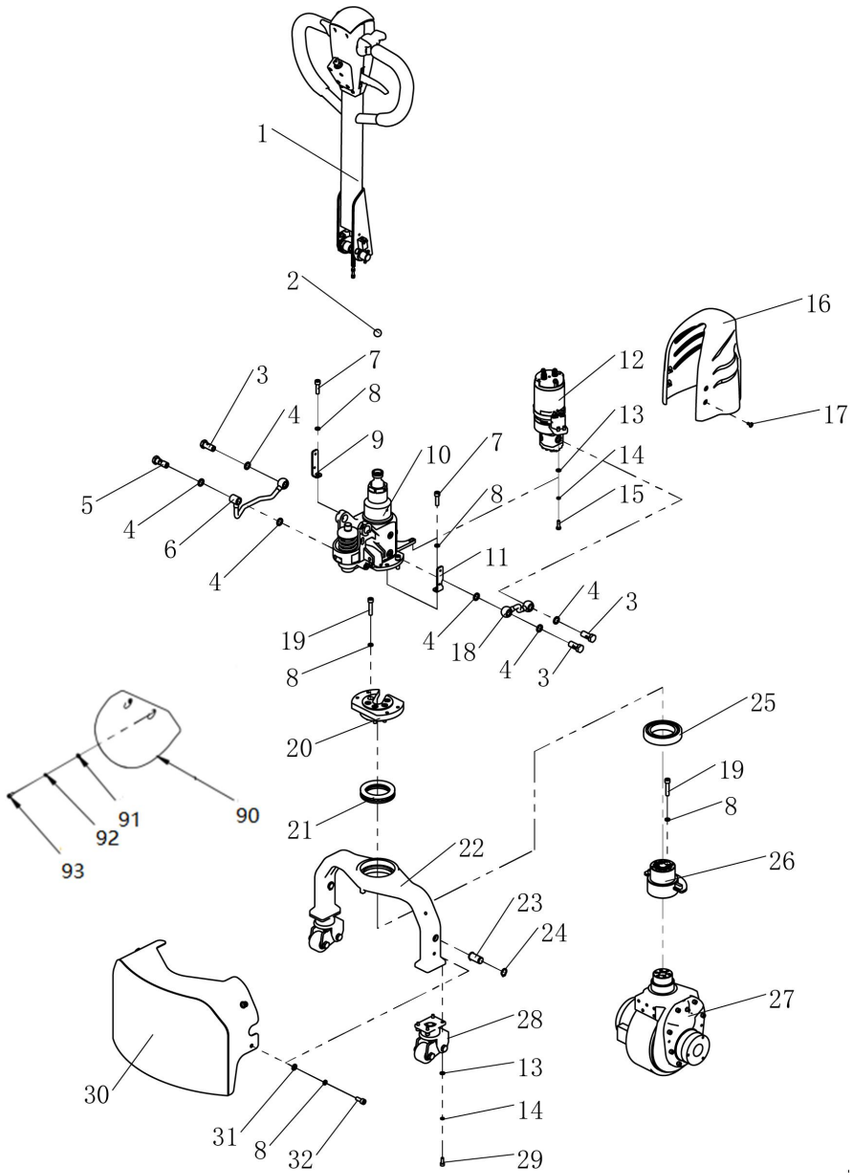


| 序号 Item | | 代码 Part No | 名称 Description | | 数量 Qty | 适用日期 Applied Date | 备注 Remark |
|---|---|---|---|---|---|---|---|
| 21 | | 03.90.0121 | 轴承 51113 | Bearing | 1 | | |
| 22 | 01 | 33.033.0003 | 底座支架 | Base Bracket | 1 | -200820 | |
| 22 | 02 | 40.14.011 | 轴承座支架 | Bearing Seat Bracket | 1 | 200820- | |
| 23 | | 40.14004 | 小轴 | Small Wheel | 2 | | |
| 24 | | 03.0063 | 轴用挡圈Φ17 | Circle For Shaft | 4 | | |
| 25 | | 03.90.091 | 轴承 6013 | Bearing | 1 | | |
| 26 | 01 | 33.030.0014 | 连接套 | Adapter Sleeve | 1 | -200820 | |
| 26 | 02 | 33.033.0001 | 连接套 | Adapter Sleeve | 1 | 200820- | |
| 27 | | 02.QD.0085 | 驱动总成 | Driving Assembly | 1 | | |
| 28 | 01 | 81.005.002 | 辅助轮组件 | Balance Wheel Assembly | 2 | -210125 | |
| 28 | 02 | 81.005.023 | 辅助轮组件 | Balance Wheel Assembly | 2 | 210125- | |
| 29 | | 03.0147 | 螺钉 M6×16 | Screw | 8 | | |
| 30 | | 30.44.071 | 下罩 | Motor Cover | 1 | 200820- | |
| 31 | | 03.0050 | 平垫Φ8 | Flat Washer | 4 | 200820- | |
| 32 | | 03.0154 | 螺钉 M8×20 | Screw | 4 | 200820- | |
| 90 | | 02.FGJ.0221 | 挡泥板 | Fender | 1 | -200820 | |
| 91 | | 03.00491 | 平垫Φ4 | Flat Washer | 2 | -200820 | |
| 92 | | 03.0008 | 弹垫Φ4 | Spring Washer | 2 | -200820 | |
| 93 | | 03.0123 | 螺栓 M4×10 | Bolt | 2 | -200820 | |

## 2.202 驱动系统（手动）Driving System（Hand Lowering）

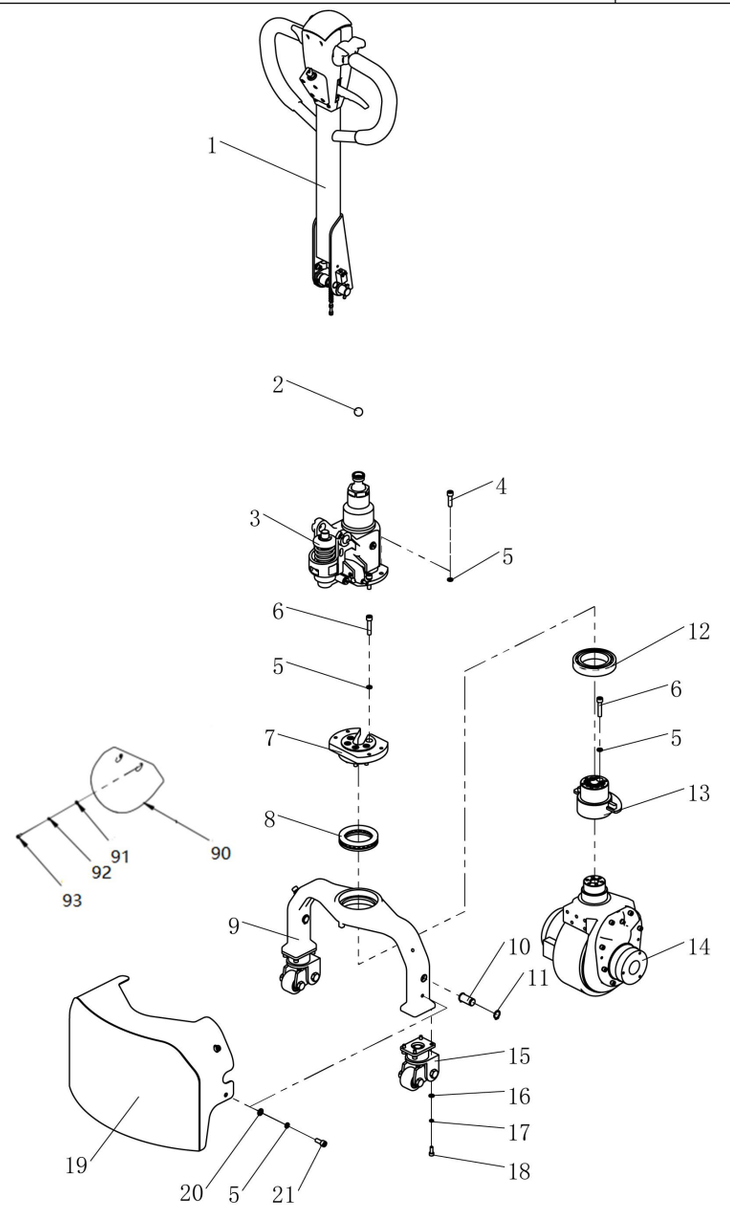


| 序号 Item | | 代码 Part No | 名称 Description | | 数量 Qty | 适用日期 Applied Date | 备注 Remark |
|---|---|---|---|---|---|---|---|
| 1 | | 82.45.0016 | 手柄组件 | Handle Components | 1 | | |
| 2 | | 03.07391 | 钢球 | Steel Ball | 1 | | |
| 3 | | 02.YG.3602 | 手动油缸 | Manual Oil Cylinder | 1 | | |
| 4 | | 03.0157 | 螺钉 M8×30 | Screw | 4 | | |
| 5 | | 03.0012 | 弹垫Φ8 | Spring Washer | 19 | | |
| 6 | | 03.0159 | 螺钉 M8×40 | Screw | 11 | | |
| 7 | | 30.01.6368 | 驱动夹紧板 | Drive Clamping | 1 | | |
| 8 | | 03.90.0121 | 轴承 51113 | Bearing | 1 | | |
| 9 | 01 | 33.033.0003 | 底座支架 | The Base Bracket | 1 | -200820 | |
| 9 | 02 | 40.14.011 | 轴承座支架 | Bearing Seat Bracket | 1 | 200820- | |
| 10 | | 40.14004 | 小轴 | Small Shaft | 2 | | |
| 11 | | 03.0063 | 轴用挡圈Φ17 | Circlip For Shaft | 4 | | |
| 12 | | 03.90.091 | 轴承 6013 | Bearing | 1 | | |
| 13 | 01 | 33.030.0014 | 连接套 | Adapter Sleeve | 1 | -200820 | |
| 13 | 02 | 33.033.0001 | 连接套 | Adapter Sleeve | 1 | 200820- | |
| 14 | | 02.QD.0085 | 驱动总成 | Driving Assembly | 1 | | |
| 15 | 01 | 81.005.002 | 辅助轮组件 | Balance Wheel Assembly | 2 | -210125 | |
| 15 | 02 | 81.005.023 | 辅助轮组件 | Balance Wheel Assembly | 2 | 210125- | |
| 16 | | 03.0049 | 平垫Φ6 | Spring Washer | 8 | | |
| 17 | | 03.0011 | 弹垫Φ6 | Flat Washer | 8 | | |
| 18 | | 03.0147 | 螺钉 M6×16 | Screw | 8 | | |
| 19 | | 30.44.071 | 下罩 | Motor Cover | 1 | 200820- | |
| 20 | | 03.0050 | 平垫Φ8 | Spring Washer | 4 | 200820- | |
| 21 | | 03.0154 | 螺钉 M8×20 | Screw | 4 | 200820- | |

## 2.202 驱动系统（手动）Driving System（Hand Lowering）

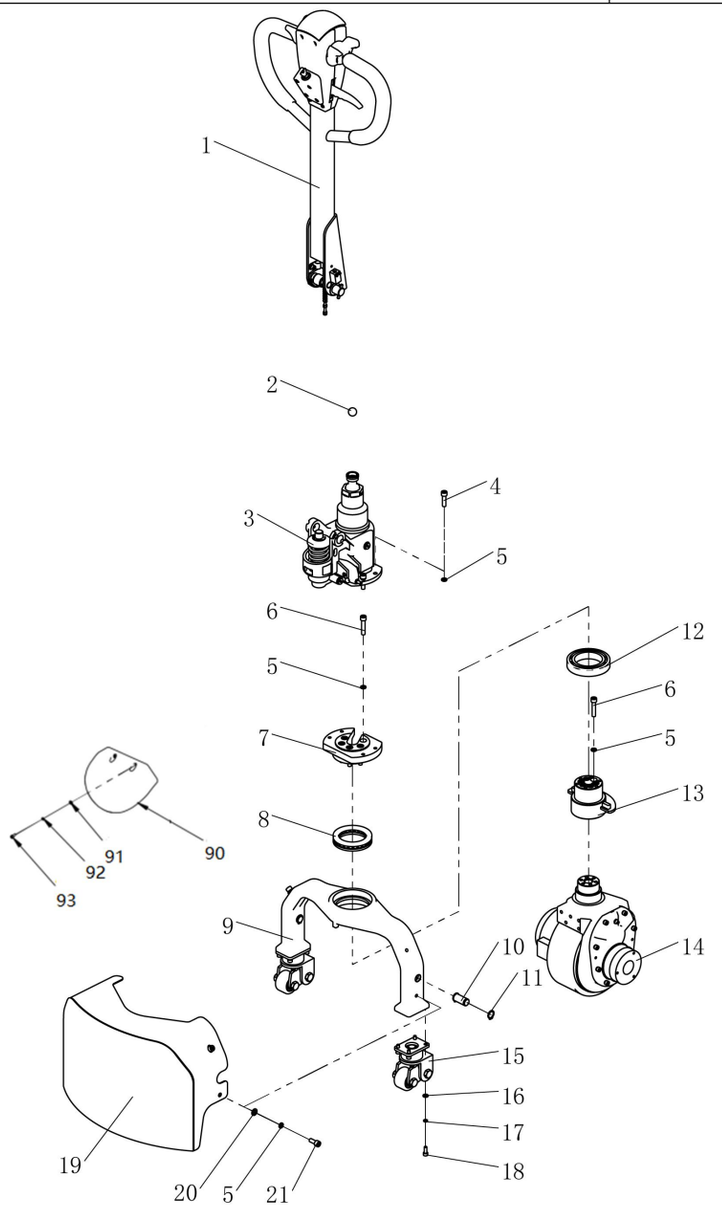


| 序号 Item | | 代码 Part No | 名称 Description | | 数量 Qty | 适用日期 Applied Date | 备注 Remark |
|---|---|---|---|---|---|---|---|
| 90 | | 02.FGJ.0221 | 挡泥板 | Fender | 1 | -200820 | |
| 91 | | 03.00491 | 平垫Φ4 | Spring Washer | 2 | -200820 | |
| 92 | | 03.0008 | 弹垫Φ4 | Flat Washer | 2 | -200820 | |
| 93 | | 03.0123 | 螺栓 M4×10 | Bolt | 2 | -200820 | |

## 2.3 驱动总成 Driving Assembly

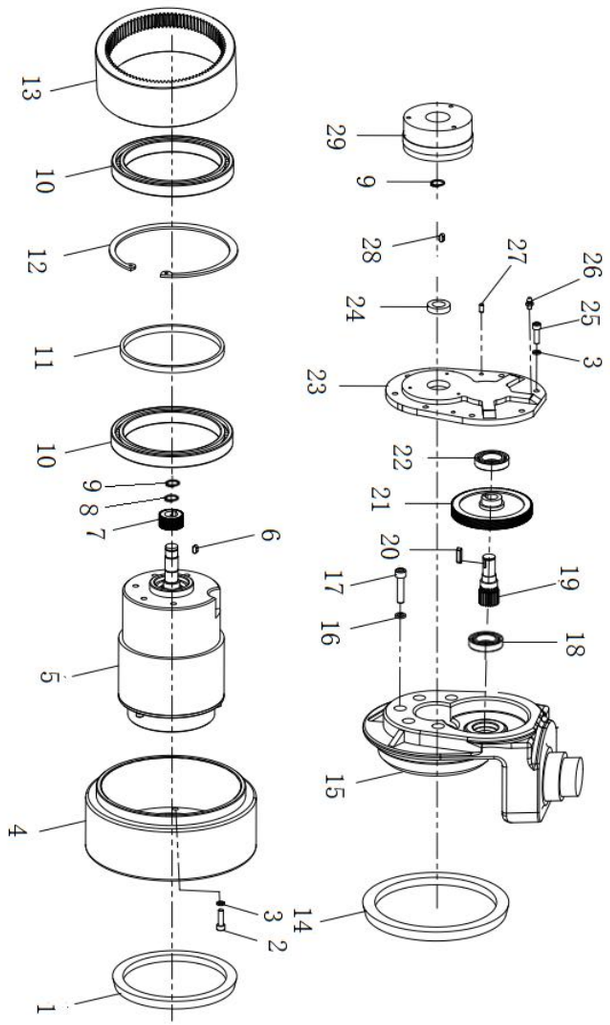


| 序号 Item | | 代码 Part No | 名称 Description | | 数量 Qty | 适用日期 Applied Date | 备注 Remark |
|---|---|---|---|---|---|---|---|
| 1 | | 02.01.3703 | 油封 | Oil Seal | 1 | | |
| 2 | | 03.0147 | 螺钉 M6×16 | Screw | 8 | | |
| 3 | | 03.0011 | 弹垫Φ6 | Spring Washer | 16 | | |
| 4 | | 02.QDL.0272 | 驱动轮 | Driving Wheel | 1 | | |
| 5 | | 02.DJ.00852 | 电机 | Motor | 1 | | |
| 6 | | 03.0716 | 平键销 | Flat Key Pin | 1 | | |
| 7 | | 02.01.00702 | 主动斜齿轮 | Driving Helical Gear | 1 | | |
| 8 | | 03.0062 | 轴用挡圈Φ16 | Circlip For Shaft | 1 | | |
| 9 | | 03.0061 | 轴用挡圈Φ15 | Circlip For Shaft | 2 | | |
| 10 | | 02.01.006810 | 轴承 61824 | Bearing | 2 | | |
| 11 | | 02.01.9294 | 隔套 | Spacer | 1 | | |
| 12 | | 03.0709 | 孔用挡圈Φ150 | Circlip For Hole | 1 | | |
| 13 | | 02.01.00687 | 内齿轮 | Internal Gear | 1 | | |
| 14 | | 02.01.3681 | 大油封 | Big Oil Seal | 1 | | |
| 15 | | 02.01.9267 | 齿轮箱 | Gearbox | 1 | | |
| 16 | | 03.0012 | 弹垫Φ8 | Spring Washer | 5 | | |
| 17 | | 03.0157 | 螺钉 M8×30 | Screw | 5 | | |
| 18 | | 03.90.074 | 轴承 16003 | Bearing | 1 | | |
| 19 | | 02.01.00701 | 传动齿轮 | Transmission Gear | 1 | | |
| 20 | | 03.0717 | 平键销 | Flat Key Pin | 1 | | |
| 21 | | 02.01.00703 | 被动斜齿轮 | Passive Helical Gear | 1 | | |
| 22 | | 03.90.075 | 轴承 61905 | Bearing | 1 | | |
| 23 | | 02.01.210707 | 箱盖 | Gearbox Cover | 1 | | |
| 24 | | 03.0719 | 油封 | Oil Seal | 1 | | |
| 25 | | 03.0149 | 螺钉 M6×20 | Screw | 8 | | |
| 26 | | 03.0506 | 黄油嘴 | Grease Fitting | 1 | | |

## 2.3 驱动总成 Driving Assembly

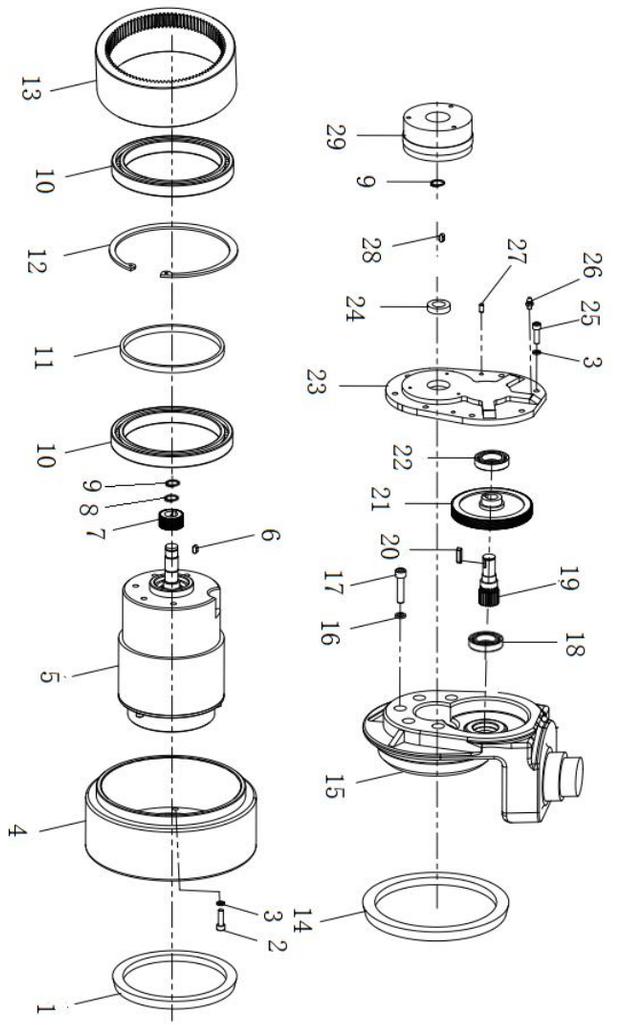


| 序号 Item | | 代码 Part No | 名称 Description | | 数量 Qty | 适用日期 Applied Date | 备注 Remark |
|---|---|---|---|---|---|---|---|
| 27 | | 03.04350 | 圆柱销Φ5×20 | Cylindrical Pin | 2 | | |
| 28 | | 03.0975 | 平键销 | Flat Key Pin | 1 | | |
| 29 | | 02.01.3596 | 刹车总成 | Brake Assembly | 1 | | |

kupit-shtabeler.ru

## 2.401 辅助轮组件 Balance Wheel Assembly

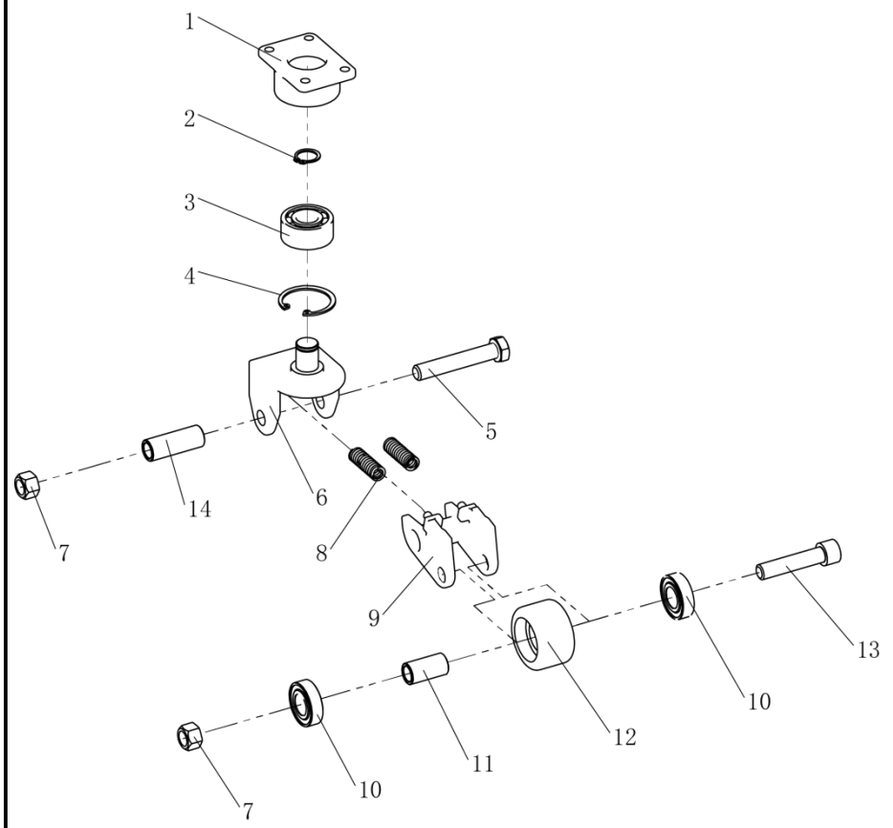


| 序号 Item | | 代码 Part No | 名称 Description | | 数量 Qty | 适用日期 Applied Date | 备注 Remark |
|---|---|---|---|---|---|---|---|
| 1 | | 30.28.0190 | 法兰 | Flange | 1 | | |
| 2 | | 03.0063 | 轴用挡圈Φ17 | Circlip For Shaft | 1 | | |
| 3 | | 03.90.0011 | 轴承 3203 | Bearing | 1 | | |
| 4 | | 03.0027 | 孔用挡圈Φ40 | Circlip For Hole | 1 | | |
| 5 | | 03.0372 | 螺栓 M12×70 | Bolt | 1 | | |
| 6 | | 30.28.0189 | 支架 | Bracket | 1 | | |
| 7 | | 03.0245 | 螺母 M12 | Nut | 2 | | |
| 8 | | 03.04790 | 弹簧 | Spring | 2 | | |
| 9 | 01 | 30.01.6685 | 轮架 | Wheel Frame | 1 | -210125 | |
| 9 | 02 | 40.11.048 | 轮架 | Wheel Frame | 1 | 210125- | |
| 10 | | 03.90.042 | 轴承 6003 | Bearing | 2 | | |
| 11 | | 30.01.6614 | 轴套 | Shaft Sleeve | 1 | | |
| 12 | | 02.01.3368 | 辅助轮 | Balance Wheel | 1 | | |
| 13 | | 03.01731 | 螺钉 M12×55 | Screw | 1 | | |
| 14 | | 40.11.082 | 轮架套 | Wheel Frame Bushing | 1 | 210125- | |

kupit-shtabeler.ru

## 3.操作系统 Operating System

### 3.1 手柄组件 Handle Components

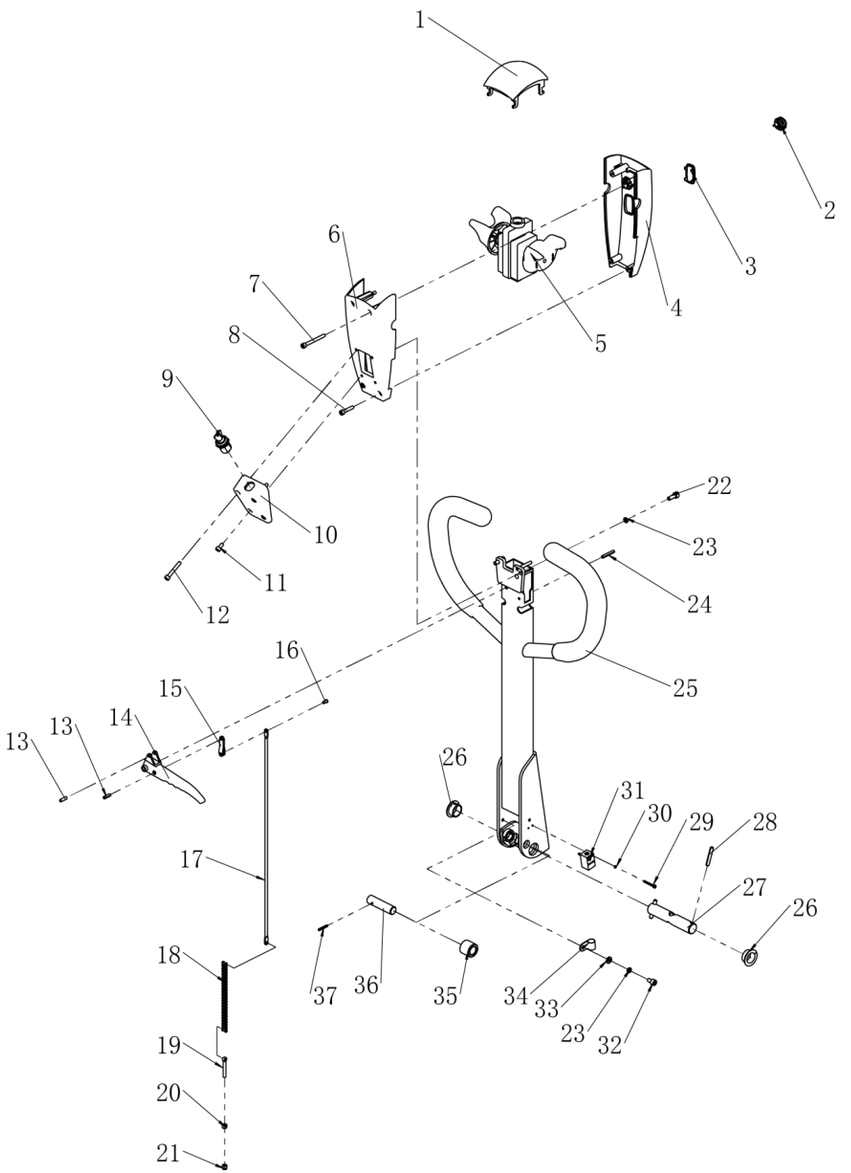


| 序号 Item | | 代码 Part No | 名称 Description | | 数量 Qty | 适用日期 Applied Date | 备注 Remark |
|---|---|---|---|---|---|---|---|
| 1 | | 16.0038 | 肚皮开关 | Belly Switch | 1 | | |
| 2 | | 16.0246 | 按钮开关 | Button Switch | 2 | | |
| 3 | | 02.DLB.317703 | 电量表 | Electricity Meter | 1 | | |
| 4 | | 02.FGJ.32834 | 上罩 | Handle upper Cover | 1 | | |
| 5 | | 02.01.9048 | 加速器 | Accelerator | 1 | | |
| 6 | | 02.FGJ.32835 | 下罩 | Handle Lower Cover | 1 | | |
| 7 | | 03.03644 | 螺钉 M5×50 | Screw | 2 | | |
| 8 | | 03.01410 | 螺钉 M5×25 | Screw | 2 | | |
| 9 | | 02.01.2193 | 钥匙开关 | Key Switch | 1 | | |
| 10 | | 02.YYL.2391 | 手柄盒盖 | Handle Key Box | 1 | | |
| 11 | | 03.0139 | 螺钉 M5×10 | Screw | 2 | | |
| 12 | | 03.01340 | 螺钉 M5×35 | Screw | 2 | | |
| 13 | | 03.0312 | 圆柱销Φ4×16 | Cylindrical Pin | 2 | | |
| 14 | | 30.01.3270 | 拉手 | Knob | 1 | | |
| 15 | | 30.01.3268 | 连扳 | Connecting Board | 1 | | |
| 16 | | 03.0703 | 销轴Φ4×8 | Axis Pin | 1 | | |
| 17 | | 30.01.3292 | 拉杆 | Pull Rod | 1 | | |
| 18 | | 02.01.3161 | 链条 | Chain | 1 | | |
| 19 | | 30.01.3272 | 带孔螺栓 | Eye Bolt | 1 | | |
| 20 | | 03.0255 | 螺母 M5 | Nut | 1 | | |
| 21 | | 03.02441 | 螺母 M5 | Nut | 1 | | |
| 22 | | 03.0147 | 螺钉 M6×16 | Screw | 2 | | |
| 23 | | 03.0011 | 弹垫Φ6 | Spring Washer | 3 | | |
| 24 | | 03.03101 | 圆柱销Φ4×30 | Cylindrical Pin | 1 | | |
| 25 | | 81.020.0003 | 手柄 | Handle Bar | 1 | | |
| 26 | | 03.0692 | 带肩复合套 | Composite Set With Shoulder | 2 | | |
| 27 | | 30.02.046 | 转动轴 | Rotation Shaft | 1 | | |

kupit-shtabeler.ru

## 3.操作系统 Operating System

### 3.1 手柄组件 Handle Components

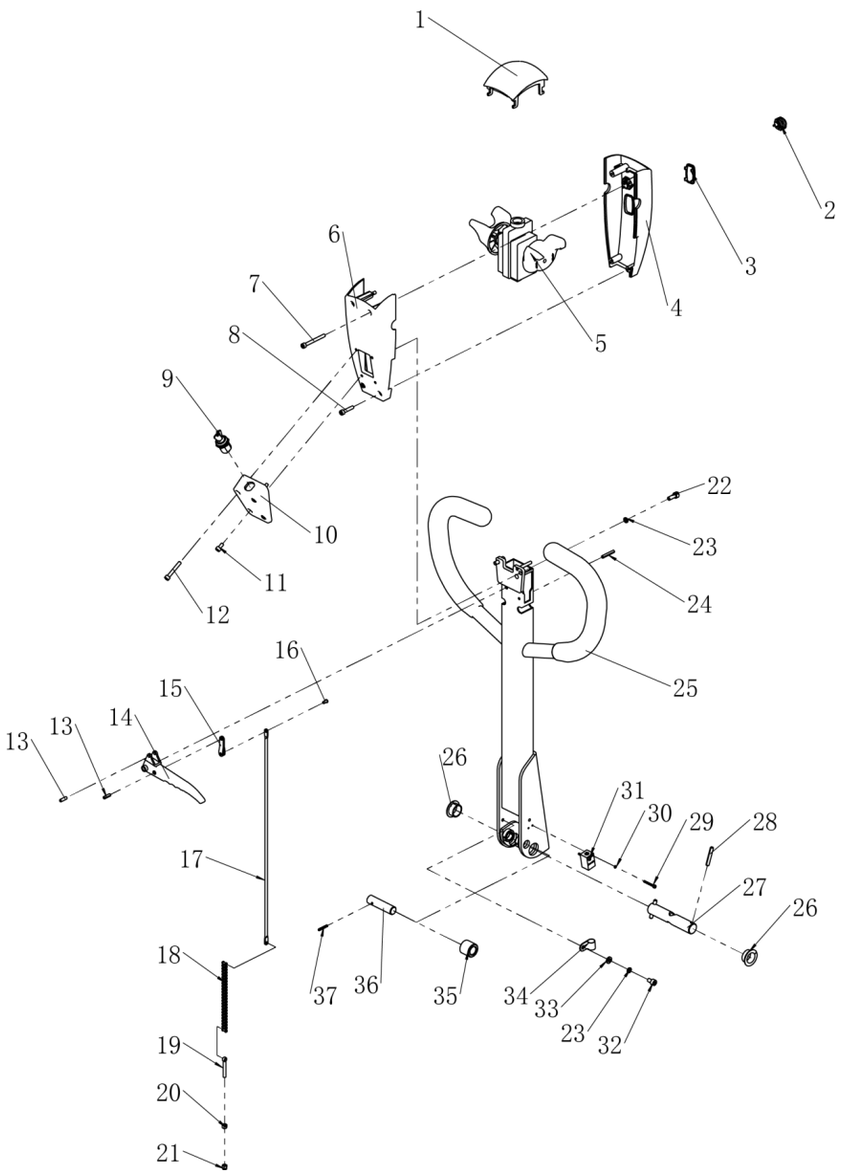


| 序号 Item | | 代码 Part No | 名称 Description | | 数量 Qty | 适用日期 Applied Date | 备注 Remark |
|---|---|---|---|---|---|---|---|
| 28 | | 03.0303 | 圆柱销Φ5×35 | Cylindrical Pin | 2 | | |
| 29 | | 03.01301 | 螺钉 M3×25 | Screw | 2 | | |
| 30 | | 03.00091 | 弹垫Φ3 | Spring Washer | 2 | | |
| 31 | | 02.01.9274 | 接近开关 | Proximity Switch | 1 | | |
| 32 | | 03.0175 | 螺钉 M6×10 | Screw | 1 | | |
| 33 | | 03.0049 | 平垫Φ6 | Flat Washer | 1 | | |
| 34 | | 03.0601 | 卡箍 | Clamp | 1 | | |
| 35 | | 30.01.3293 | 下压滚子 | Pressing Roller | 1 | | |
| 36 | | 30.02.047 | 压轴 | Shaft | 1 | | |
| 37 | | 03.0702 | 圆柱销Φ3×22 | Cylindrical Pin | 1 | | |

kupit-shtabeler.ru

## 4.液压系统 Hydraulic System
## 4.1 电动油缸 Electric Cylinder

不单独提供

Not Provided Separately

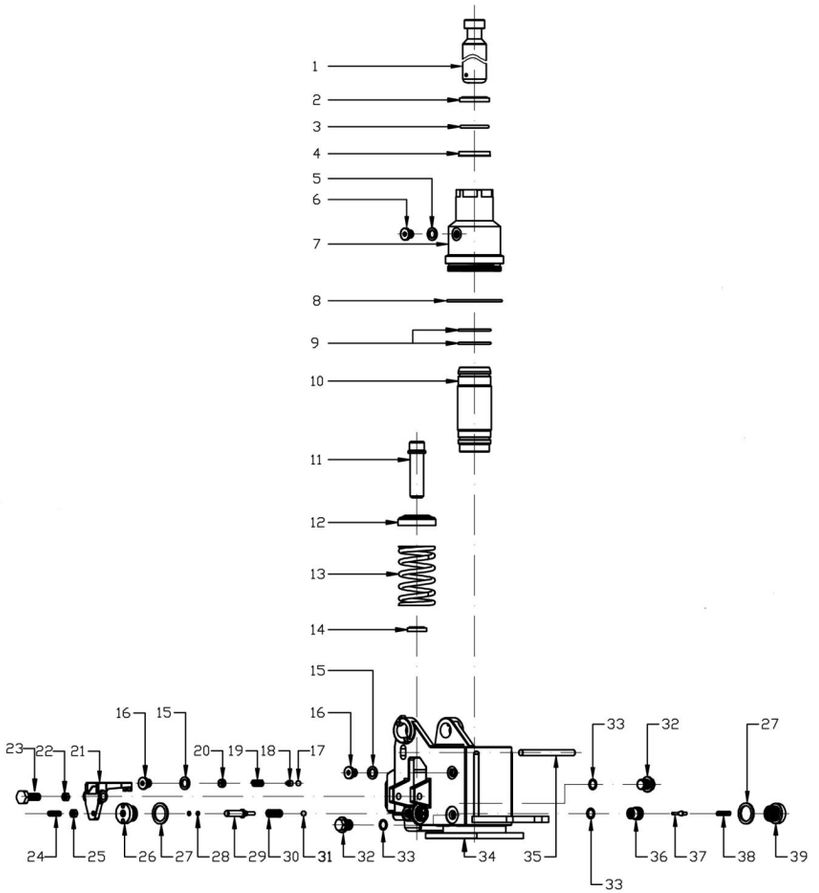


| 序号 Item | | 代码 Part No | 名称 Description | | 数量 Qty | 适用日期 Applied Date | 备注 Remark |
|---|---|---|---|---|---|---|---|
| 1 | | ME2T-685-35-0001 | 活塞杆 | Plunger Lever | 1 | | |
| 2 | | DHS35 | 防尘圈 | Dust Ring | 1 | | |
| 3 | | GB/T3452.1-1992 | 0 型圈 | O-Ring | 1 | | |
| 4 | | UHS35 | 密封圈 | Seal Ring | 1 | | |
| 5 | | MA2T-685-0050 | 密封垫Φ10 | Gasket | 3 | | |
| 6 | | MA2T-685-0060 | 螺塞 | Plug Screw | 3 | | |
| 7 | | ME2T-685-35-0002 | 外缸 | Outer Cylinder | 1 | | |
| 8 | | GB/T3452.1-1992 | 0 型圈 | O-Ring | 1 | | |
| 9 | | GB/T3452.1-1992 | 0 型圈 | O-Ring | 2 | | |
| 10 | | MA2T-685-35-0003 | 内缸 | Inner Cylinder | 1 | | |
| 11 | | ME2T-685-0020 | 泵芯 | Pump Core | 1 | | |
| 12 | | MA2T-685-0100 | 压盖 | Gland | 1 | | |
| 13 | | ME2T-685-0030 | 弹簧 | Spring | 1 | | |
| 14 | | MA2T-685-0120 | 防尘圈 | Dust Ring | 1 | | |
| 15 | | MA2T-685-0050 | 密封垫Φ10 | Gasket | 3 | | |
| 16 | | MA2T-685-0060 | 螺塞 | Plug Screw | 3 | | |
| 17 | | MA2T-685-0180 | 钢球 | Steel Ball | 1 | | |
| 18 | | C-8 | 安全阀座 | Safety Seat | 1 | | |
| 19 | | C-17 | 安全阀弹簧 | Relief Valve Spring | 1 | | |
| 20 | | C-9 | 安全阀调节螺钉 | adjusting Screw | 1 | | |
| 21 | | ME2T-685-0040 | 开关板 | Switch Plate | 1 | | |
| 22 | | | 螺母 | Nut | 1 | | |
| 23 | | | 螺钉 | Screw | 1 | | |
| 24 | | GB/T73-1985 | 螺钉 | Screw | 1 | | |
| 25 | | GB/T41-2000 | 螺母 | Nut | 1 | | |
| 26 | | C-11 | 铜螺母 | Cooper Nut | 1 | | |
| 27 | | CDB-MA2T-685-0240 | 密封垫Φ20 | Gasket | 2 | | |
| 28 | | GB/T3452.1-1992 | 0 型圈 | O-Ring | 2 | | |

kupit-shtabeler.ru

## 4.液压系统 Hydraulic System
## 4.1 电动油缸 Electric Cylinder

不单独提供

Not Provided Separately

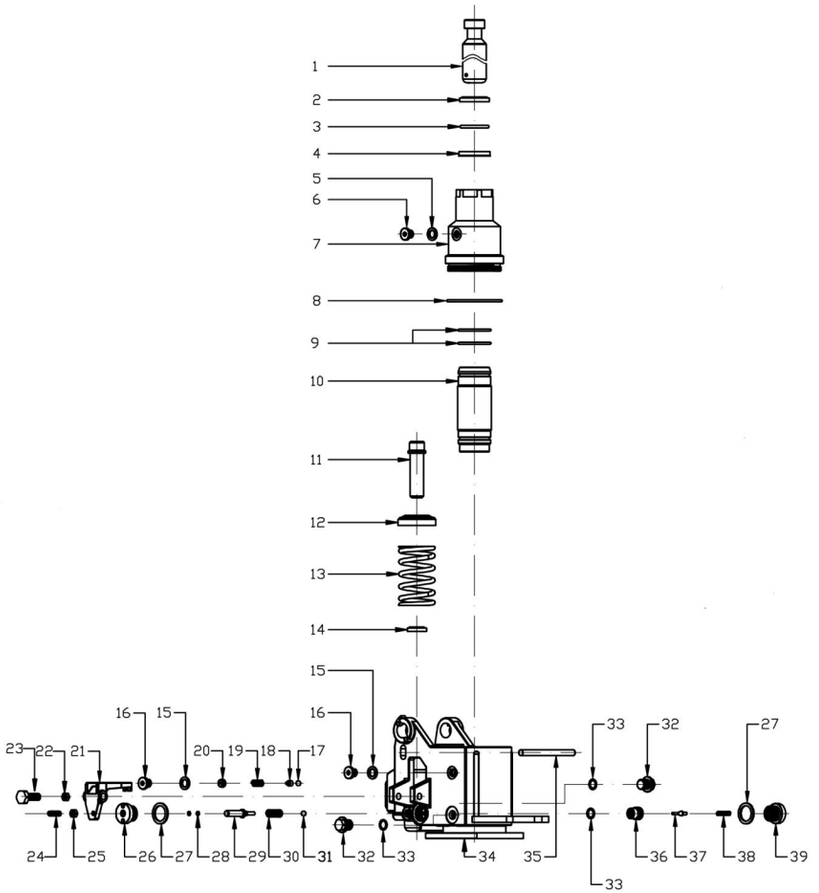


| 序号 Item | | 代码 Part No | 名称 Description | | 数量 Qty | 适用日期 Applied Date | 备注 Remark |
|---|---|---|---|---|---|---|---|
| 29 | | ME2T-685-0050 | 顶杆 | Mandrel | 1 | | |
| 30 | | C-15 | 顶杆弹簧 | Ejector Spring | 1 | | |
| 31 | | MA2T-685-0270 | 钢球 | Steel Ball | 1 | | |
| 32 | | | 堵头 | Plug | 2 | | |
| 33 | | GB/T3452.1-1992 | O 型圈 | O-Ring | 2 | | |
| 34 | | ME2T-685-35-0060 | 油泵焊接 | Oil Pump Welding | 1 | | |
| 35 | | MA2T-685-35-0170 | 定位杆 | Positioning Rod | 1 | | |
| 36 | | H-3290 | 阀体 | Valve Body | 1 | | |
| 37 | | H-3310 | 阀芯 | Spool | 1 | | |
| 38 | | H-3320 | 阀芯弹簧 | Spool Spring | 1 | | |
| 39 | | C-7 | 螺塞 | Plug Screw | 1 | | |

## 4.2 手动油缸 Hand Cylinder

不单独提供

Not Provided Separately

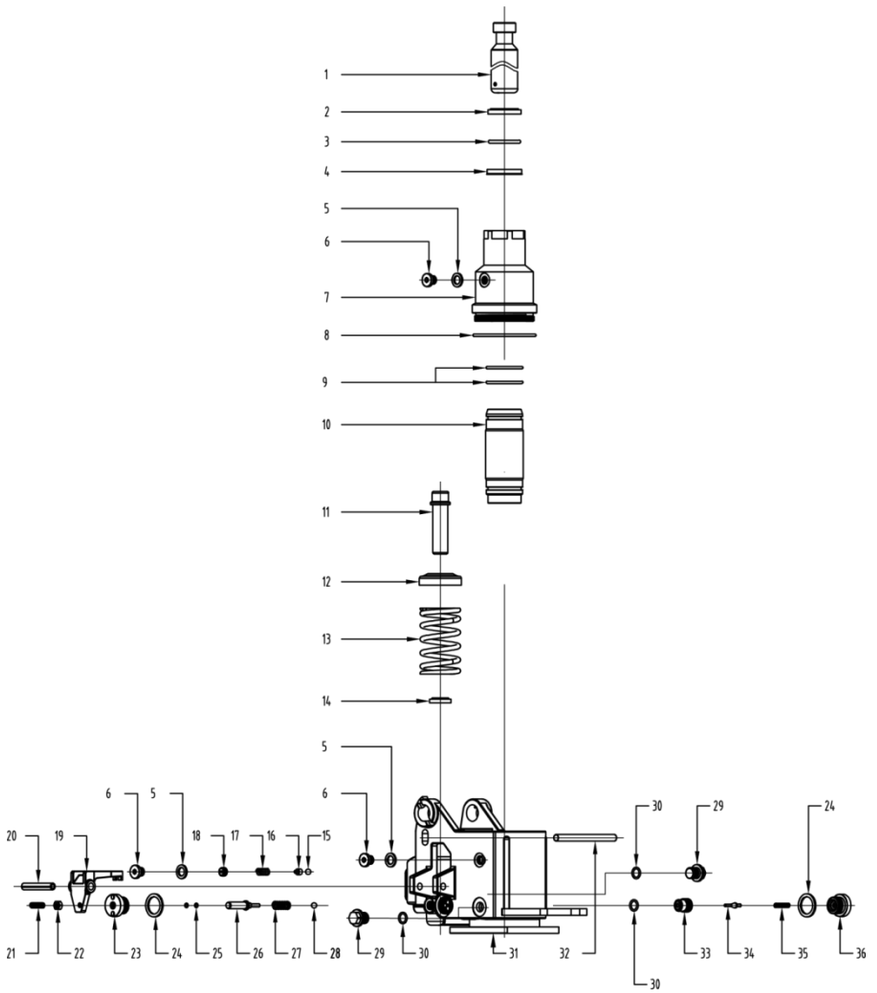

| 序号 Item | | 代码 Part No | 名称 Description | | 数量 Qty | 适用日期 Applied Date | 备注 Remark |
|---|---|---|---|---|---|---|---|
| 1 | | ME2T-685-35-0001 | 柱塞杆 | Plunger Lever | 1 | | |
| 2 | | DHS32 | 防尘圈 | Dust Ring | 1 | | |
| 3 | | GB/T3452.1-1992 | O 型圈 | O-Ring | 1 | | |
| 4 | | UHS32 | 密封圈 | Seal Ring | 1 | | |
| 5 | | MA2T-685-0050 | 密封垫Φ10 | Gasket | 3 | | |
| 6 | | C-10 | 螺塞 | Plug Screw | 3 | | |
| 7 | | ME2T-685-35-0002 | 外缸 | Outer Cylinder | 1 | | |
| 8 | | GB/T3452.1-1992 | O 型圈 | O-Ring | 1 | | |
| 9 | | GB/T3452.1-1992 | O 型圈 | O-Ring | 2 | | |
| 10 | | MA2T-685-35-0003 | 内缸 | Inner Cylinder | 1 | | |
| 11 | | ME2T-685-0020 | 泵芯 | Pump Core | 1 | | |
| 12 | | C-13 | 弹簧盖 | Gland | 1 | | |
| 13 | | ME2T-685-0030 | 弹簧 | Spring | 1 | | |
| 14 | | DHS18 | 防尘圈 | Dust Ring | 1 | | |
| 15 | | MA2T-685-0180 | 钢球 | Steel Ball | 1 | | |
| 16 | | C-8 | 安全阀座 | Safety Seat | 1 | | |
| 17 | | C-17 | 安全阀弹簧 | Relief Valve Spring | 1 | | |
| 18 | | C-9 | 安全阀调节螺钉 | Safety valve adjusting screw | 1 | | |
| 19 | | ME2T-685-0040 | 开关板 | Switch Plate | 1 | | |
| 20 | | | 圆柱销Φ8×50 | Round Pin | 1 | | |
| 21 | | GB/T73-1985 | 螺钉 M6×25 | Screw | 1 | | |
| 22 | | GB/T41-2000 | 螺母 M6 | Nut | 1 | | |
| 23 | | C-11 | 铜螺母 | Cooper Nut | 1 | | |
| 24 | | CDB-MA2T-685-0240 | 密封垫Φ20 | Gasket | 2 | | |
| 25 | | GB/T3452.1-1992 | O 型圈 | O-Ring | 2 | | |
| 26 | | ME2T-685-0040 | 顶杆 | Mandrel | 1 | | |
| 27 | | C-15 | 顶杆弹簧 | Ejector Spring | 1 | | |

kupit-shtabeler.ru

## 4.2 手动油缸 Hand Cylinder

不单独提供

Not Provided Separately

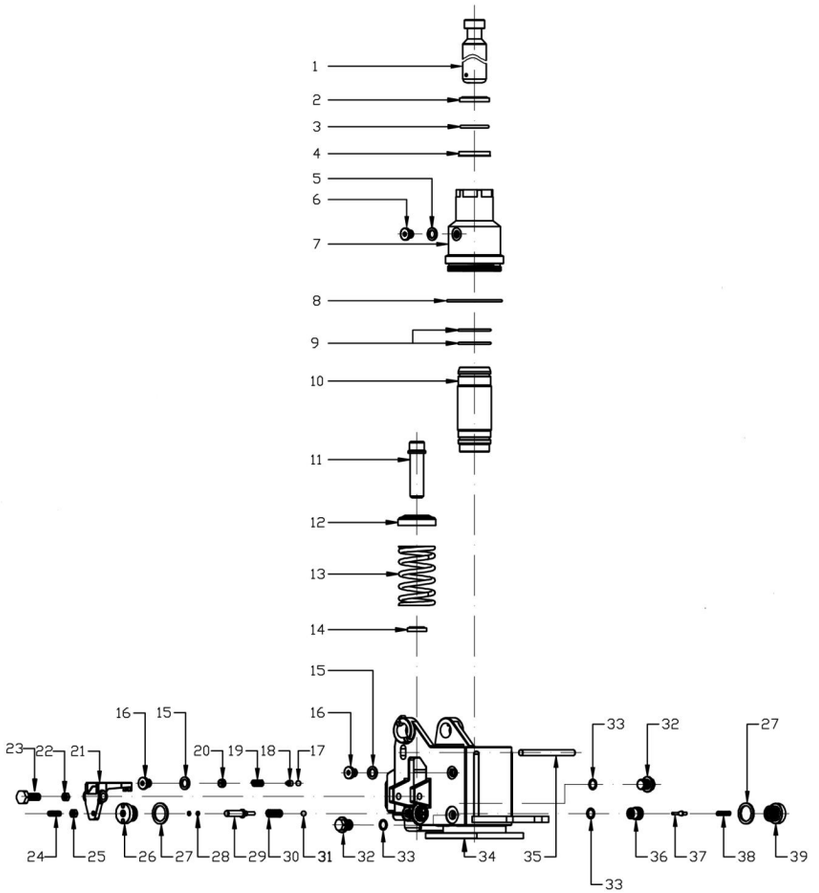


| 序号 Item | | 代码 Part No | 名称 Description | | 数量 Qty | 适用日期 Applied Date | 备注 Remark |
|---|---|---|---|---|---|---|---|
| 28 | | MA2T-685-0270 | 钢球 | Steel Ball | 1 | | |
| 29 | | | 堵头 | Plug | 2 | | |
| 30 | | GB/T3452.1-1992 | O 型圈 | O-Ring | 2 | | |
| 31 | | ME2T-685-35-0060 | 油泵焊接 | Oil Pump Welding | 1 | | |
| 32 | | MA2T-685-35-0170 | 定位杆 | Positioning Rod | 1 | | |
| 33 | | H-3290 | 阀体 | Valve Body | 1 | | |
| 34 | | H-3310 | 阀芯 | Spool | 1 | | |
| 35 | | H-3320 | 阀芯弹簧 | Spool Spring | 1 | | |
| 36 | | C-7 | 螺塞 | Plug Screw | 1 | | |

kupit-shtabeler.ru

## 5.电器系统 Electric System

### 5.101 电器总成 Electric Assembly

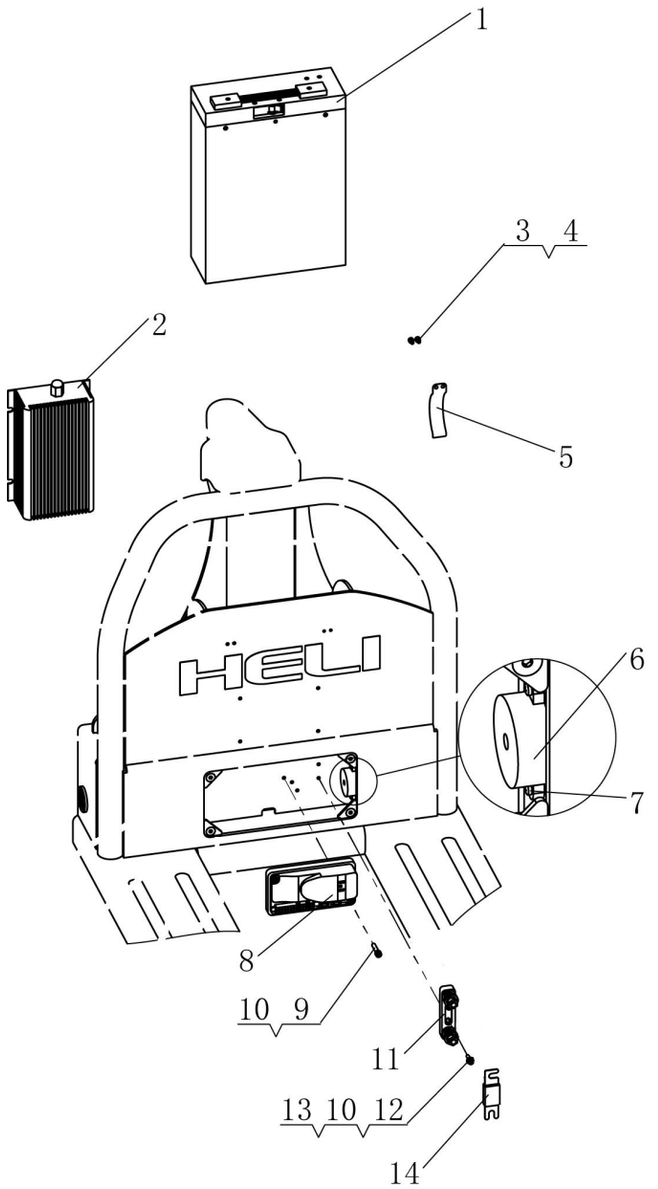


| 序号 Item | | 代码 Part No | 名称 Description | | 数量 Qty | 适用日期 Applied Date | 备注 Remark |
|---|---|---|---|---|---|---|---|
| 1 | | 02.XDC.3379 | 锂电池 20Ah | Lithium Battery | 1 | | |
| 1 | | 02.XDC.2330 | 锂电池 35Ah | Lithium Battery | 1 | | |
| 2 | | 02.CDQ.3376 | 亚标充电器 | Asia Charger | 1 | | |
| 2 | | 02.CDQ.3377 | 欧标充电器 | EU Charger | 1 | | |
| 2 | | 02.CDQ.3378 | 英标充电器 | U.K Charger | 1 | | |
| 2 | | 02.CDQ.3379 | 美标充电器 | U.S Charger | 1 | | |
| 3 | | 03.0127 | 螺钉 M4×6 | Screw | 4 | | |
| 4 | | 03.0008 | 弹垫Φ4 | Spring Washer | 4 | | |
| 5 | | 40.14.064 | 弹簧片 | Leaf Spring | 2 | | |
| 6 | | 19.03620 | 蜂鸣器 | Buzzer | 1 | | |
| 7 | | 03.02151 | 螺钉 M3×8 | Screw | 2 | | |
| 8 | 01 | 02.KZQ.2151 | 控制器 1212P | Controller | 1 | -210522 | |
| | 02 | 02.KZQ.2167 | 控制器 1212P | Controller | 1 | 210522- | |
| 8 | | 02.KZQ.2376 | 控制器 D2 | Controller | 1 | | |
| 9 | | 03.01410 | 螺钉 M5×25 | Screw | 2 | | |
| 10 | | 03.0007 | 弹垫Φ5 | Spring Washer | 4 | | |
| 11 | | 02.01.3057 | 熔断器座 | Fuse Base | 1 | | |
| 12 | | 03.0133 | 螺钉 M5×16 | Screw | 2 | | |
| 13 | | 03.0055 | 平垫Φ5 | Flat Washer | 2 | | |
| 14 | | 19.03450 | 保险丝 | fuse | 1 | | |

## 5.2 电缆总成 Cable Assembly

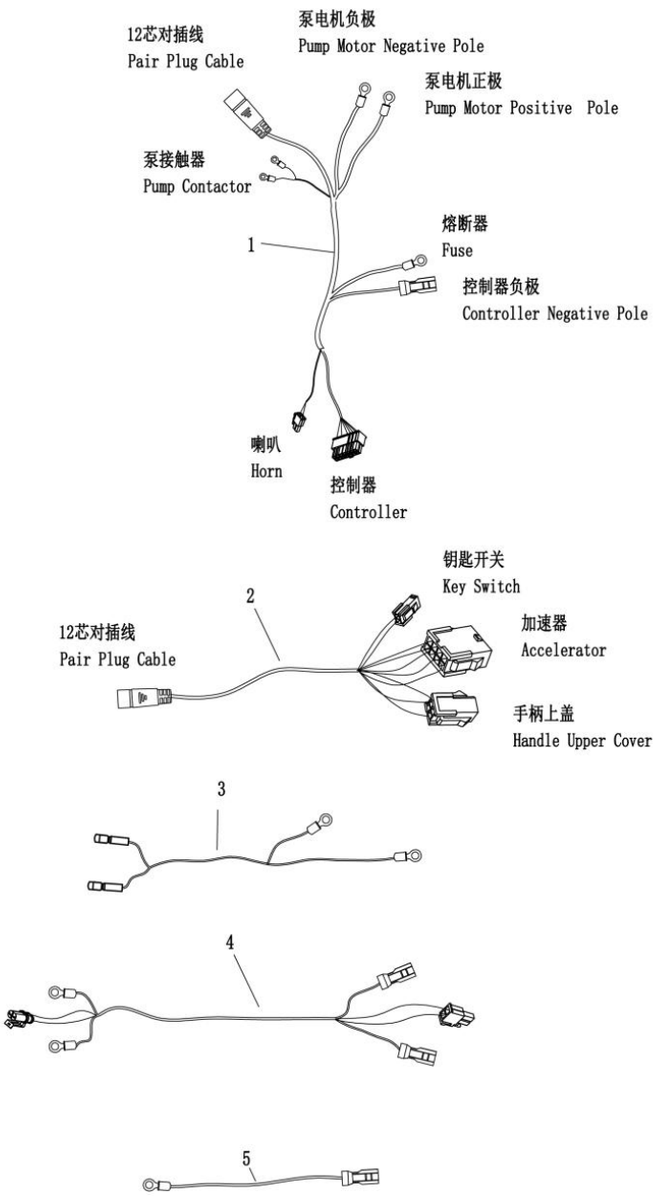


| 序号 Item | | 代码 Part No | 名称 Description | | 数量 Qty | 适用日期 Applied Date | 备注 Remark |
|---|---|---|---|---|---|---|---|
| 1 | | 02.XSXC.PJ.0009 | 车体线束 | Frame Wiring Harness | 1 | | |
| 2 | | 02.XSXC.PJ.0010 | 手柄线束 | Handle Wiring Harness | 1 | | |
| 3 | | 02.XSXC.PJ.2004 | 车体电源线 | Frame Power Wire | 1 | | |
| 4 | | 02.XSXC.PJ.2005 | 电机线 | Motor Wire | 1 | | |
| 5 | | 02.XSXC.PJ.4001 | 熔断器-控制器 | Fuse-Controller | 1 | | |

kupit-shtabeler.ru

本零件目录最终由制造商保留解释权