kupit-shtabeler.ru

HELI

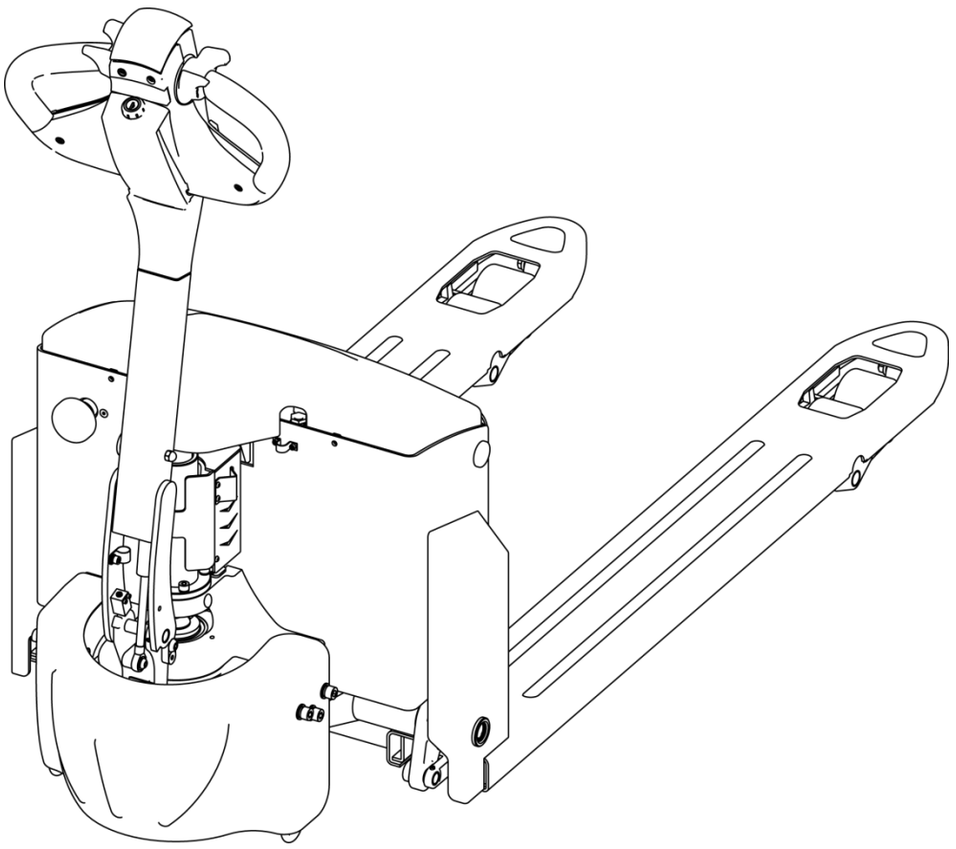

CBD15J
Electric Pallet Truck

Parts Manual

20210906 V03

kupit-shtabeler.ru

Content

1.Body System

1.1Frame System 1

1.2Connecting Rod Rocker Assembly 2

1.3Cover Assembly 3

2.Driving System

2.1Driving System 4

2.2Driving Assembly 5

3.Operating System

3.1Handle Components 7

3.2Handle Assembly 8

3.3Handle Components（Intelligent） 10

3.4Electronic Handle 11

4.Hydraulic System

4.1Hydraulic Assembly 12

4.2Cylinder Assembly 13

kupit-shtabeler.ru

5.Electric System

5.1 01Electric Assembly 14

5.2Cable Assembly 16

5.3Cable Assembly（Intelligent） 17

kupit-shtabeler.ru

1.Body System
1.101Frame System

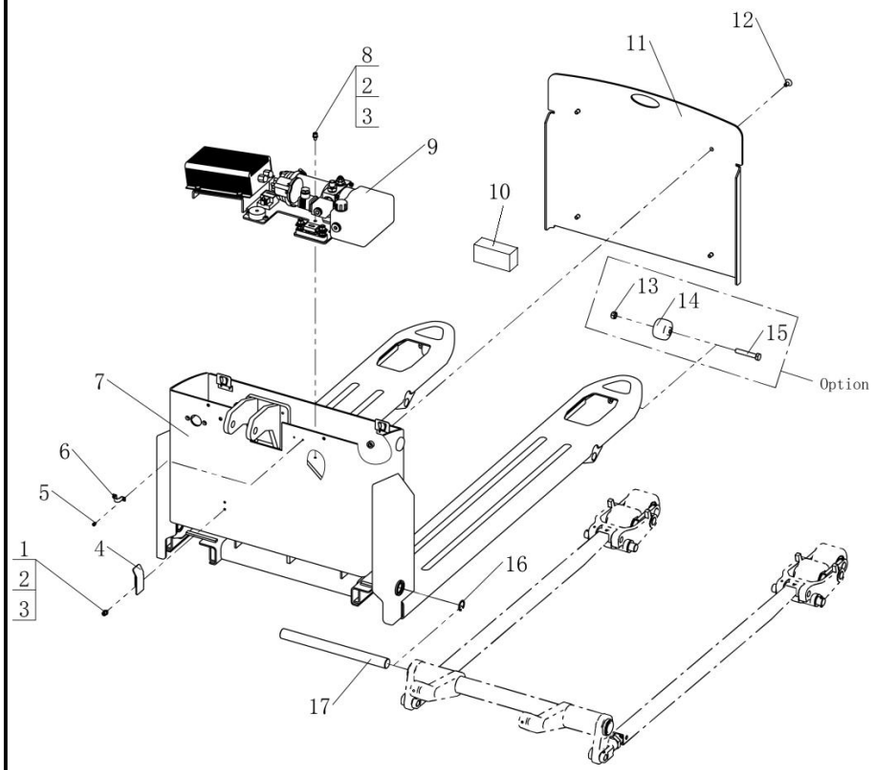

Item		Part No	Description	Qty	Applied Date	Remark
1		03.0175	Screw	2		
2		03.0011	Spring Washer	6		
3		03.0049	Flat Washer	6		
4		40.13.005	Plate	1		
5		03.0127	Screw	2		
6		03.0602	Clamp	1		
7		33.028.0011	Frame (560)	1		
7		33.028.0012	Frame (685)	1		
8		03.0145	Screw	4		
9		82.31.0006	Electrical Assembly	1		
10	01	30.09.0005	Rubber Blanket	2	-210805	
10	02	20.0156	Pearl Wool	2	210805-	
11	01	33.028.0013	Front Panel	1	-210805	
11	02	40.13.028	Front Panel	1	210805-	
12		03.0116	Screw	4		
13		03.0243	Nut	2		Option
14		40.11.040	Roller	2		Option
15		03.1088	Bolt	2		Option
16		03.0024	Circle For Hole	2		
17		40.11.079	Shaft (560)	1		
17		40.11.035	Shaft (685)	1		

kupit-shtabeler.ru

1.2Connecting Rod Rocker Assembly

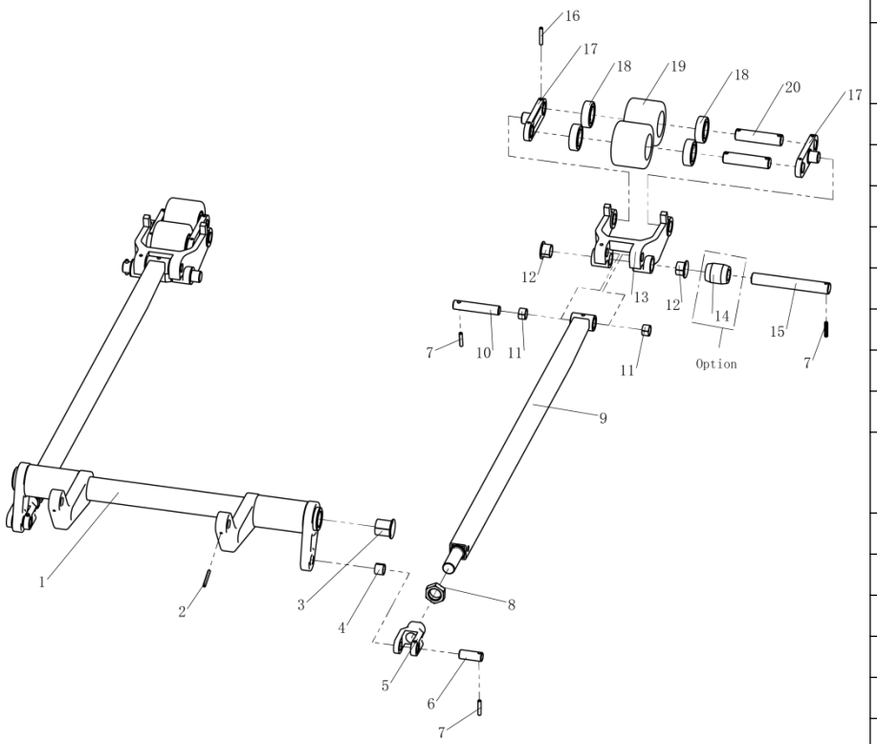

Item		Part No	Description	Qty	Applied Date	Remark
1		33.028.0004	Ring Rod (560)	1		
1		33.028.0003	Ring Rod (685)	1		
2		03.03100	Cylindrical Pin	4		
3		03.04422	Composite Set With Shoulder	2		
4		03.0691	Composite Set	2		
5		40.14.048	Push Rod Bracket	2		
6		40.14.052	Shaft	2		
7		03.0305	Cylindrical Pin	6		
8		03.0286	Nut	2		
9		33.028.0007	Push Rod Welding	2		
10		40.11.038	Shaft	2		
11		03.0451	Composite Set	4		
12		03.0453	Composite Set With Shoulder	4		
13		40.11.037	Wheel Bracket	2		
14		40.11.041	Drop Out Roller	2		Option
15		41.11.036	Shaft	2		
16		03.0303	Cylindrical Pin	8		
17		30.01.1290	Connecting Plate	4		
18		03.90.057	Bearing	8		
19		02.LZ.0128	Small Roller	4		
20		40.11.039	Shaft	4		

kupit-shtabeler.ru

1.3Cover Assembly

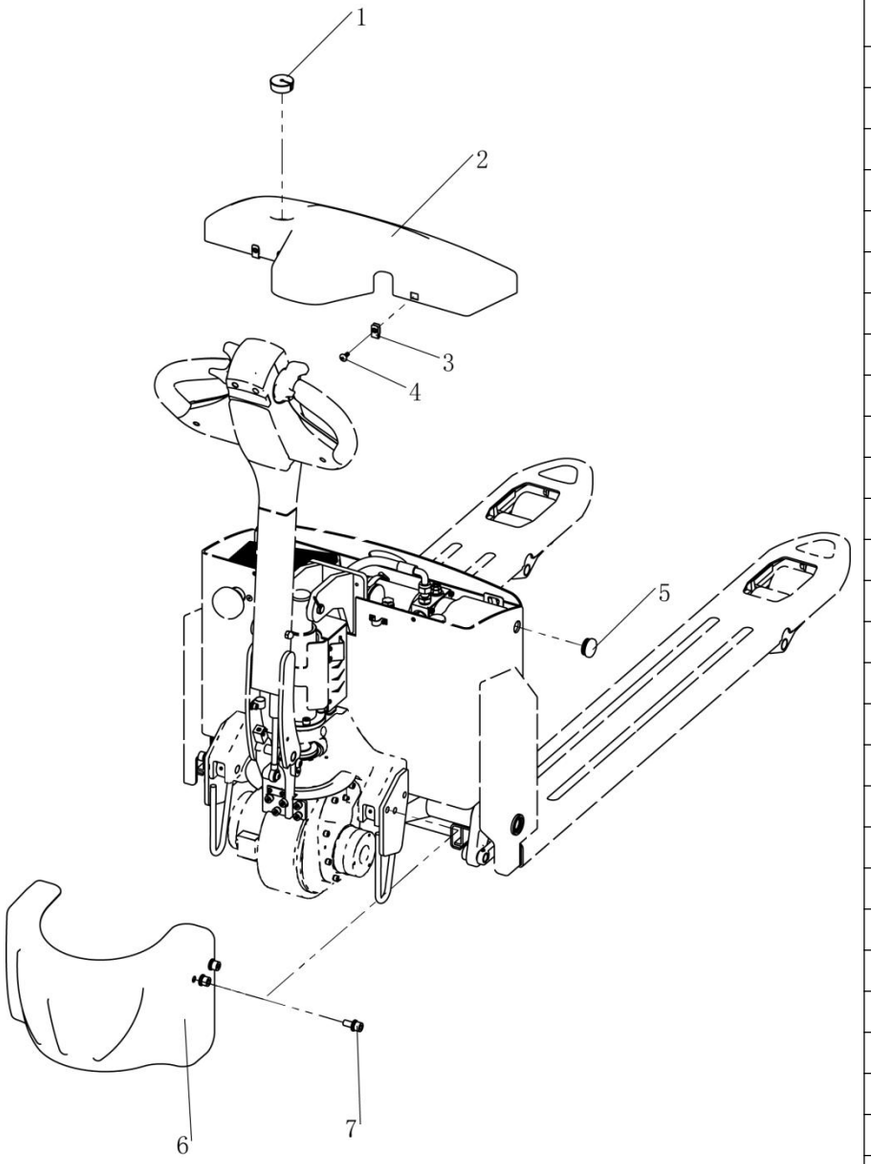

Item		Part No	Description	Qty	Applied Date	Remark
1		02.01.312415	Line Seat	1		
2		40.13.029	Cover	1		
3		03.0587	Buckle Nut	2		
4		03.0240	Screw	2		
5		02.01.2127	Cushion	2		
6		40.11.057	Drive Cover	1		
7		03.1051	Screw	6		

kupit-shtabeler.ru

2.Driving system
2.101Driving system

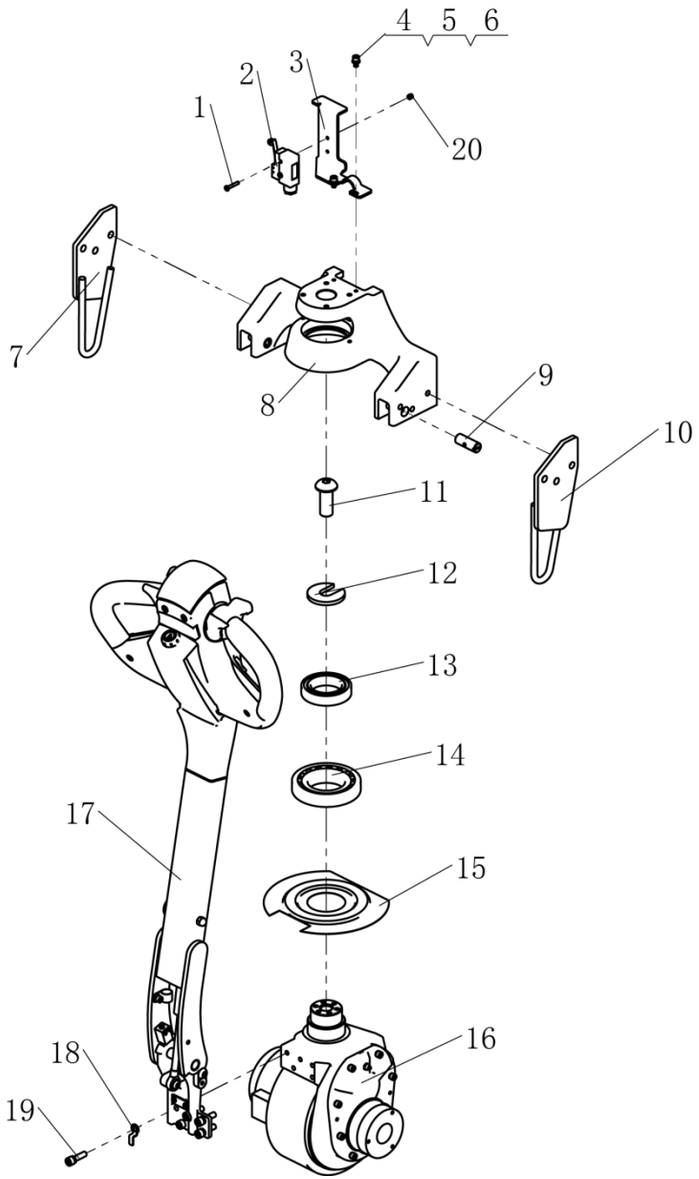

Item		Part No	Description	Qty	Applied Date	Remark
1	01	03.0220	Screw	2	-210906	
1	02	03.0225	Screw	2	210906-	
2		02.01.2182	Micro Switch	1		
3	01	40.13.015	Mounting Plate	1	-210906	
3	02	40.13.035	Mounting Plate	1	210906-	
4		03.0145	Screw	2		
5		03.0011	Spring Washer	2		
6		03.0049	Flat Washer	2		
7		33.022.0011	Balance Frame Left	1		
8		40.13.016	Bearing Bridge	1		
9		40.11.080	Pin	2		
10		33.022.0012	Balance Frame Right	1		
11		03.0118	Hexagon Bolt	1		
12		40.11.055	Driver Board	1		
13		03.90.018	Bearing	1		
14		03.90.023	Bearing	1		
15		40.11.054	Round Cover Plate	1		
16		02.QD.00832	Driving Assembly	1		
17	01	02.SB.ZJ.0007	Handle Components	1	-210906	
17	02	82.46.0007	Handle Components	1	210906-	
17		82.14.002	Handle Components (Intelligent)	1		Option
18		40.15.052	Tension Disc	1		
19		03.01562	Screw	5		
20		19.1091	Nut	2	210906-	

kupit-shtabeler.ru

2.201Driving Assembly

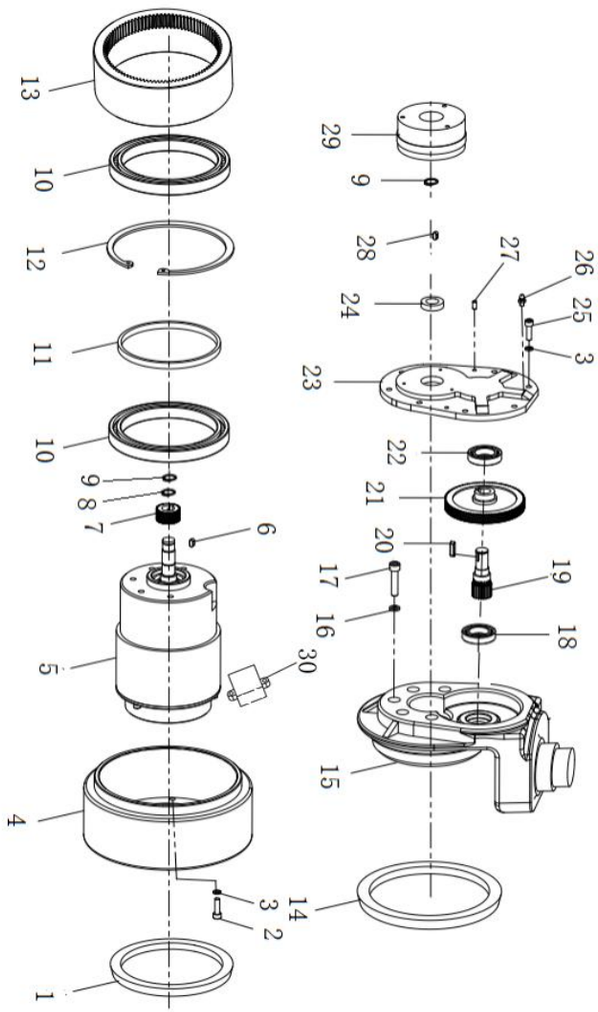

Item		Part No	Description	Qty	Applied Date	Remark
1		02.01.3703	Oil Seal	1		
2		03.0147	Screw	8		
3		03.0011	Spring Washer	16		
4		02.QDL.0272	Driving Wheel	1		
5		02.DJ.00852	Motor	1		
6		03.0716	Flat Key Pin	1		
7		02.01.00702	Driving Gear	1		
8		03.0062	Circlip For Shaft	1		
9		03.0061	Circlip For Shaft	2		
10		02.01.006810	Bearing	2		
11		02.01.9294	Spacer	1		
12		03.0709	Circlip For Hole	1		
13		02.01.00687	Internal Gear	1		
14		02.01.3681	Big Oil Seal	1		
15		02.01.210706	Gearbox	1		
16		03.0012	Spring Washer	5		
17		03.0157	Screw	5		
18		03.90.074	Bearing	1		
19		02.01.00701	Transmission Gear	1		
20		03.0717	Flat Key Pin	1		
21		02.01.00703	DrivenGear	1		
22		03.90.075	Bearing	1		
23		02.01.210707	Gearbox Cover	1		
24		03.0719	Oil Seal	1		
25		03.01049	Screw	8		
26		03.0506	Grease Fitting	1		
27		03.04350	Cylindrical Pin	2		
28		03.0975	Flat Key Pin	1		

kupit-shtabeler.ru

2.201Driving Assembly

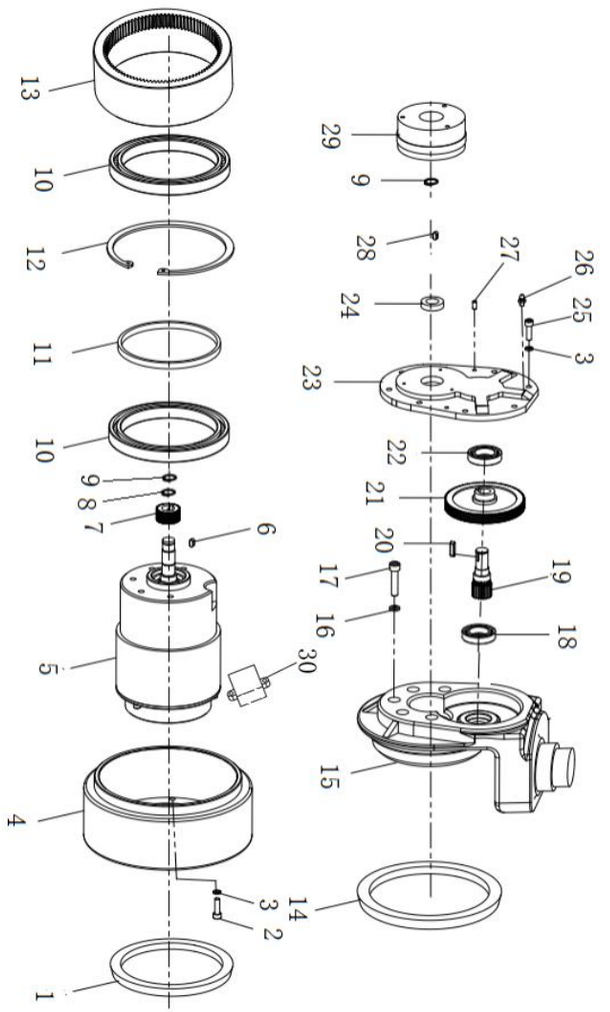

Item		Part No	Description		Qty	Applied Date	Remark
29		02.01.3596	刹车总成	Brake Assembly	1		
30		02.01.0284	接线盒	Terminal Box	1	210906-	

kupit-shtabeler.ru

3.Operating System

3.102Handle Components

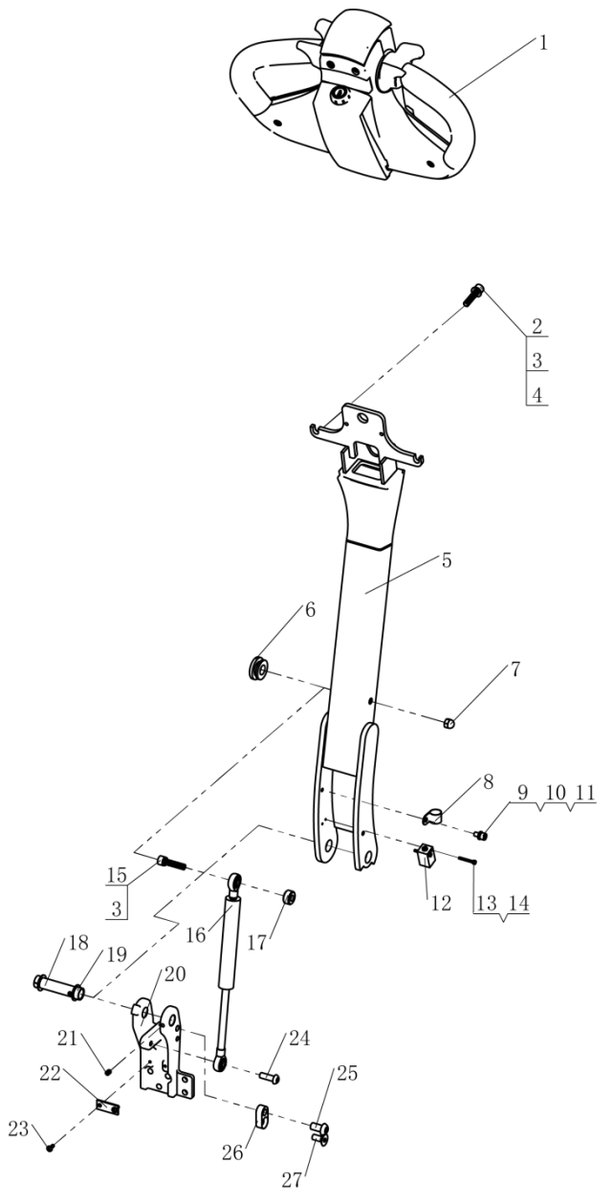

Item		Part No	Description	Qty	Applied Date	Remark
1		02.SB.317518	Big Handle	1		
2		03.0157	Screw	2		
3		03.0012	Spring Washer	3		
4		03.0050	Flat Washer	2		
5		33.015.0009	Handle Bar	1		
6		02.01.2127	Shock Absorber	1		
7		03.0425	Nut	1		
8		03.04617	Clamp	1		
9		03.0145	Screw	1		
10		03.0011	Spring Washer	1		
11		03.0049	Flat Washer	1		
12		02.01.9274	Proximity Switch	1		
13		03.01301	Screw	2		
14		03.00091	Spring Washer	2		
15		03.0158	Screw	1		
16		02.QTH.2217	Gas Spring	1		
17		40.11.066	Spacer	1		
18		40.11.065	Joint Axis	1		
19		03.0452	Composite Set With Shoulder	2		
20		40.11.063	Joint Seat	1		
21		03.0270	Screw	2		
22		40.11.064	Board	1		
23		03.0230	Screw	2		
24		03.01101	Screw	1		
25		03.0163	Screw	1		
26		40.12.031	Stop Block	1		
27		03.0092	Screw	1		

kupit-shtabeler.ru

3.2Big Handle

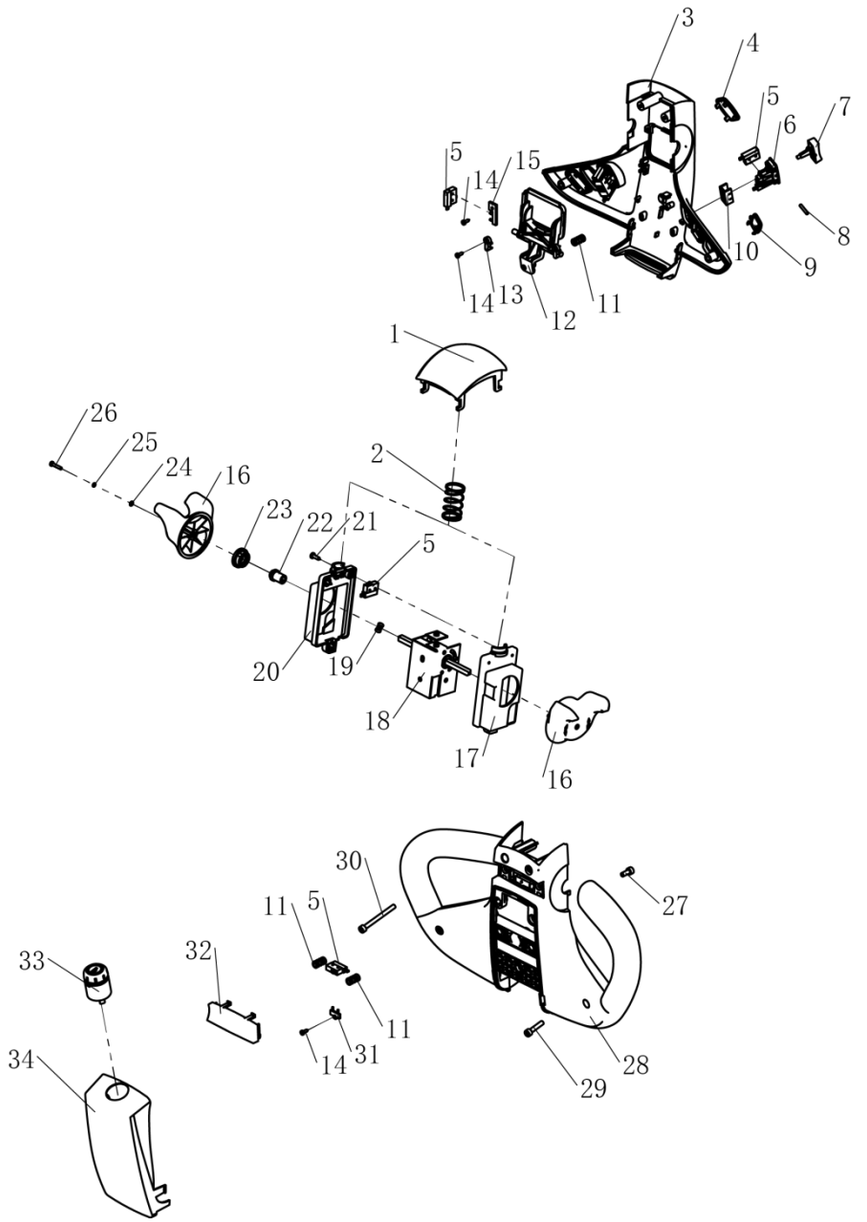

Item		Part No	Description	Qty	Applied Date	Remark
1		16.0038	Belly Switch	1		
2		03.0725	Spring	1		
3		02.01.31770	Upper Cover	1		
4		02.DLB.317702	Electricity Meter	1		
5		02.SB.PJ.0007	Micro Switch	7		
6		02.01.317718	Lift Button Base	2		
7		02.01.317721	Lift Button	2		
8		03.0760	Cylindrical Pin	2		
9		02.01.317725	Button Plug	3		
10		30.01.3427	Fixing Sleeve	2		
11		03.0726	Spring	3		
12		02.01.317723	Horn Button	1		
13		02.01.317724	Button Clip	2		
14		03.0731	Screw	5		
15		02.SB.PJ.0006	Install The Card	1		
16		02.01.317720	Knob	2		
17		30.01.3424	Bracket Right	1		
18		02.01.2151	Accelerator	1		
19		03.0735	Wave Washers	2		
20		30.01.3423	Bracket Left	1		
21		03.0758	Screw	3		
22		30.01.3426	Shaft Sleeve	2		
23		30.01.3425	Shaft Jacket	2		
24		03.0053	Flat Washer	2		
25		03.00091	Spring Washer	2		
26		03.05360	Screw	2		
27		03.0131	Screw	2		
28		02.01.31772	Lower Cover	1		

kupit-shtabeler.ru

3.2Big Handle

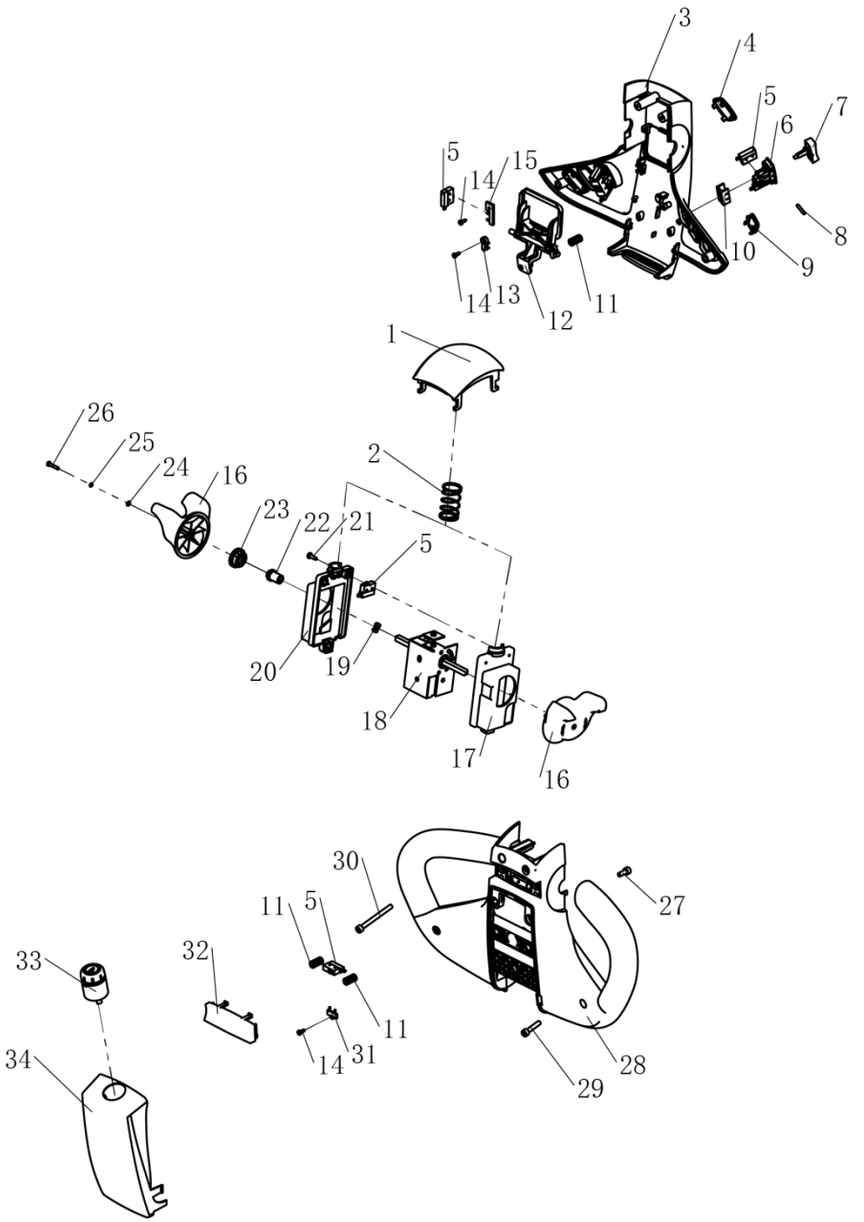

Item		Part No	Description	Qty	Applied Date	Remark
29		03.01410	Screw	2		
30		03.0751	Screw	2		
31		02.01.317726	Install The Card	1		
32		02.01.317719	Mode button	1		
33		02.01.2187	Key Switch	1		
34		02.01.31771	Cover	1		

kupit-shtabeler.ru

3.3Handle Components (Intelligent)

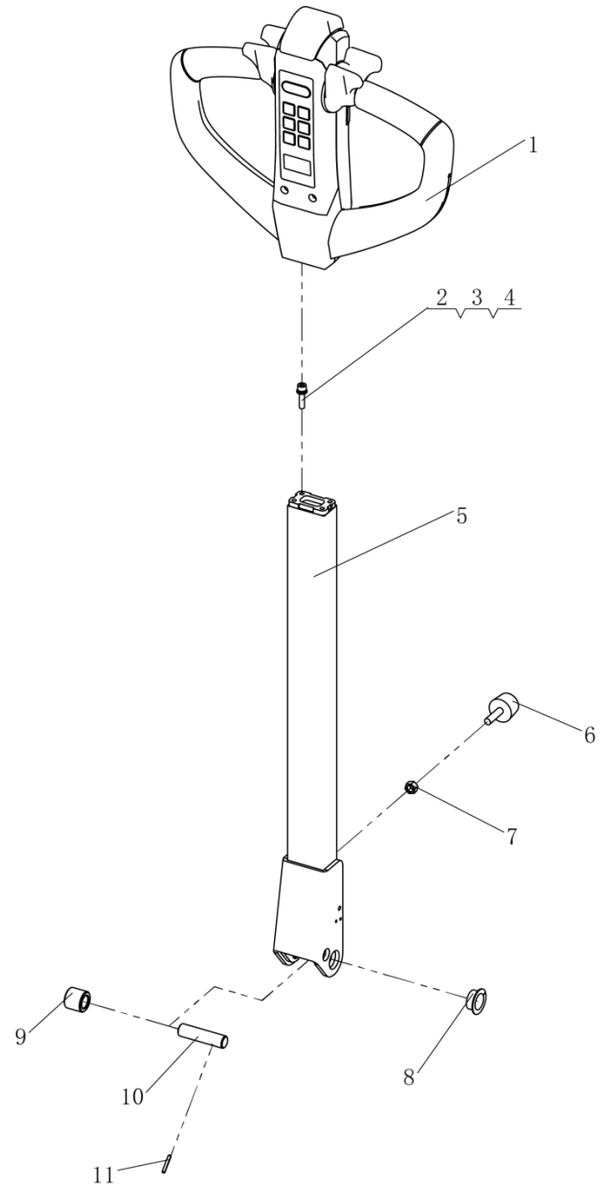

Item		Part No	Description	Qty	Applied Date	Remark
1		02.SB.3196	Electronic Handle	1		
1		02.SB.3194	Electronic Handle	1		Option
2		03.0150	Screw	2		
3		03.0011	Spring Washer	2		
4		03.0049	Flat Washer	2		
5		33.053.0005	Handle	1		
6		02.01.2315	Rubber Washer	1		
7		03.0258	Nut	1		
8		03.0692	Composite set With Shoulder	2		
9		40.14.009	Pressing Roller	1		
10		40.14.008	Shaft	1		
11		03.0702	Cylindrical Pin	1		

kupit-shtabeler.ru

3.4Electronic Handle

Not Provided Separately

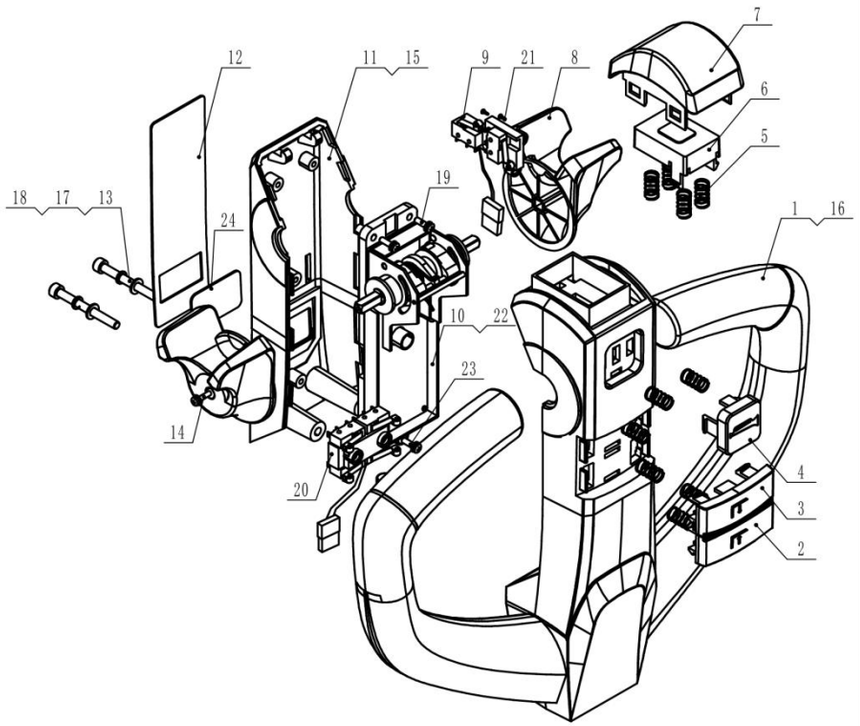

Item		Part No	Description	Qty	Applied Date	Remark
1		001.01.90002001	Handle	1		
2		001.01.90002006	DeclineButton	1		
3		001.01.90002005	RisingButton	1		
4		001.01.90002011	Horn	1		
5		001.01.90002022	Spring	10		
6		001.01.90002010	Inner Cover	1		
7		001.01.90002004	Belly Switch	1		
8		001.01.90002003	Accelerator Knob	2		
9		0902-Z01-002	Switch	1		
10		0902-Z03-011	Accelerator	1		
11		001.01.90002002	Cover	1		
12		001.01.90403004	Button	1		
13		001.01.90101001	Screw	2		
14		001.01.90111005	Screw	2		
15		001.01.90107001	Nut	4		
16		001.01.90107002	Nut	2		
17		001.01.90105002	Spring Washer	2		
18		001.01.90104001	Flat Washer	2		
19		001.01.90111004	Screw	3		
20		0902-Z02-002	Lift Button	1		
21		001.01.90103003	Screw	2		
22		001.01.90701002	Outline Border	1		
23		001.01.90111002	Screw	1		
24		001.01.90003014	Protect Shell	1		

kupit-shtabeler.ru

4.Hydraulic System

4.101Hydraulic Assembly

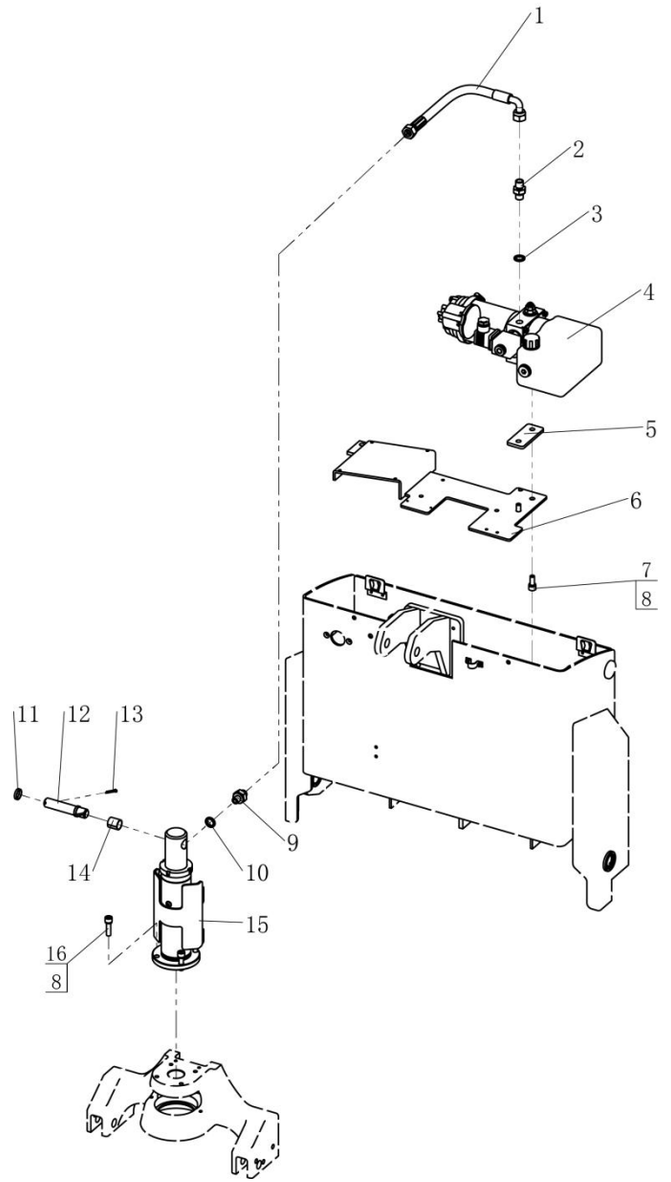

Item		Part No	Description	Qty	Applied Date	Remark
1		02.YYL.32002	Oil Pipe	1		
2		02.01.2356	Direct Head	1		
3		03.0482	Gasket	1		
4		02.DLDY.3473	Power Unit	1		
5		30.09.0003	Cushion	1		
6		33.015.0012	Mounting Plate	1		
7		03.0154	Screw	2		
8		03.0012	Spring Washer	6		
9		02.YG.SJ.9475	Connect	1	210805-	
10		03.0482	Gasket	1	210805-	
11		03.0332	Open Pin	2		
12		40.13.023	Gasket	2		
13		40.12.022	Shaft	1		
14		03.0459	Composite Set	2	210805-	
15	01	02.YG.20755	Oil Cylinder Assembly	1	-210805	
15	02	02.YG.SJ.9477	Oil Cylinder Assembly	1	210805-	
16		03.0157	Screw	4		

kupit-shtabeler.ru

4.2Cylinder Assembly

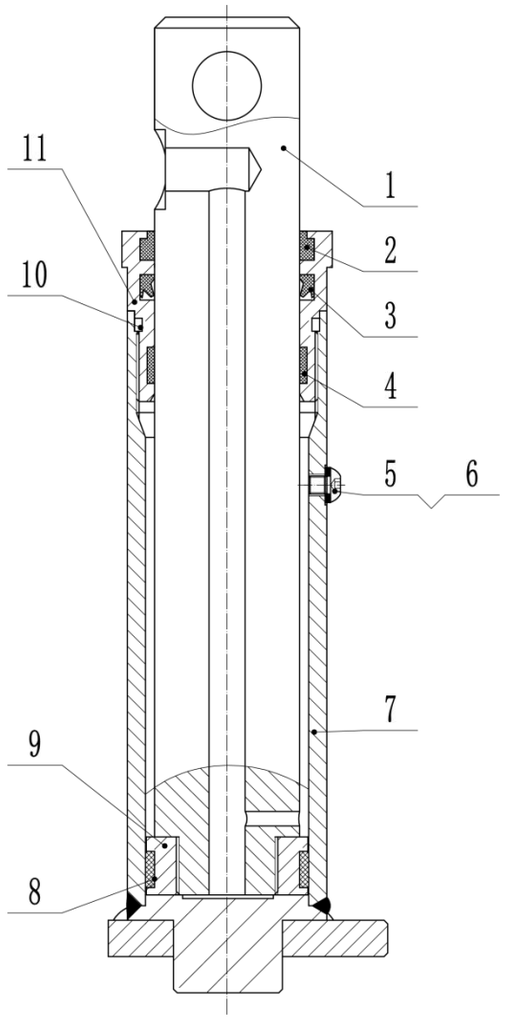

Item		Part No	Description	Qty	Applied Date	Remark
1		02.YG.SJ.9481	Piston Rod	1		
2		02.01.01816	Scraper Seal	1		
3		02.01.0002	Gasket Ring	1		
4		02.01.9195	Retaining Ring	1		
5		03.0109	Screw	1		
6		03.0926	Flat Washer	1		
7		02.YG.SJ.9480	Cylinder Block	1		
8		02.01.9195	Retaining Ring	1		
9		02.YG.SJ.9479	Blind Nut	1		
10		02.01.33251	O-Ring	1		
11		02.YG.SJ.9478	End Cap	1		

kupit-shtabeler.ru

5.Electric System

5.101Electric Assembly

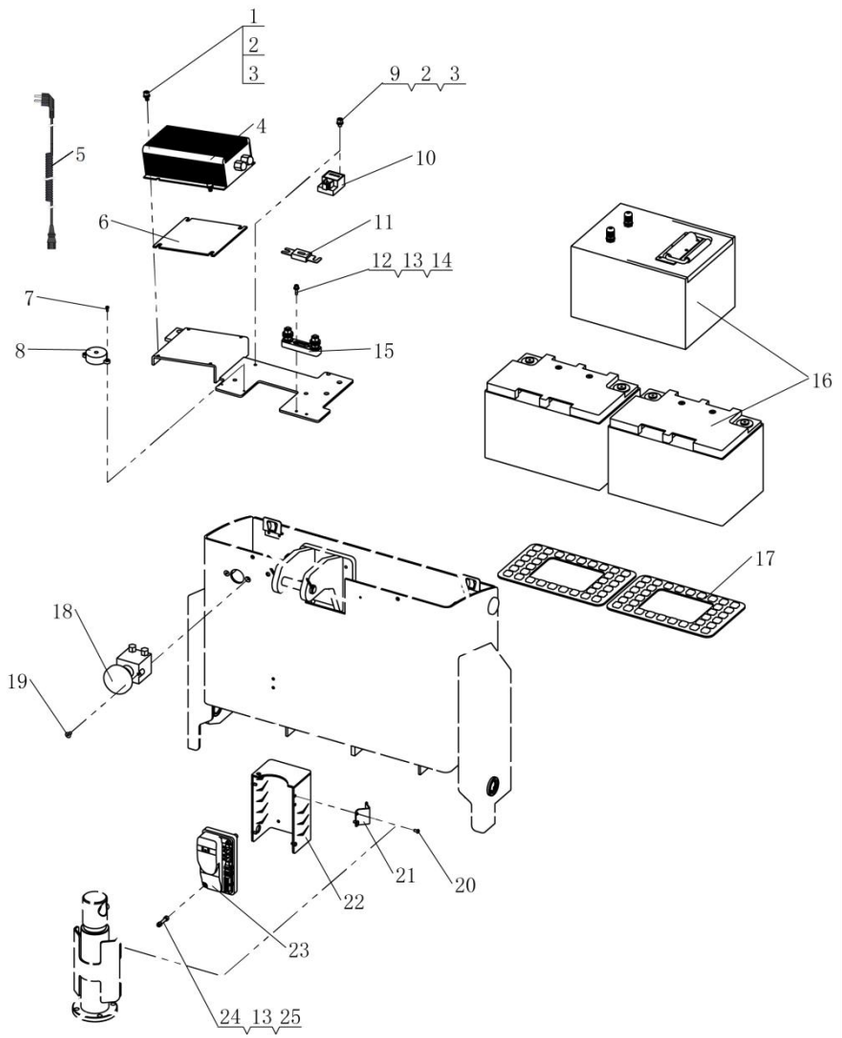

Item		Part No	Description	Qty	Applied Date	Remark
1		03.0145	Screw	4		
2		03.0011	Spring Washer	5		
3		03.0049	Flat Washer	5		
4		02.CDQ.330513	Charger	1		
4	01	02.CDQ.3392	Charger	1	-210805	Option
4	02	02.CDQ.3505	Charger	1	210805-	Option
5		16.0347	Asian Standard Spring Wire	1		
5		16.0324	EU Standard Spring Wire	1		
5		16.0346	U.K Standard Spring Wire	1		
5		16.0348	U.S Standard Spring Wire	1		
6		30.09.0004	Cushion	1		
7		03.02151	Screw	2		
8		19.03620	Buzzer	1		
9		03.0175	Screw	1		
10		02.01.2216	Relay	1		
11		19.03450	fuse	1		
12		03.0133	Screw	2		
13		03.0007	Spring Washer	4		
14		03.0055	Flat Washer	2		
15		02.01.3057	Fuse Base	1		
16		02.XDC.2216	Battery	2		
16		02.XDC.3388	Lithium Battery			Option
17		30.09.0007	Battery Pad	2		
18		02.01.2169	Switch	1		

kupit-shtabeler.ru

5.Electric System

5.101Electric Assembly

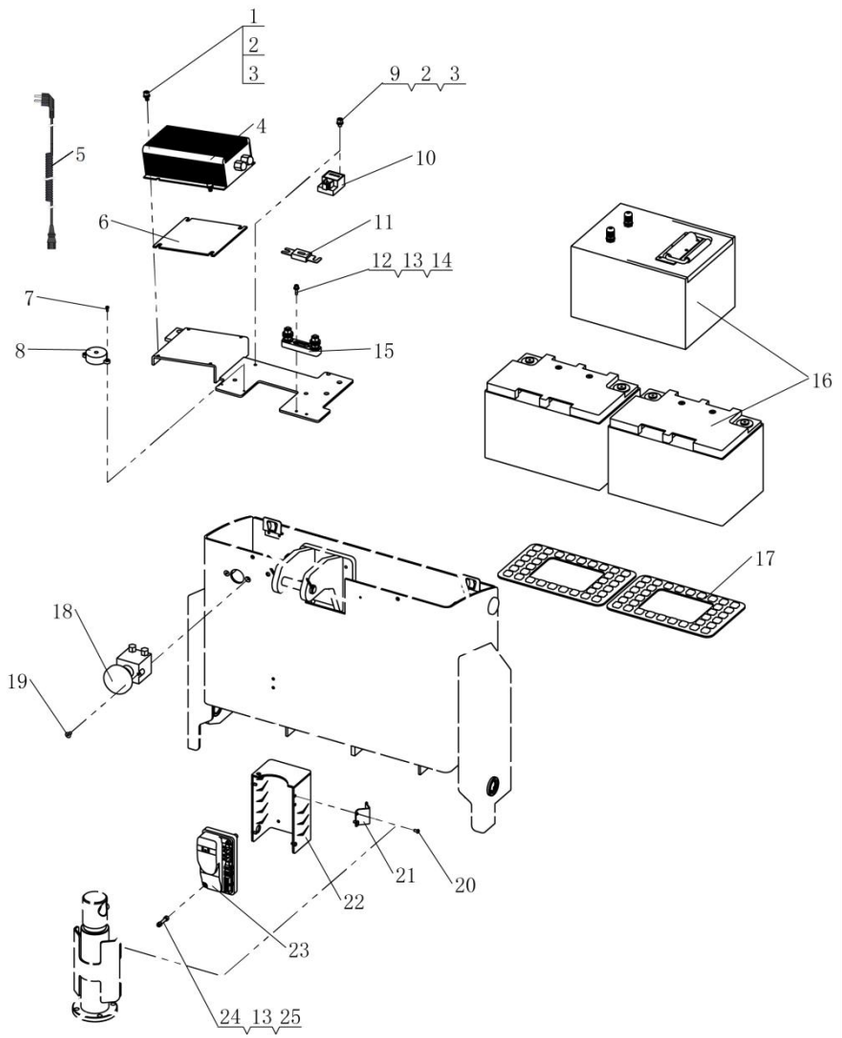

Item		Part No	Description	Qty	Applied Date	Remark
19		03.0082	Screw	2		
20		03.01174	Screw	5		
21		40.12.025	Line Card	1		
22		30.09.0115	Cover	1		
23		02.KZQ.2167	Controller	1		
23		02.KZQ.2377	Controller	1		Option
23		02.KZQ.2376	Controller	1		
24		03.01330	Screw	2		
25		03.0255	Nut	2		

kupit-shtabeler.ru

5.2Cable Assembly

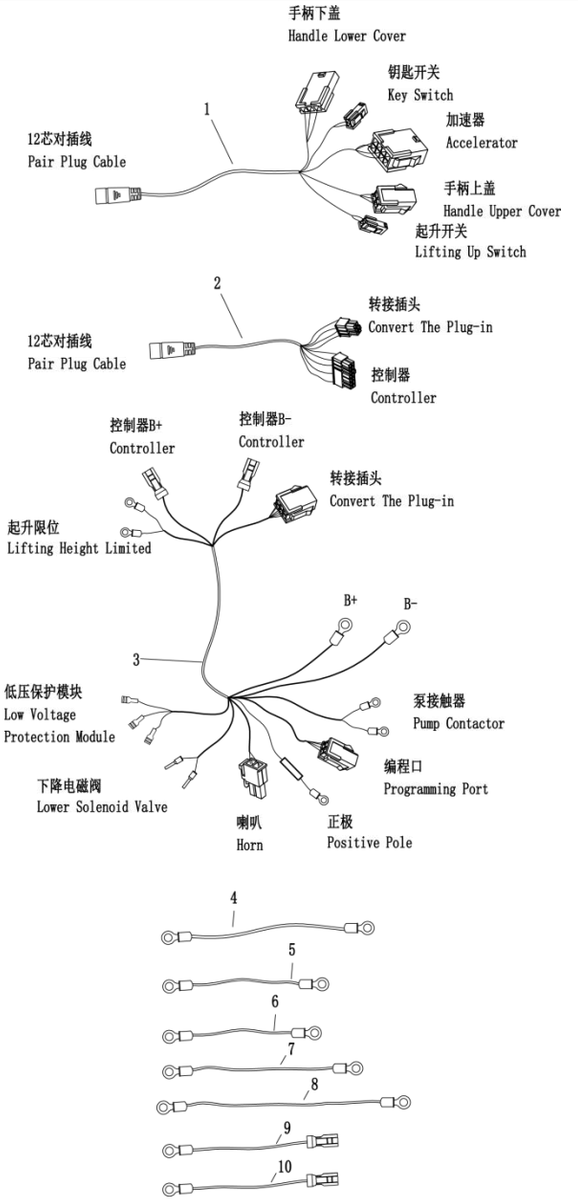

Item		Part No	Description	Qty	Applied Date	Remark
1		02.XSXC.PJ.0039	Handle Wiring Harness	1		
2		02.XSXC.PJ.0040	Frame Wiring Harness	1		
3		02.XSXC.PJ.0041	Frame Wiring Harness	1		
4		02.XSXC.PJ.4017	Emergency Stop-Fuse	1		
5		02.XSXC.PJ.4018	Pump Positive Wire	1		
6		02.XSXC.PJ.4019	Battery Wire	1		
7		02.XSXC.PJ.4020	Pump Negative Wire	1		
8		02.XSXC.PJ.4017	Battery-Emergency Stop	1		
9		02.XSXC.PJ.4023	Motor Wire	1		
10		02.XSXC.PJ.4024	Motor Wire	1		

kupit-shtabeler.ru

5.3Cable Assembly（Intelligent）

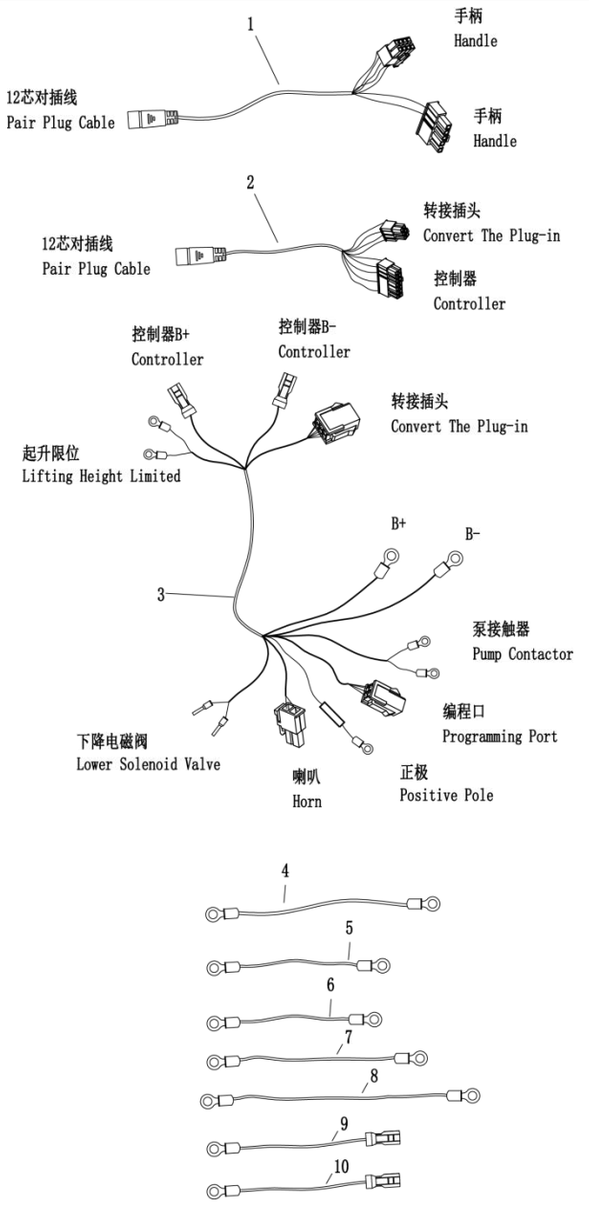

Item		Part No	Description	Qty	Applied Date	Remark
1		02.XSXC.PJ.0042	Handle Wiring Harness	1		
2		02.XSXC.PJ.0043	Frame Wiring Harness	1		
3		02.XSXC.PJ.0044	Frame Wiring Harness	1		
4		02.XSXC.PJ.4017	Emergency Stop-Fuse	1		
5		02.XSXC.PJ.4018	Pump Positive Wire	1		
6		02.XSXC.PJ.4019	Battery Wire	1		
7		02.XSXC.PJ.4020	Pump Negative Wire	1		
8		02.XSXC.PJ.4017	Battery-Emergency Stop	1		
9		02.XSXC.PJ.4023	Motor Wire	1		
10		02.XSXC.PJ.4024	Motor Wire	1		

kupit-shtabeler.ru

The manufacturer reserves the right to interpret this part catalogue