kupit-shtabeler.ru

## 本零件目录汇集了1.6t/1.8t/2t电动托盘搬运车的零部件

### 查询方法

步骤一：在检索目录中找到系统或总成该图所在页次并翻至所标页次，找到该图；

步骤二：在其图中找出所需零部件，以及它所标注的序号；

步骤三：根据这个序号，在其后附表中可以查到系统或零件的详细信息。

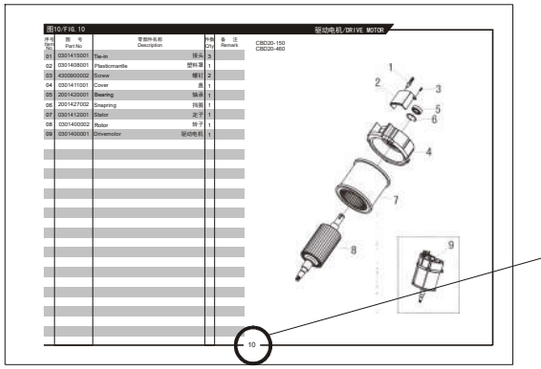


### 订购零部件时，务请写清叉车的型号、出厂编号、所需零部件的图号及订购数量

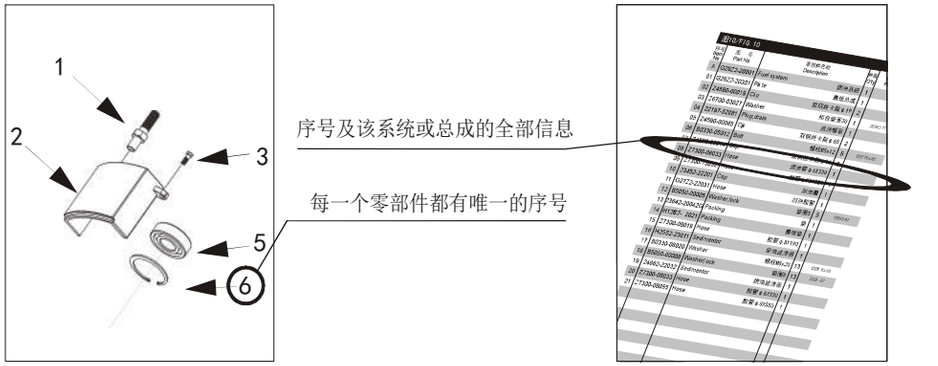


### 在维修时，请使用正规渠道提供的本公司零部件，以确保叉车质量

### 恕不能将本产品可能进行的零部件改进在本图册中同时修改，您可以从本公司的销售和配件公司获得最新资料

### 叉车型号说明

C B D 20-180

| | |
|---|---|
| 产品配置号 | 20-180 |
| 2吨 | C |
| 电动 | B |
| 托盘搬运车 | D |

### 具体车型

CBD16-180
CBD18-180
CBD20-180

kupit-shtabeler.ru

# THIS PARTS CATALOGUE COVERS PARTS IN THE MOST OF 1.6/1.8/2 TON ELECTRIC PALLET TRUCKS

## Indexing Way

**Step1:Finding out the page for the system or assembly** required from the indexing contents and turn to the required page, finding out the concerned drawing;

**Step2:From the detail drawing,find out the parts and** their item numbers.

**Step3:According to these item numbers, find out details** of these parts of the system or assembly from attached table.

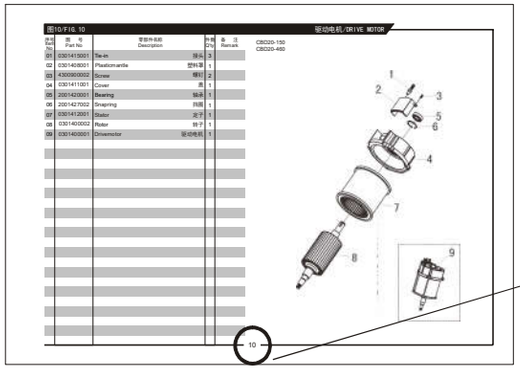


**When ordering the parts or components,please indicate the model and series number of the your forklift truck,the drawing number of parts or components you require and their quantity.**

**When you replace parts or components,please apply the real goods made by our company to ensure the truck's guality.**

**We reserve modification right without notice**

**Designations in the CATALOGUE**

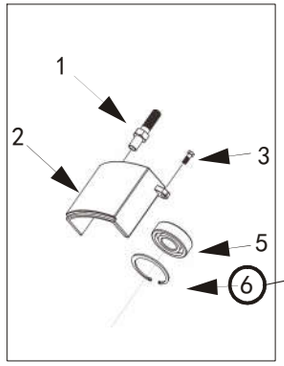


According to these item numbers, find out details of hese parts or the system from attached table.

Every part or componet in the drawing is expressed with only item number

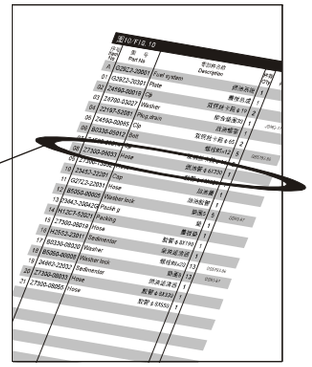

C B D 20-180

| |
|---|
| Configuration Number |
| 2 ton capacity |
| Electric |
| pallet trucks |

**The following trucks**

CBD16-180
CBD18-180
CBD20-180

kupit-shtabeler.ru

## 目录/INDEX


| | | |
|---|---|---|
| 图1 转向操纵系统 | 1 | Fig.1 Steering control system |
| 图2 手柄总成 | 2 | Fig.2 Handle assembly |
| 图3 控制盒总成 | 3 | Fig.3 Switch box assembly |
| 图4 行走开关总成 | 4 | Fig.4 Stepped switch assembly |
| 图5 变速箱总成 | 5 | Fig.5 Gear box assembly |
| 图6 交流电机 | 6 | Fig.6 Motor |
| 图7 机架总成 | 7 | Fig.7 Frame |
| 图8 万向轮 | 8 | Fig.8 Balance wheel assembly |
| 图9 液压系统 | 9 | Fig.9 Hydraulic system |
| 图10 液压动力单元 | 10 | Fig.10 Hydraulic power unit |
| 图11 车身系统 | 11 | Fig.11 Frame |
| 图12 外壳 | 12 | Fig.12 Compartment |
| 图13 配电板总成 | 13 | Fig.13 Electrical appliance assembly |
| 图14 萨牌配电板总成 | 14 | Fig.14 ZAPI electrical appliance assembly |
| 图15 单轮总成 | 15 | Fig.15 Single wheel assembly |
| 图16 双轮总成 | 16 | Fig.16 Double wheel assembly |
| 图17 电池组件 | 17 | Fig.17 Battery assembly |

kupit-shtabeler.ru



kupit-shtabeler.ru

## 图1/FIG.1 转向操纵系统/STEERING CONTROL SYSTEM

| 序号 Item No | 图号 Part No | 零部件名称 Description | 件数 Q'ty | 备注 Remark |
|---|---|---|---|---|
| 01 | 1800500001 | Handle assembly 手柄总成 | 1 | |
| 02 | 1800531001 | Screw 螺钉 | 2 | |
| 03 | 2001437005 | Washer 垫圈 | 2 | |
| 04 | 1800508001 | Outer covering plate 手柄座盖板 | 1 | |
| 05 | 1800513001 | Shaft 轴 | 1 | |
| 06 | 2000512002 | Lubricated bush 自润滑轴承 | 2 | |
| 07 | 2000536001 | Spring pin 弹性销 | 1 | |
| 08 | 2000525004 | Screw 螺钉 | 1 | |
| 09 | 2000507004 | Inching switch 微动开关 | 1 | |
| 10 | 2000541001 | Screw 螺钉 | 2 | |
| 11 | 2000537003 | Washer 垫圈 | 2 | |
| 12 | 2000535005 | Installing plate 调整块 | 1 | |
| 13 | 2000541003 | Screw 螺钉 | 2 | |
| 14 | 2000537001 | Washer 垫圈 | 2 | |
| 15 | 2000508002 | Plate 内盖板 | 1 | |
| 16 | 2000931004 | Screw 螺钉 | 2 | |
| 17 | 4300501001 | Handle socket 手柄支架 | 1 | |
| 18 | 2000541004 | Screw 螺钉 | 2 | |
| 19 | 2000513003 | Pin shaft 销轴 | 1 | |
| 20 | 2000534002 | Rubber sleeve 轴套 | 1 | |
| 21 | 2000534003 | Rubber washer 缓冲垫 | 1 | |
| 22 | 2000504001 | Steel ball 钢球 | 1 | |

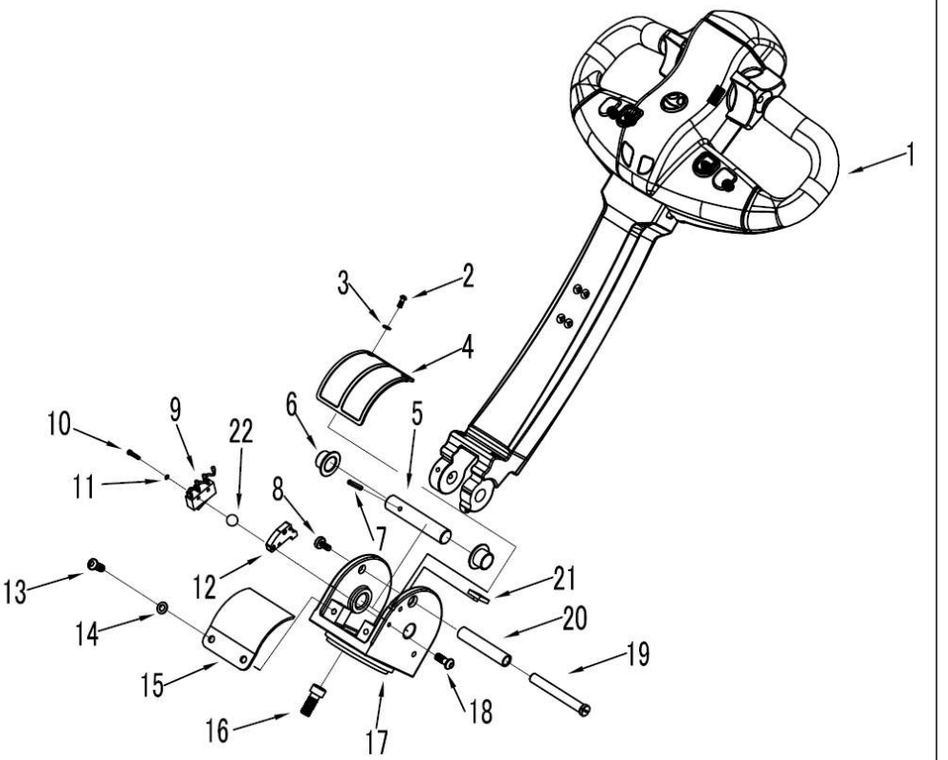


1

kupit-shtabeler.ru

## 图2/FIG.2 手柄总成/HANDLE ASSEMBLY

| 序号 Item No | 图号 Part No | 零部件名称 Description | 件数 Q'ty | 备注 Remark |
|---|---|---|---|---|
| 01 | 5300500002 | Switch box assembly 控制盒总成 | 1 | |
| 02 | 2000542001 | Screw 螺钉 | 6 | |
| 03 | 0600508001 | Plate 手柄盖板 | 1 | |
| 04 | 2000525012 | Joint 气弹簧球头 | 1 | |
| 05 | 0600534001 | Soleplate 气弹簧安装座 | 1 | |
| 06 | 6000419001 | Pneumatic spring complete 气弹簧 | 1 | |
| 07 | 2000520003 | Joint 气弹簧下接头 | 1 | |
| 08 | 1000527001 | Detent ring 轴用挡圈 | 1 | |
| 09 | 2000525006 | Screw 气弹簧固定螺钉 | 1 | |
| 10 | 2000527002 | Detent ring 轴用挡圈 | 1 | |
| 11 | 0600517001 | Hand shank 铝手柄 | 1 | |
| 12 | 2000442001 | Screw 螺钉 | 4 | |
| 13 | 1800500001 | Handle assembly 手柄总成 | 1 | |

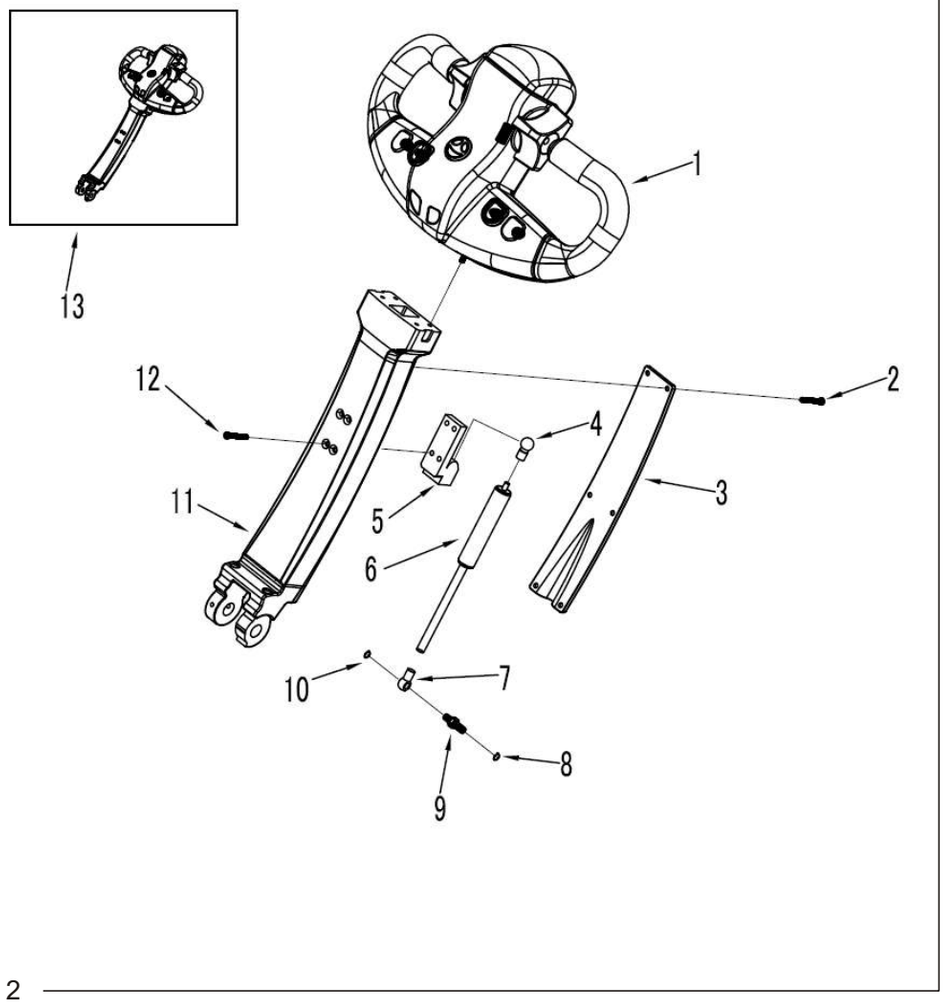


2

kupit-shtabeler.ru

## 图3/FIG.3 控制盒总成/SWITCH BOX ASSEMBLY

| 序号 Item No | 图号 Part No | 零部件名称 Description | 件数 Q'ty | 备注 Remark |
|---|---|---|---|---|
| 01 | 5300500002 | Switch box assembly 控制盒总成 | 1 | |
| 02 | 5300518003 | Emergency reverser button cover 紧急换向按钮盖 | 1 | |
| 03 | 2000519004 | Spring 弹簧 | 1 | |
| 04 | 5300500001 | Cover assembly 手柄盖总成 | 1 | |
| 05 | 4300500004 | Stepped switch assembly 行走开关总成 | 1 | |
| 06 | 2000507002 | Emergency reverser button 紧急换向按钮 | 1 | |
| 07 | 9300517001 | Seat 微动开关座 | 2 | |
| 08 | 5300517002 | Handle 手柄 | 1 | |
| 09 | 6000131001 | Screw 螺钉 | 4 | |
| 10 | 1001437003 | Washer 垫圈 | 4 | |
| 11 | 1200518001 | Supporting plate 支撑板 | 1 | |
| 12 | 3201431001 | Screw 螺钉 | 2 | |
| 13 | 6000131006 | Screw 螺钉 | 2 | |

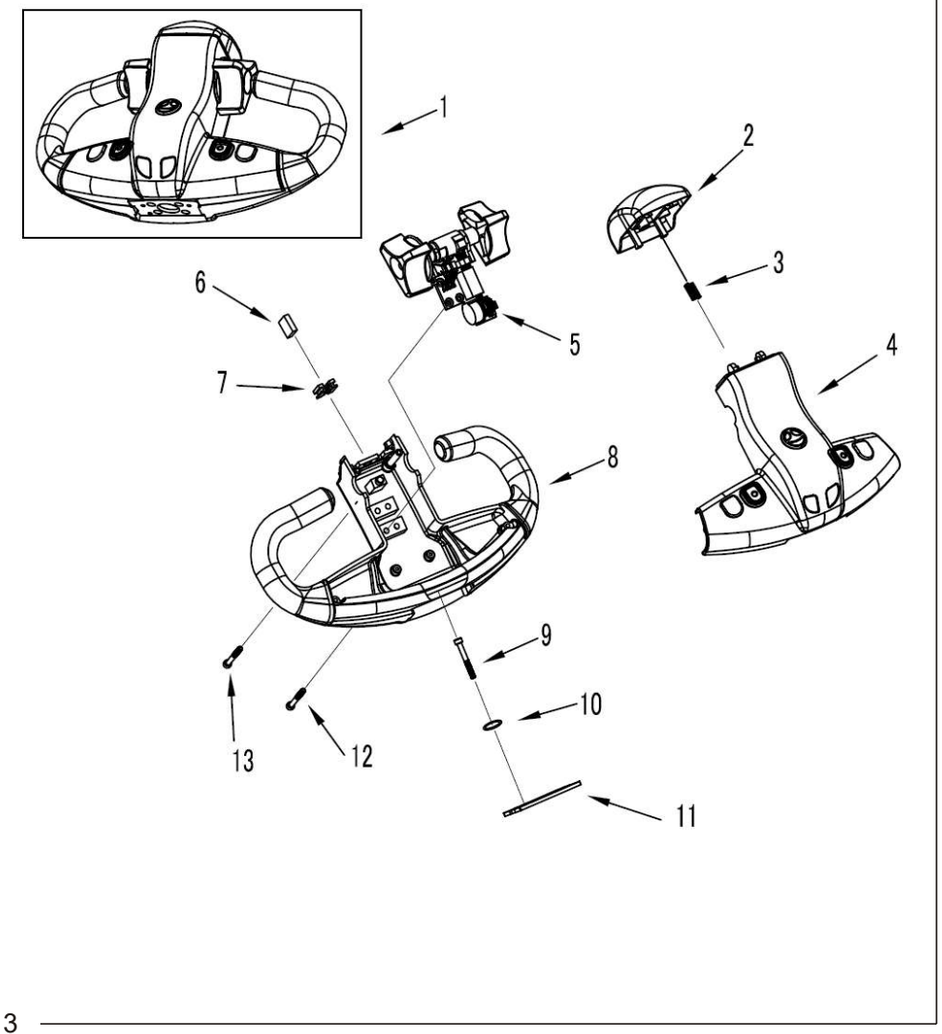


3

## 图4/FIG.4 行走开关总成/STEPPED SWITCH ASSEMBLY

| 序号 Item No | 图号 Part No | 零部件名称 Description | 件数 Q'ty | 备注 Remark |
|---|---|---|---|---|
| 01 | 4300500004 | Stepped switch assembly 行走开关总成 | 1 | |
| 02 | 2000538005 | Screw 螺钉 | 2 | |
| 03 | 2000507003 | Inching switch 微动开关 | 2 | |
| 04 | 2000535001 | Isolate block 绝缘块 | 2 | |
| 05 | 2001141005 | Screw 螺钉 | 4 | |
| 06 | 4300518003 | Fastening bracket 固定支架 | 1 | |
| 07 | 1000504001 | Washer 垫圈 | 4 | |
| 08 | 2000539002 | Nut 螺母 | 2 | |
| 09 | 4300501005 | Cam 凸轮 | 1 | |
| 10 | 4300513001 | Cam Shaft 凸轮安装轴 | 1 | |
| 11 | 1002343003 | Rack 齿条 | 1 | |
| 12 | 2000519004 | Spring 弹簧 | 1 | |
| 13 | 4300900002 | Screw 螺钉 | 2 | |
| 14 | 2001437005 | Spring washer 垫圈 | 2 | |
| 15 | 4300540001 | Right control knob 右控制手柄 | 1 | |
| 16 | 4300512001 | Shaft sleeve 轴套 | 2 | |
| 17 | 4300535001 | Fastening bracket 固定支架 | 1 | |
| 18 | 2000541004 | Screw 螺钉 | 4 | |
| 19 | 4300540002 | Left control knob 左控制手柄 | 1 | |
| 20 | 4300518004 | Baffle 挡板 | 1 | |
| 21 | 2000521001 | Gear 齿轮 | 1 | |
| 22 | 4700418001 | Fastening bracket 固定支架 | 1 | |
| 23 | 4700400001 | Potentiometer 电位器 | 1 | |

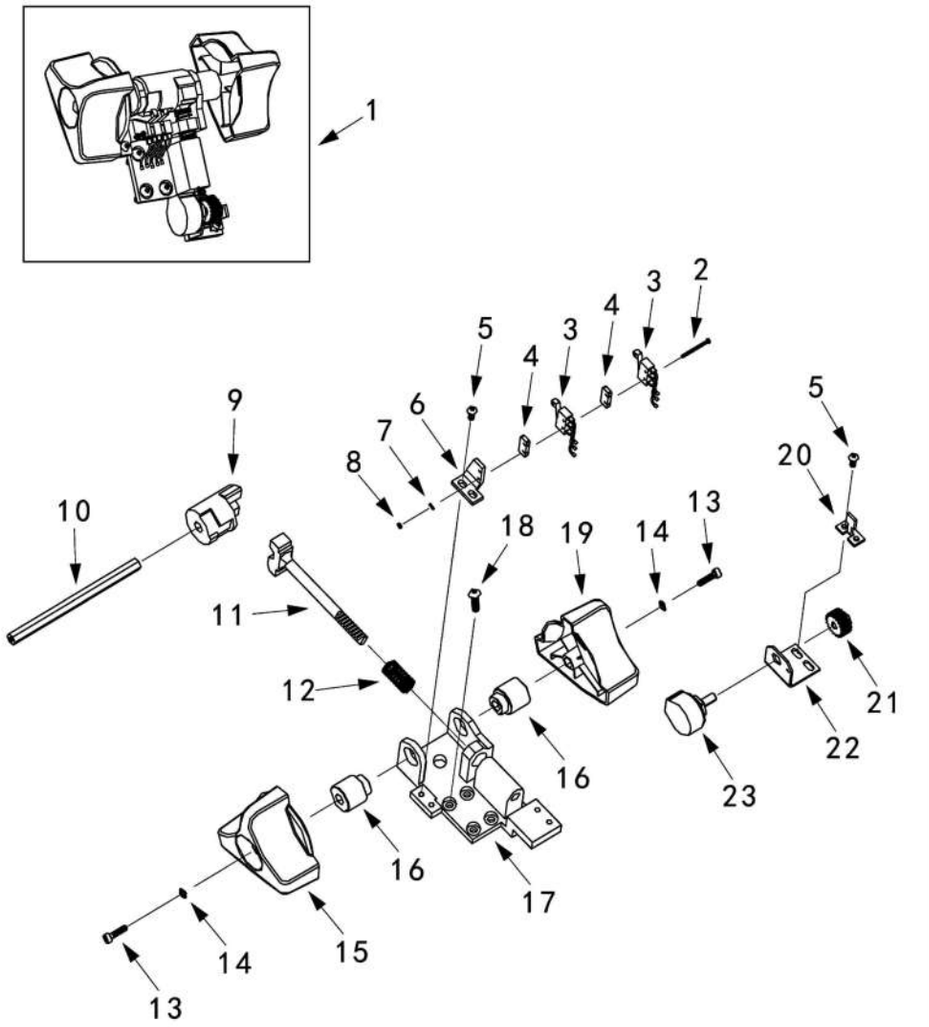


4

## 图5/FIG.5 变速箱总成/GEAR BOX ASSEMBLY

| 序号 Item No | 图号 Part No | 零部件名称 Description | 件数 Q'ty | 备注 Remark |
|---|---|---|---|---|
| 01 | 1800300002 | Gear box assembly 变速箱总成 | 1 | |
| 02 | 1800302002 | Shell cover 电机端盖 | 1 | |
| 03 | 1001031003 | Screw 内六角螺丝M8x20 | 6 | |
| 04 | 1800320001 | Bearing 转向轴承 | 1 | |
| 05 | 2000831001 | Screw 内六角螺丝M6x25 | 6 | |
| 06 | 1800320002 | Sprocket wheel 转向被动链轮 | 1 | |
| 07 | 1801238001 | Bolt 六角头螺栓M8x16 | 4 | |
| 08 | 1800320003 | Gear case cover 齿轮箱箱体顶盖 | 1 | |
| 09 | 2000125001 | Nut 大斜齿轮锁紧螺母 | 1 | |
| 10 | 1800121001 | Pin gear 电机斜齿轮 | 1 | |
| 11 | 2000120003 | Bearing 圆锥滚子轴承 | 2 | |
| 12 | 1800201001 | Bevel gear 弧齿锥齿轮（小） | 1 | |
| 13 | 4000101001 | Key 平键 | 1 | |
| 14 | 2000541004 | Screw 半圆头螺丝M5x16 | 7 | |
| 15 | 1800111001 | Cover 齿轮箱箱体侧盖 | 1 | |
| 16 | 1801228001 | O-ring 0型圈160x2.5 | 1 | |
| 17 | 1800125001 | Nut 大轮花键固定螺母 | 1 | |
| 18 | 2000121002 | Bevel gear 弧齿锥齿轮（大） | 1 | |
| 19 | 2000120002 | Bearing 圆锥滚子轴承 | 1 | |
| 20 | 2000137001 | Spacer 大锥齿轮调整垫片 | 1 | |
| 21 | 1800126001 | Gearbox 驱动箱箱体 | 1 | |
| 22 | 2000731003 | Screw 内六角螺丝M8x40 | 6 | |
| 23 | 2000120001 | Bearing 圆锥滚子轴承 | 1 | |
| 24 | 2000105001 | Seal 内包骨架唇形密封圈 | 1 | |
| 25 | 1800121002 | Gear shaft 大轮花键轴 | 1 | |
| 26 | 1800332001 | Driving wheel 驱动大轮 | 1 | |
| 27 | 1800320004 | Spacer 螺丝垫 | 1 | |
| 28 | 0301031001 | Screw 内六角螺丝M6x12 | 5 | |
| 29 | 2000325002 | Nut 驱动轮固定螺母 | 5 | |

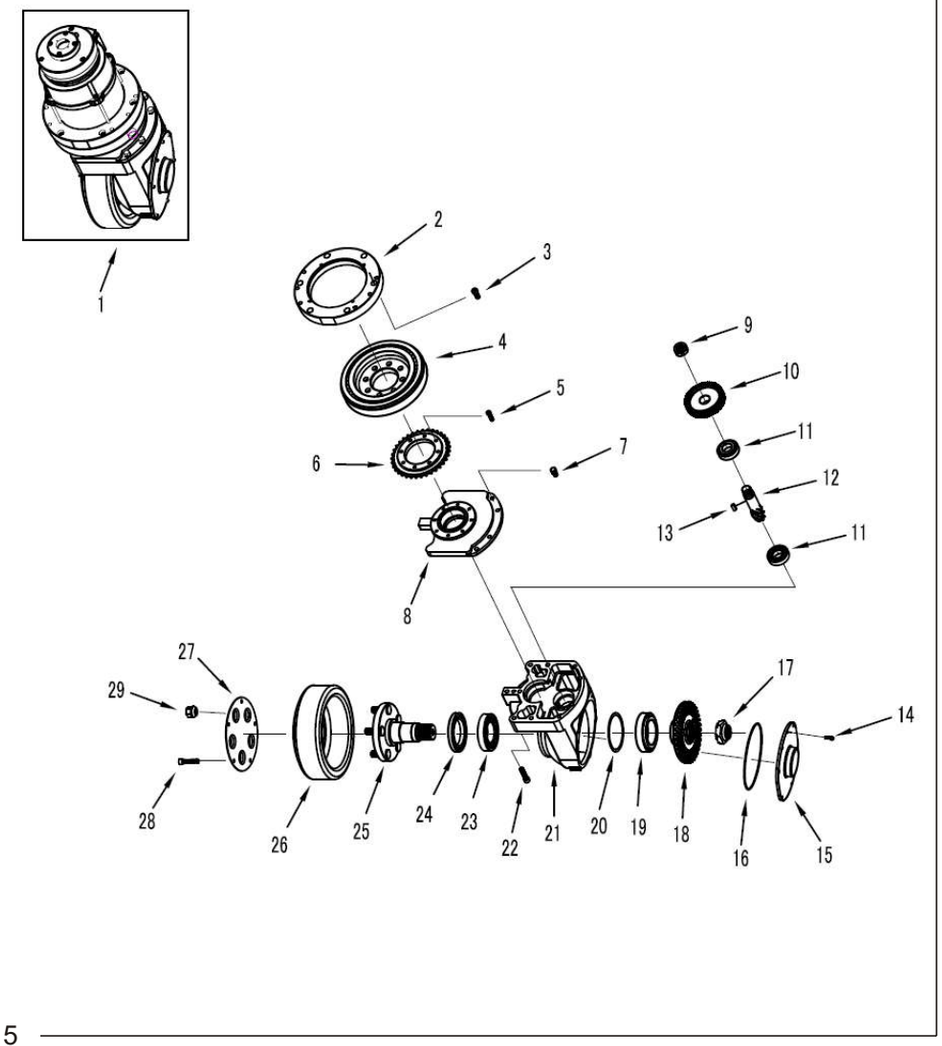


5

## 图6/FIG.6 交流电机/MOTOR

| 序号 Item No | 图号 Part No | 零部件名称 Description | 件数 Q'ty | 备注 Remark |
|---|---|---|---|---|
| 01 | 2001441001 | Screw 螺钉 | 4 | |
| 02 | 1801411001 | Cover 刹车盘上盖 | 1 | |
| 03 | 1801411002 | Wire saddle 线套 | 1 | |
| 04 | 7801006001 | Circuit board 编码器线路板 | 1 | |
| 05 | 0301000004 | Electromagnetic brake assembly 电磁制动器 | 1 | |
| 06 | 4601402001 | Magnetic base 强磁座 | 1 | |
| 07 | 2001427001 | Detent ring 轴用挡圈 | 1 | |
| 08 | 4001404001 | Flat key 键 | 1 | |
| 09 | 2001021001 | Sleeve 花键轴套 | 1 | |
| 10 | 4600628001 | O-ring 0型圈 | 1 | |
| 11 | 2001012001 | Bush 衬套 | 1 | |
| 12 | 1801438001 | Screw 内六角圆柱头螺钉 | 4 | |
| 13 | 1801400001 | Motor 交流电机 | 1 | |
| 14 | 2001405001 | Seal 内包骨架唇形密封圈 | 1 | |
| 15 | 0301435001 | Locating sleeve 电机轴过渡定位套 | 1 | |
| 16 | 2001228001 | O-ring 0型圈 | 1 | |
| 17 | 0301437001 | Detent ring 波形弹性挡圈 | 1 | |
| 18 | 2001420001 | Bearing 轴承 | 1 | |
| 19 | 2001227003 | Detent ring 孔用挡圈 | 1 | |
| 20 | 2000141001 | Key 平键 | 1 | |
| 21 | 1800121003 | Pin gear 电机斜齿轮 | 1 | |
| 22 | 1801438002 | Detent ring 轴用挡圈 | 1 | |
| 23 | 0301000002 | Base 刹车底座总成 | | |

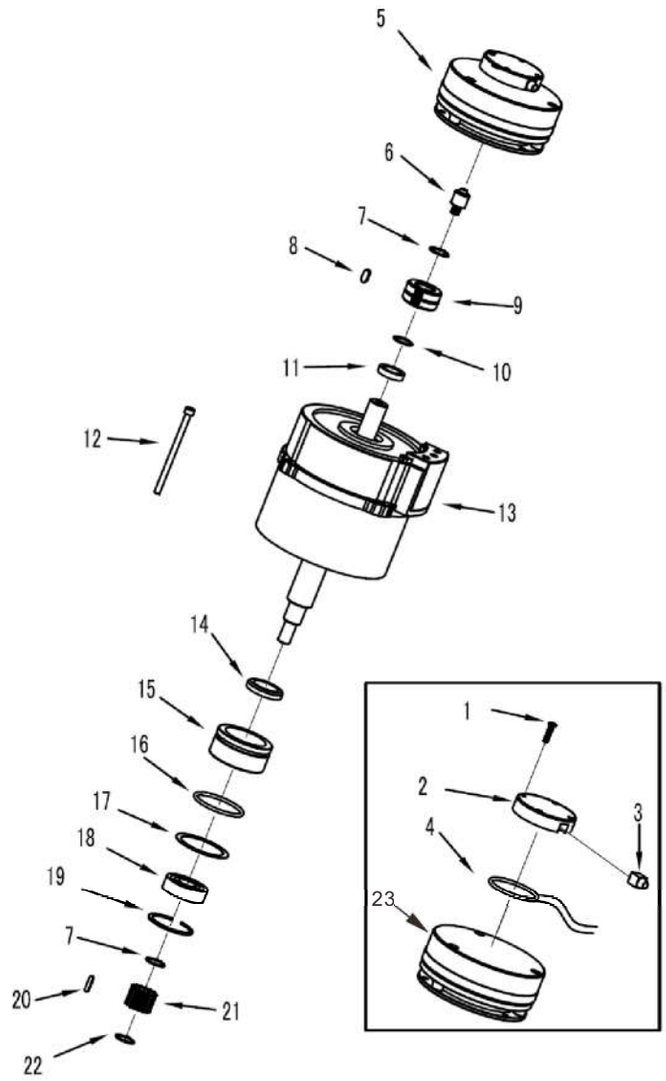


6

kupit-shtabeler.ru

## 图7/FIG.7 机架总成/FRAME

| 序号 Item No | 图号 Part No | 零部件名称 Description | 件数 Q'ty | 备注 Remark |
|---|---|---|---|---|
| 01 | 1800713001 | Shaft 轴 | 1 | |
| 02 | 4000939001 | Copper nut 螺母 | 1 | |
| 03 | 5200731001 | Screw 螺钉 | 1 | |
| 04 | 1800720001 | Bearing 轴承 | 1 | |
| 05 | 1801202001 | Sprocket wheel 转向被动链轮 | 1 | |
| 06 | 1800720002 | Bearing 轴承 | 1 | |
| 07 | 1800701001 | Chain 链条 | 1 | |
| 08 | 5500336002 | Spring pin 弹性销 | 2 | |
| 09 | 2000542005 | Screw 螺钉 | 4 | |
| 10 | 4200711001 | Cover 销轴端盖 | 2 | |
| 11 | 1500713001 | Shaft 轴 | 2 | |
| 12 | 1800702002 | Frame 机架总成 | 1 | |
| 13 | 1800702001 | Install plate 安装板 | 1 | |
| 14 | 1800600002 | Hydraulic system 液压系统 | 1 | |
| 15 | 2001037001 | Washer 垫圈 | 6 | |
| 16 | 4000231002 | Screw 螺钉 | 2 | |
| 17 | 1801107001 | Electrical appliance 配电板总成 | 1 | |
| 18 | 2000931005 | Screw 螺钉 | 2 | |
| 19 | 1800718001 | Support plate 手柄支持轴承板 | 1 | |
| 20 | 1000407002 | Switch 限位开关 | 2 | |
| 21 | 1000435003 | Washer 垫圈 | 2 | |
| 22 | 2000537003 | Washer 垫圈 | 4 | |
| 23 | 1000441007 | Screw 螺钉 | 4 | |
| 24 | 1800302001 | Junction plate 驱动连接板 | 1 | |
| 25 | 1800738001 | Screw 螺钉 | 1 | |
| 26 | 1000131001 | Screw 螺钉 | 2 | |
| 27 | 0301031001 | Screw 螺钉 | 2 | |

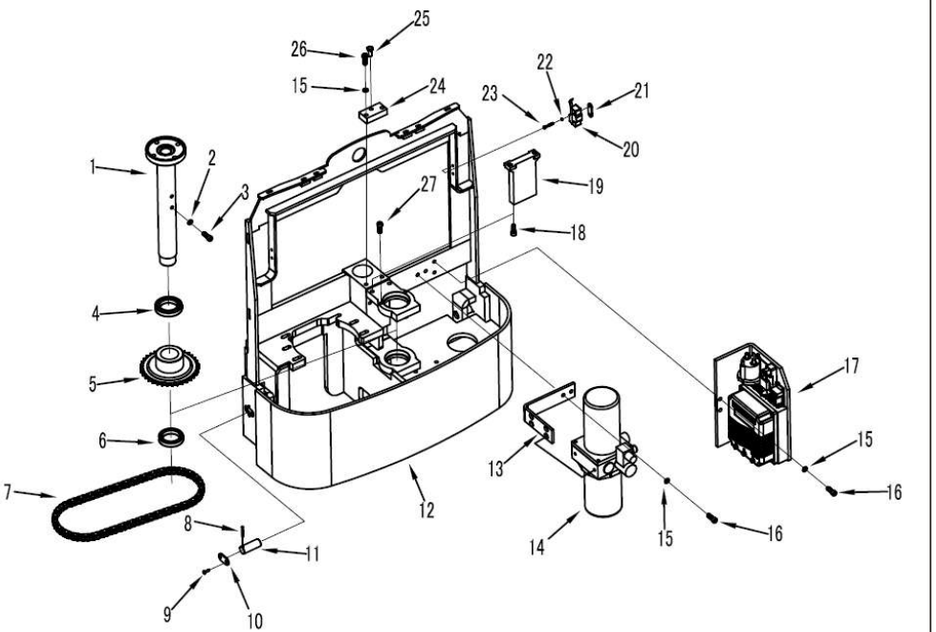

kupit-shtabeler.ru

## 图8/FIG.8 万向轮/BALANCE WHEEL ASSEMBLY

| 序号 Item No | 图号 Part No | 零部件名称 Description | 件数 Q'ty | 备注 Remark |
|---|---|---|---|---|
| 01 | 7300300001 | Balance wheel assembly 万向轮总成 | 1 | |
| | 7300300002 | Balance wheel assembly(new) 新款万向轮总成 | 1 | |
| 02 | 7300330001 | Screw M12 M12螺钉 | 1 | |
| | 7300332001 | Screw(new) M14 M14新款螺钉 | 1 | |
| 03 | 2000305001 | Dust ring 防尘圈 | 2 | |
| 04 | 2300312001 | Bush 挡套 | 2 | |
| 05 | 1000320002 | Bearing 轴承 | 2 | |
| 06 | 2700332001 | Balance wheel 万向轮 | 1 | |
| | 2700332003 | Balance wheel(new) 新款万向轮 | 1 | |
| 07 | 4000312002 | Wheel sleeve 轴套 | 1 | |
| 08 | 1000339001 | Nut M12 M12螺母 | 1 | |
| | 1800339002 | Nut(new) M14 M14新款螺母 | 1 | |
| 09 | 7301218001 | Wheel bracket 支架 | 1 | |
| | 7301218002 | Wheel bracket(new) 新款支架 | 1 | |
| 10 | 7300305001 | Pressurize circle 油封 | 1 | |
| 11 | 1001031003 | Screw 螺栓 | 6 | |
| 12 | 7300218001 | Wheel sleeve 轮架 | 1 | |
| 13 | 7300712002 | Mat 垫圈 | 1 | |
| 14 | 4300327001 | Mat 止动垫 | 1 | |
| 15 | 4300304001 | Nut 螺母 | 1 | |

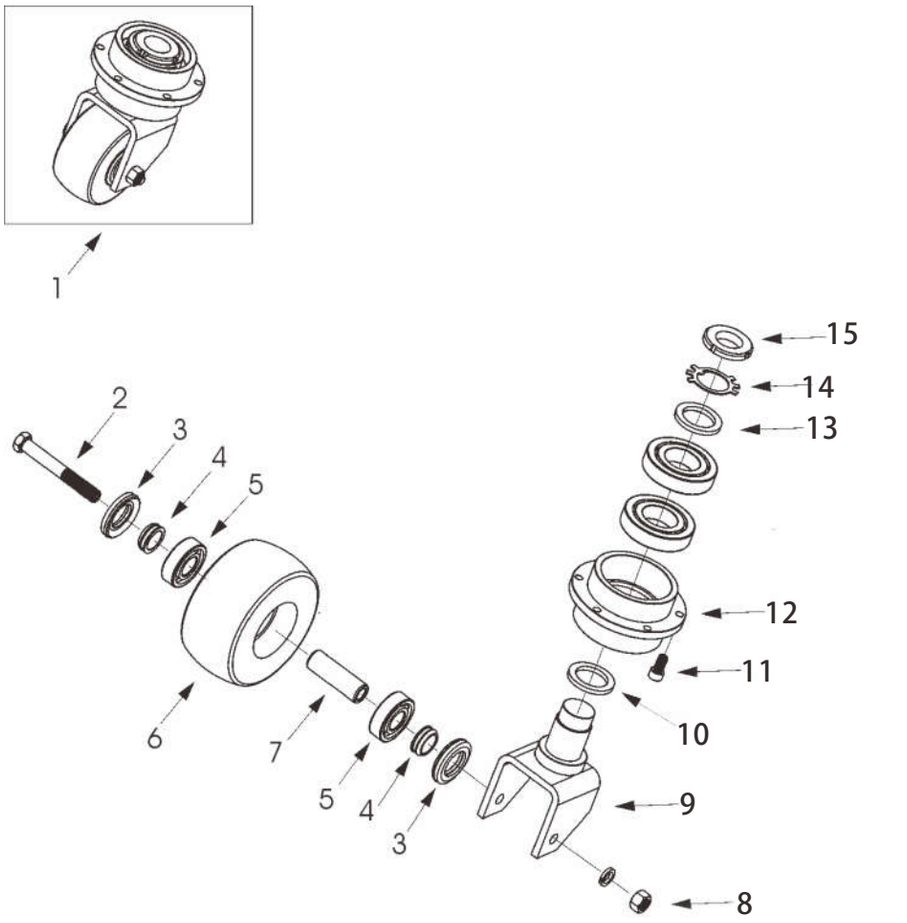


8

kupit-shtabeler.ru

## 图9/FIG.9 液压系统/HYDRAULIC SYSTEM

| 序号 Item No | 图号 Part No | 零部件名称 Description | 件数 Q'ty | 备注 Remark |
|---|---|---|---|---|
| 01 | 1800600002 | Hydraulic assembly 液压站总成 | 1 | |
| 02 | 2000637004 | Spacer 紫铜垫圈 | 2 | |
| 03 | 6500610001 | Joint 泵站出油接头 | 1 | |
| 04 | 2000603016 | Joint 直接螺钉接头 | 1 | |
| 05 | 1800614001 | Soft oil pipe 软油管 | 1 | |
| 06 | 2000603010 | Spacer 紫铜垫圈 | 1 | |
| 07 | 2300614001 | Joint 油通接头 | 1 | |
| 08 | 4700612001 | Support ring 支撑环 | 2 | |
| 09 | 2800605001 | Seal 密封圈 | 1 | |
| 10 | 4700613001 | Piston rod 活塞杆 | 1 | |
| 11 | 2800605002 | Dust ring 防尘圈 | 1 | |
| 12 | 4700611001 | Joint 活塞杆接头 | 1 | |

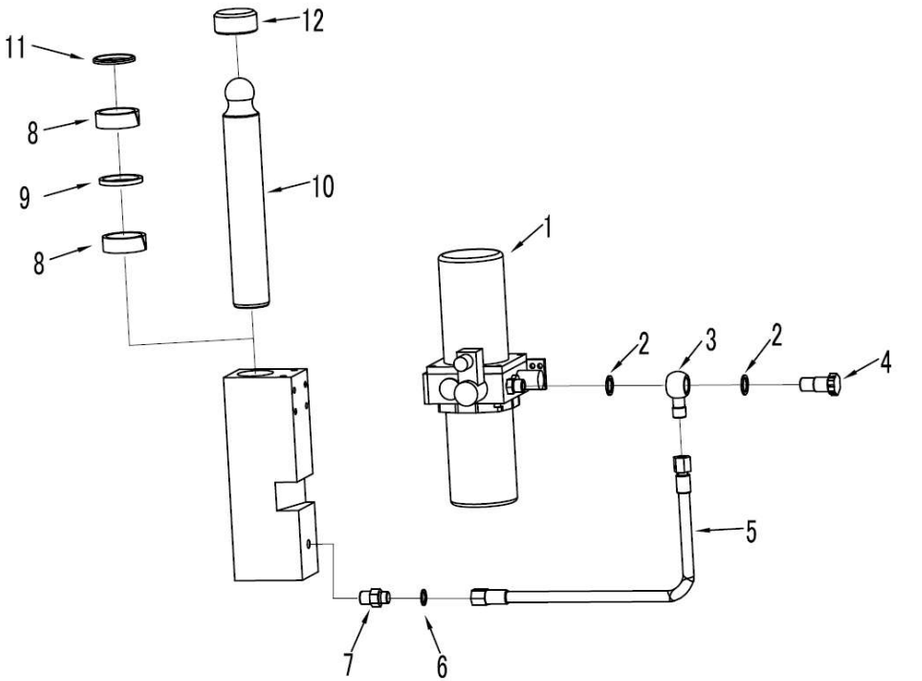


9

kupit-shtabeler.ru

## 图10/FIG.10 液压动力单元/HYDRAULIC POWER UNIT

| 序号 Item No | 图号 Part No | 零部件名称 Description | 件数 Q'ty | 备注 Remark |
|---|---|---|---|---|
| 01 | 2401400001 | Hydraulic motor 电机 | 1 | |
| 02 | 1000131003 | Screw 内六角螺丝 | 4 | |
| 03 | 4700603003 | Joint sleeve 电机齿轮泵连轴套 | 1 | |
| 04 | 1800603001 | Valve 阀 | 1 | |
| 05 | 1800628001 | O-ring 0型圈 | 1 | |
| 06 | 4900635001 | Tank clamp ring 油箱夹圈 | 2 | |
| 07 | 2000931001 | Screw 螺钉 | 1 | |
| 08 | 4900603001 | Oil tank 油箱 | 1 | |
| 09 | 2000628010 | O-ring 0型圈 | 1 | |
| 10 | 1800639001 | Nut 螺母 | 1 | |
| 11 | 4900614001 | Joint 接管 | 1 | |
| 12 | 1000605005 | Plug 陶瓷透气塞 | 1 | |
| 13 | 1000605006 | Cover 油管盖 | 1 | |
| 14 | 1800600002 | Hydraulic power unit 液压动力单元 | 1 | |

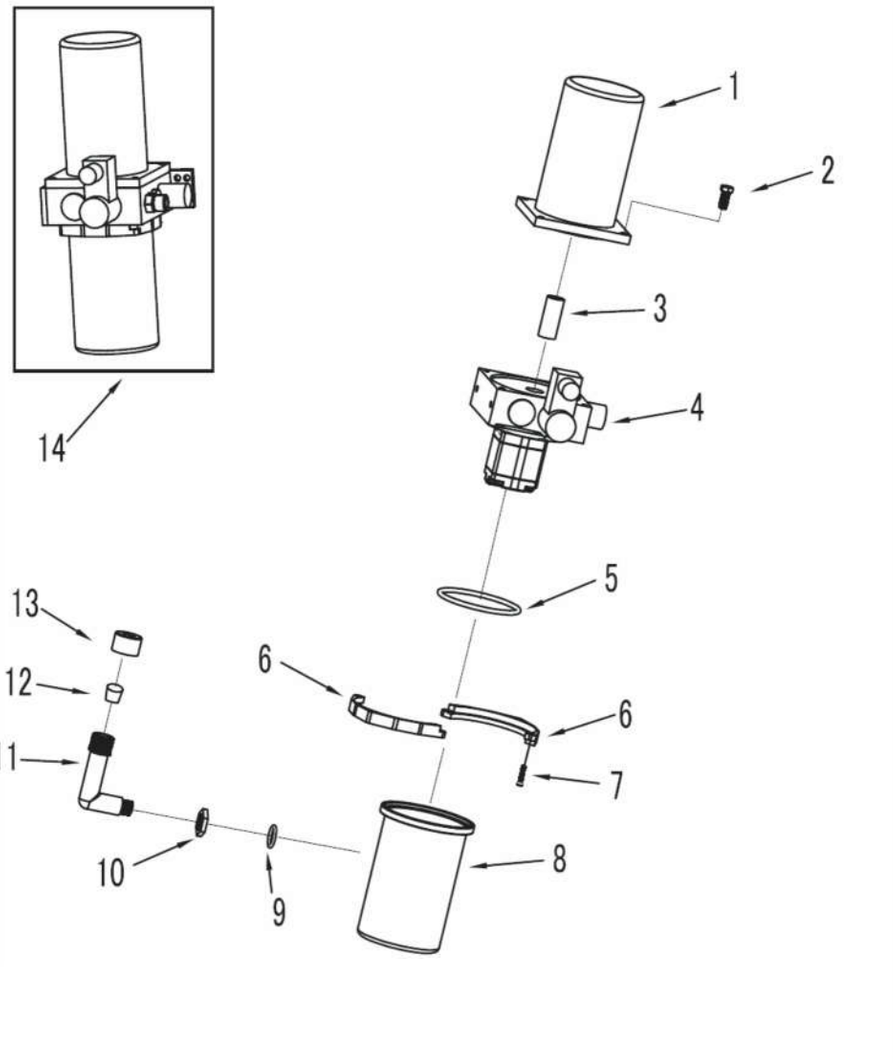


10

kupit-shtabeler.ru

## 图11/FIG.11 车身系统/FRAME

| 序号 Item No | 图号 Part No | 零部件名称 Description | 件数 Q'ty | 备注 Remark |
|---|---|---|---|---|
| 01 | 1801320001 | Bearing 自润滑轴承 | 4 | |
| 02 | 4901335001 | Wheel fork 轮架 | 2 | |
| 03 | 2001427001 | Snap ring 弹性挡圈 | 1 | |
| 04 | 4901313001 | Shaft 转轴（二） | 2 | |
| 05 | 4901314001 | Wheel 滚轮 | 2 | |
| 06 | 4000812002 | Bearing 自润滑轴承 | 4 | |
| 07 | 4901337001 | Washer 垫片 | 4 | |
| 08 | 4901313002 | Shaft 转轴（一） | 2 | |
| 09 | 1000536001 | Spring pin 销 | 2 | |
| 10 | 1801322001 | Rod body 连杆体 | 2 | |
| 11 | 5500336001 | Spring pin 销 | 2 | |
| 12 | 4000812003 | Bush 复合衬套 | 2 | |
| 13 | 4000812001 | Bearing 自润滑轴承 | 4 | |
| 14 | 2000542002 | Screw 螺钉 | 4 | |
| 15 | 4201311001 | Cover 托臂轴盖板 | 2 | |
| 16 | 4701313001 | Shaft 长轴 | 1 | |
| 17 | 1801323001 | Link 托臂 | 1 | |
| 18 | 1800702003 | Shovel fork 铲叉架 | 1 | |

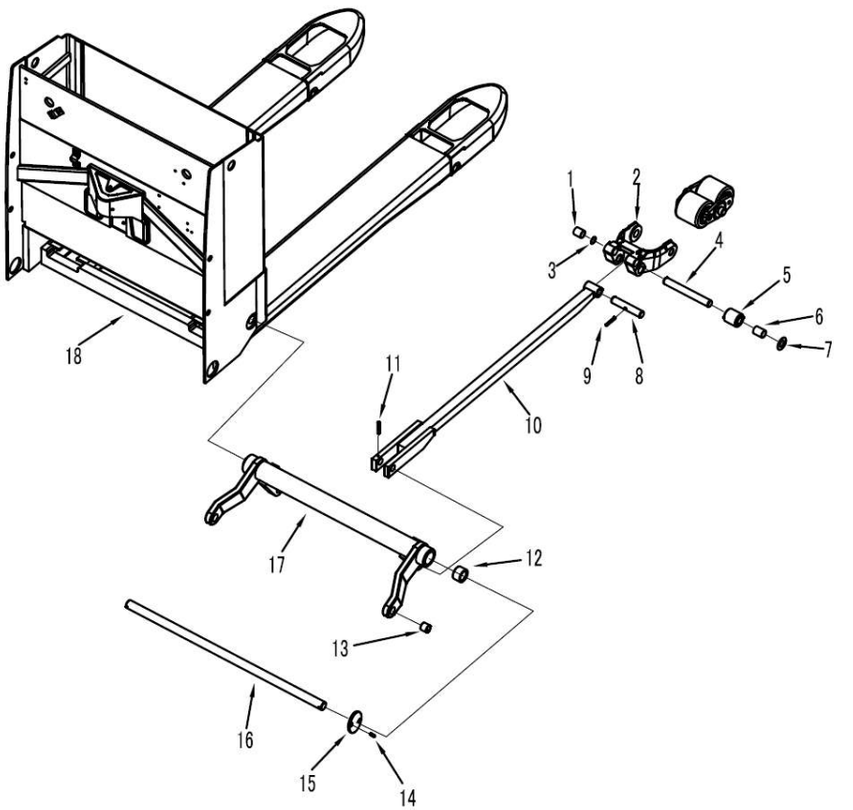


11

kupit-shtabeler.ru

## 图12/FIG.12 外壳/COMPARTMENT

| 序号 Item No | 图 号 Part No | 零部件名称 Description | 件数 Q'ty | 备 注 Remark |
|---|---|---|---|---|
| 01 | 1800909004 | Veil 电瓶面罩（铁） | 1 | |
| 02 | 1800909002 | Veil 中间面罩（铝） | 1 | |
| 03 | 1000407017 | Emergency stop button 紧急制动开关 | 1 | |
| 04 | 2001116002 | Battery indicator 电量表 | 1 | |
| 05 | 1801116001 | Key 钥匙开关 | 1 | |
| 06 | 1800909003 | Veil 主外壳（铁） | 1 | |

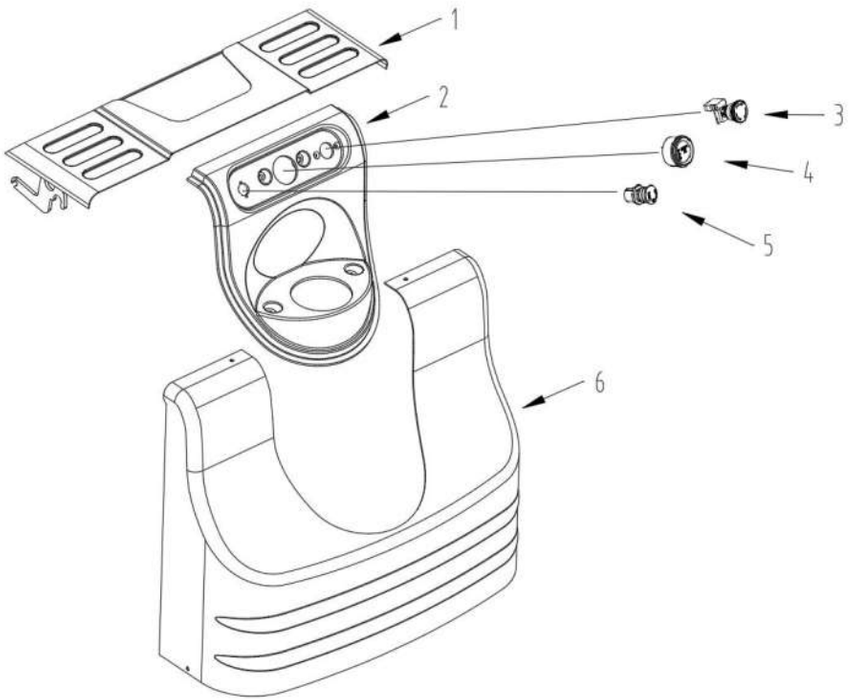

kupit-shtabeler.ru

## 图13/FIG.13 配电板总成/ELECTRICAL APPLIANCE ASSEMBLY

| 序号 Item No | 图号 Part No | 零部件名称 Description | 件数 Q'ty | 备注 Remark |
|---|---|---|---|---|
| 01 | 6000131001 | Screw 螺钉 | 2 | |
| 02 | 1001437003 | Washer 垫圈 | 6 | |
| 03 | 0301031001 | Screw 螺钉 | 2 | |
| 04 | 1801106001 | Contactor 接触器 | 1 | |
| 05 | 1000407015 | Fuse 保险丝 | 1 | |
| 06 | 1000407016 | Fuse seat 保险丝座 | 1 | |
| 07 | 2001437005 | Washer 垫圈 | 2 | |
| 08 | 1801138001 | Screw 螺钉 | 2 | |
| 09 | 4300900002 | Screw 螺钉 | 4 | |
| 10 | 1801102001 | Install plate 安装板 | 1 | |
| 11 | 4601102001 | Radiator 散热架 | 1 | |
| 12 | 7800400002 | 1230 Controller 1230控制器 | 1 | |
| 13 | 4000831001 | Screw 螺钉 | 2 | |
| 14 | 1801107001 | Electrical appliance assembly 配电板总成 | 1 | |
| 15 | 6000418004 | Install plate 安装板 | 1 | |
| 16 | 1000441005 | Screw 螺钉 | 2 | |
| 17 | 1800306001 | Contactor 接触器 | 1 | |
| 18 | 2001141001 | Screw 螺钉 | 4 | |
| 19 | 4601200001 | Circuit board 电路板 | 1 | |

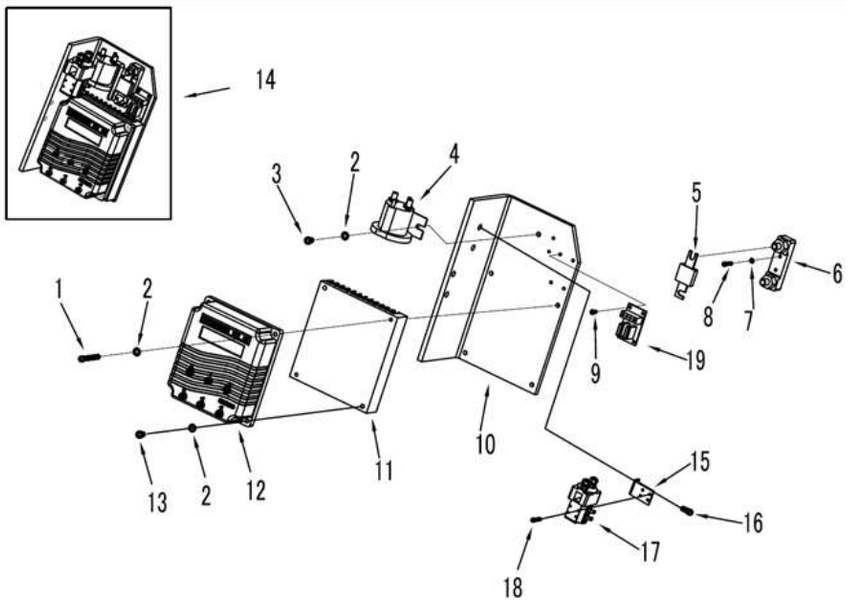

## 图14/FIG.14 萨牌配电板总成/ZAPI ELECTRIC PANEL ASSEMBLY

| 序号 Item No | 图号 Part No | 零部件名称 Description | 件数 Q'ty | 备注 Remark |
|---|---|---|---|---|
| 01 | 1800400001 | ZAPI electric panel assembly(No contactor) 萨牌配电板总成（不带接触器） | 1 | |
| | 1800400002 | ZAPI electric panel assembly(Contactor) 萨牌配电板总成（带接触器） | 1 | Match 选配 |
| 02 | 1800418001 | Install plate 安装板 | 1 | |
| 03 | 6000418004 | Install plate 安装板 | 1 | Match 选配 |
| 04 | 07G0431001 | Screw 螺钉 | 4 | Match 选配 |
| 05 | 6000731001 | Screw 螺钉 | 4 | |
| 06 | 1800306001 | Contactor 接触器 | 1 | Match 选配 |
| 07 | 9500411001 | Radiator 散热架 | 1 | |
| 08 | 9500407001 | ZAPI Controller 萨牌控制器 | 1 | |
| 09 | 4600431001 | Screw 螺钉 | 4 | |
| 10 | 4000412001 | Spacer bush 隔套 | 4 | |
| 11 | 4601200001 | Circuit board 线路板 | 1 | |
| 12 | 1001141001 | Screw 螺钉 | 6 | |
| 13 | 1000406006 | Fuse 保险丝 | 2 | |
| 14 | 2000407010 | Fuse 保险丝 | 1 | |
| 15 | 1000407016 | Fuse seat 保险丝座 | 1 | |
| 16 | 1801106001 | Contactor 接触器 | 1 | |

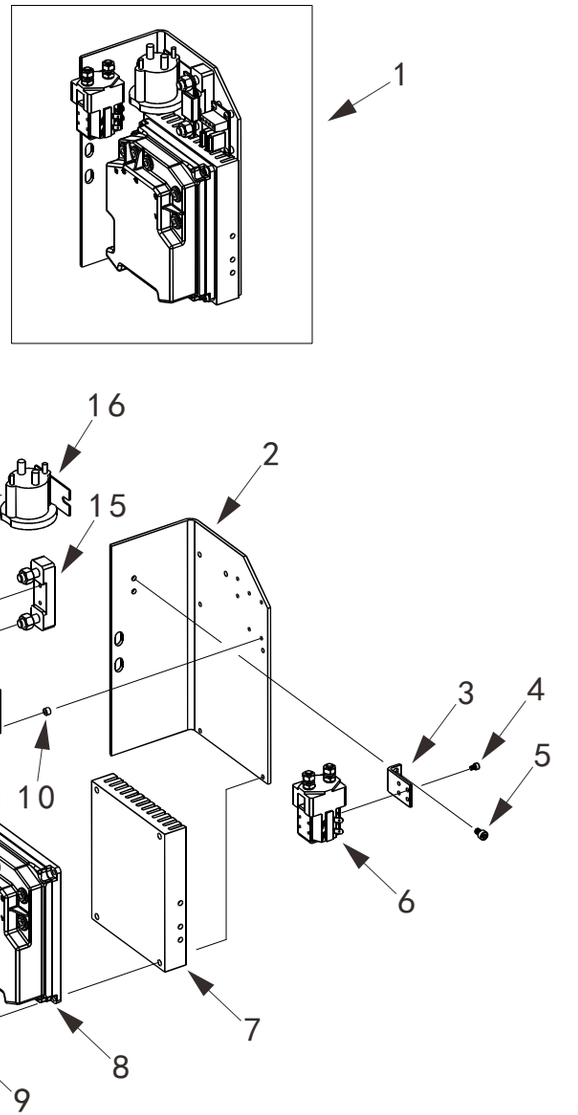


14

kupit-shtabeler.ru

## 图15/FIG.15 单轮总成/SINGLE WHEEL ASSEMBLY

| 序号 Item No | 图号 Part No | 零部件名称 Description | 件数 Q'ty | 备注 Remark |
|---|---|---|---|---|
| 01 | 4900332003 | Single wheel 单轮 | 1 | |
| 02 | 1000225002 | Screw 锥端紧定螺钉 | 1 | |
| 03 | 4900313001 | Shaft 轴 | 1 | |
| 04 | 1000320002 | Bearing 轴承 | 2 | |
| 05 | 2000305001 | Dust ring 防尘圈 | 2 | |
| 06 | 2000312001 | Bush 挡圈 | 2 | |

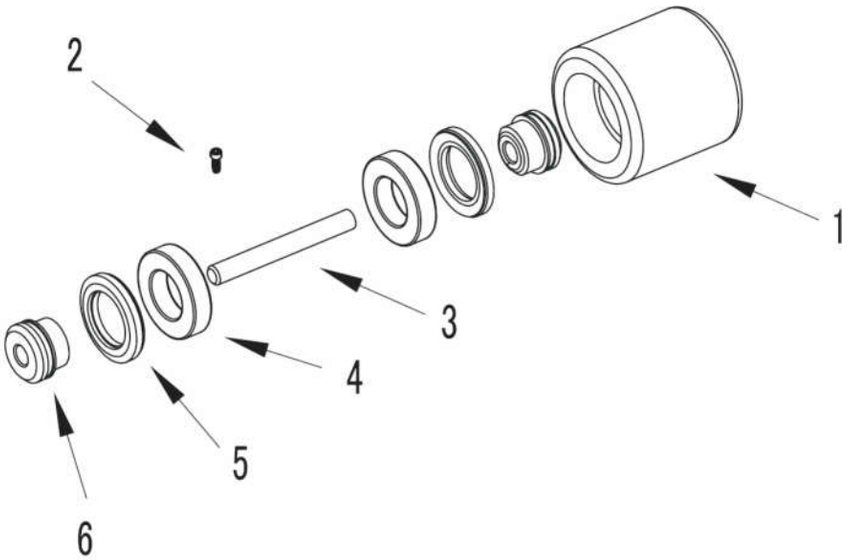


15

kupit-shtabeler.ru

## 图16/FIG.16 双轮总成/DOUBLE WHEEL ASSEMBLY

| 序号 Item No | 图号 Part No | 零部件名称 Description | 件数 Q'ty | 备注 Remark |
|---|---|---|---|---|
| 01 | 1800328001 | O-ring 0型圈 | 8 | |
| 02 | 4900314001 | Bush 轮子隔套 | 4 | |
| 03 | 2500620001 | Bearing 轴承 | 8 | |
| 04 | 4900334001 | Dust ring 橡胶防尘圈 | 8 | |
| 05 | 4900314002 | Sleeve 轮子轴套 | 8 | |
| 06 | 4900332001 | Loading wheel 前双轮 | 4 | |
| 07 | 4900335001 | Plate 轮架夹板 | 4 | |
| 08 | 4900332002 | Washer 隔圈 | 4 | |
| 09 | 1800320004 | Bearing 自润滑轴承 | 4 | |
| 10 | 4900325001 | Screw 螺钉 | 4 | |

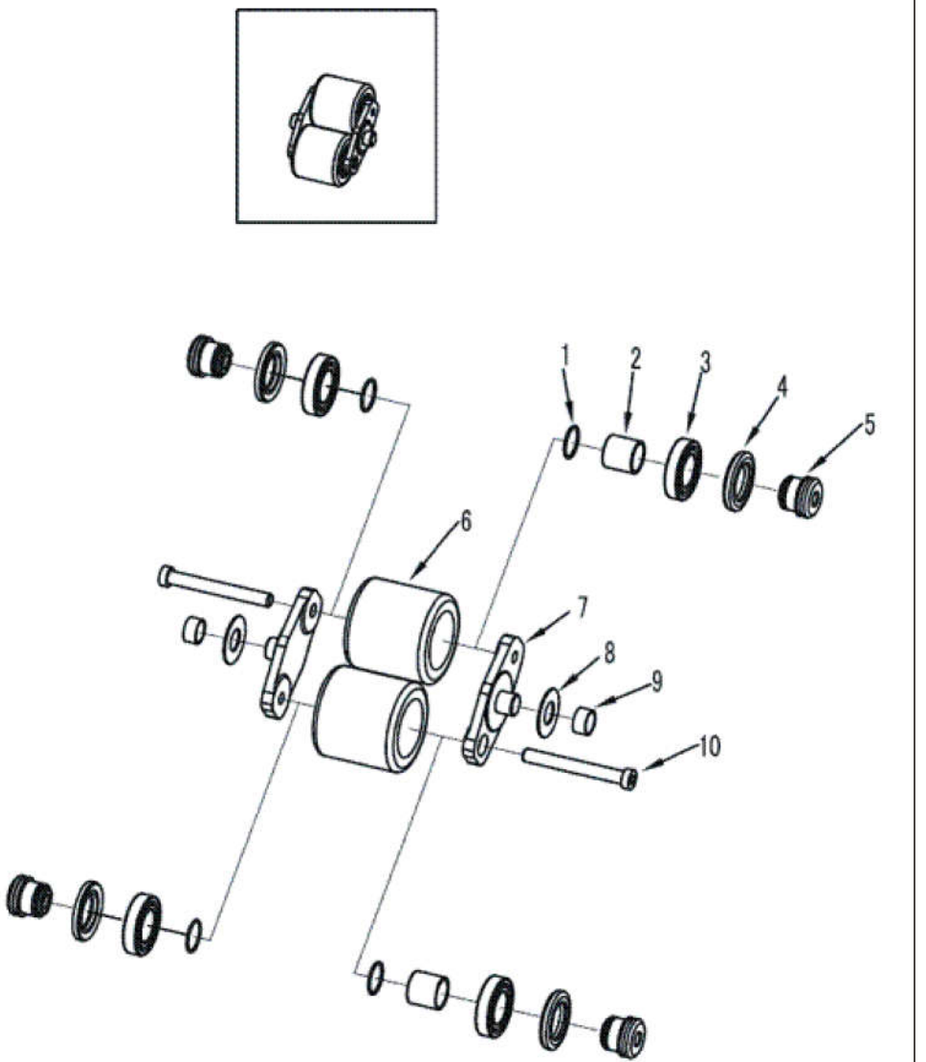


16

kupit-shtabeler.ru

## 图17/FIG.17 电池组件/BATTERY ASSEMBLY

| 序号 Item No | 图号 Part No | 零部件名称 Description | 件数 Q'ty | 备注 Remark |
|---|---|---|---|---|
| 01 | 2001100021 | Charger (220V Europe criterion) 欧标充电器 | 1 | |
| | 2001100022 | Charger (220V USA criterion) 美标充电器 | | |
| | 2001100023 | Charger (220V Australia criterion) 澳标充电器 | | |
| | 2001100024 | Charger (220V Eng criterion) 英标充电器 | | |
| | 2001100026 | Charger (110V USA criterion) 美标充电器 | | |
| | 2001100027 | Charger (110V Australia criterion) 澳标充电器 | | |
| | 2001100028 | Charger (110V Eng criterion) 英标充电器 | | |
| | 2001100029 | Charger (110V Europe criterion) 欧标充电器 | | |
| 02 | 1801100001 | Flying rings 充电线 | 1 | |
| 03 | 1001100003 | Battery(210Ah) 电瓶 | 1 | |
| 04 | 2000830001 | Screw 螺钉 | 2 | |
| 05 | 2000937002 | Washer 垫圈 | 2 | |
| | 2000937003 | Spring washer 弹簧垫圈 | 2 | |
| 06 | 1000239002 | Nut 螺母 | 2 | |
| 07 | 4601108001 | Cover 电线座盖 | 1 | |

