kupit-shtabeler.ru

CBD20J-B-S
Перечень запасных частей

Копия для чтения по исходному DOC. Редакция источника: 20200602 V01.

Таблицы и заводские рисунки перевёрстаны, чтобы они не перекрывали друг друга. Это не исходный заводской PDF. Для сверки сохраняется оригинальный файл OL19-1_CBD20J-B-S Part list.doc.

В исходнике есть конфликт титульных обозначений: английское CBD20J-B-S и старый китайский заголовок CBD15J-Li. Он не подтверждает совместимость моделей.

Номера, наименования, примечания и пустые ячейки сохранены по проверенным таблицам. Подбор детали требует сверки исполнения машины.

kupit-shtabeler.ru

Графические элементы титула исходника

HELI

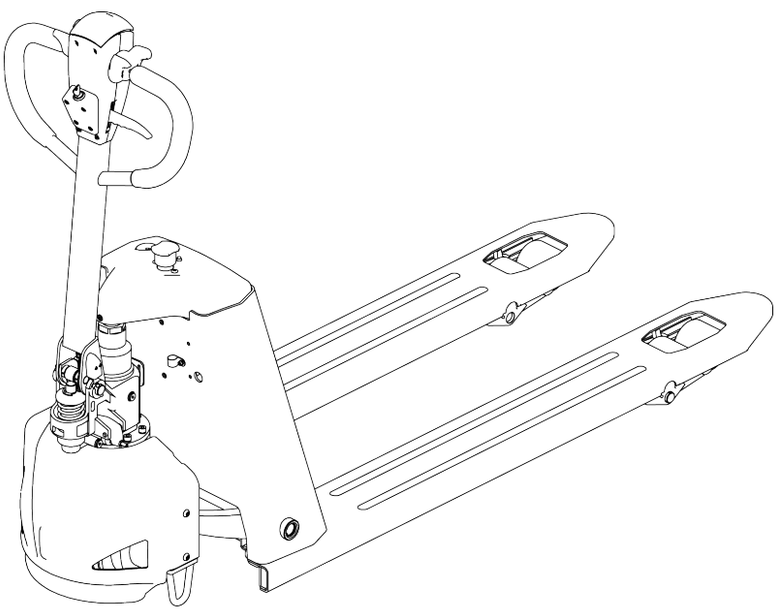

kupit-shtabeler.ru

1.1 The frame assembly

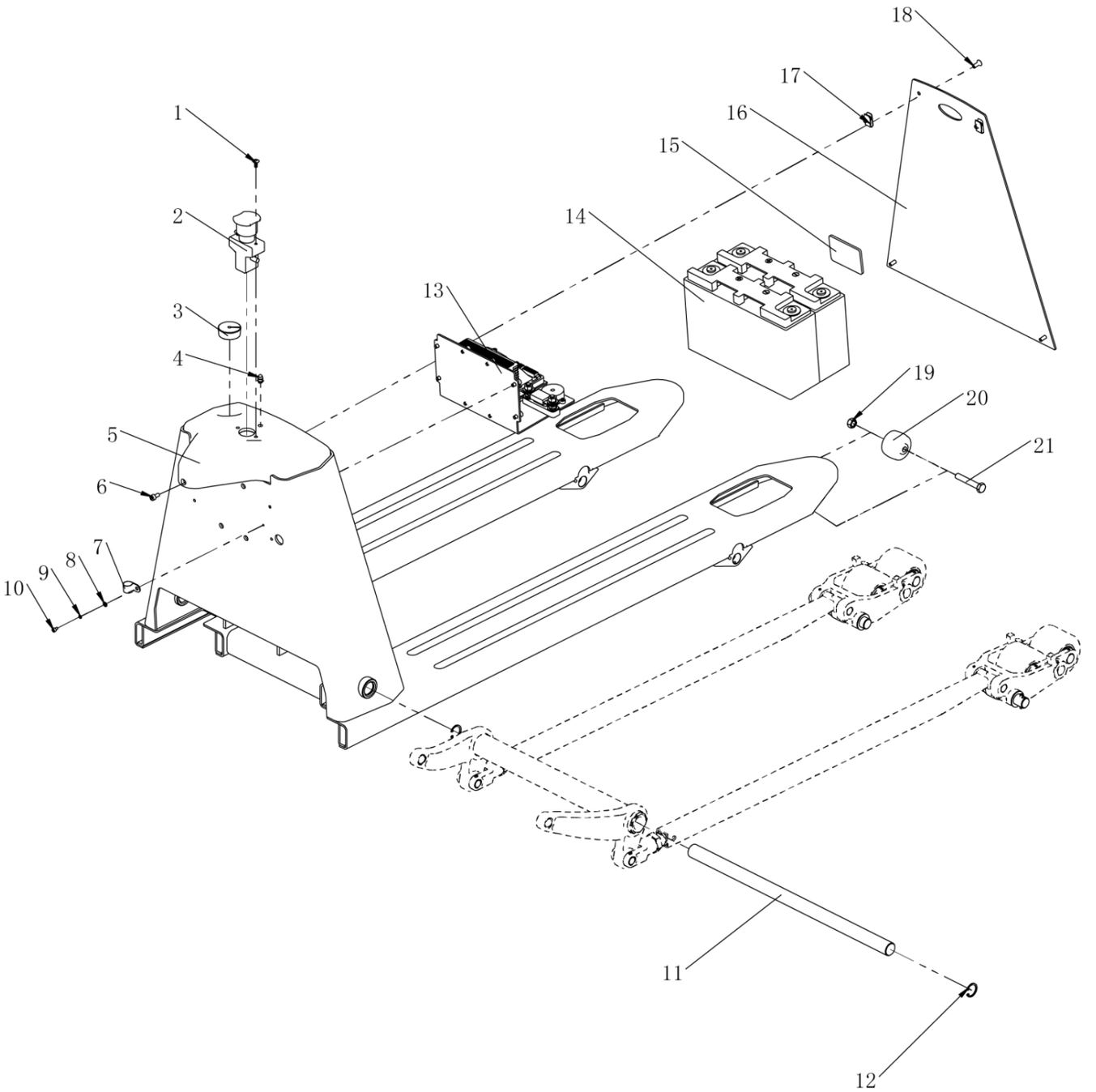

kupit-shtabeler.ru

1.1 The frame assembly — Parts list

NO.	Code	Name	Specification	Qty.	Remark
1	03.0632	Cross screw with large flat head	M5×12	2	GB 973-1976
2	02.01.298	Emergency stop switch	ED80 / 24V	1	
3	02.01.312415	Charger socket		1	
4	22.19.03832	Diode lamp holder	5mm	1	
5	33.036.0001	Frame welded (550 Type)		1	standard
	33.036.0002	Frame welded (685 Type)			apolegamic
	33.036.0008	Frame welded (550 Type) low 75mm			apolegamic
	33.036.0009	Frame welded (685 Type) low 75mm			apolegamic
6	03.0145	hexagon socket cap screws	M6×12	1	GB/T 70.1-2000
7	21.03.04617	R hoop (with rubber)	Φ16	1	
8	03.0054	flat washer	Φ4	1	GB/T 95-2002
9	03.0008	spring washer	Φ4	1	GB/T 93-1987
10	03.0127	hexagon socket cap screws	M4×6	1	GB/T 70.1-2000
11	30.38.0019	back shaft (550 Type)		1	standard
	30.38.0021	back shaft (685 Type)			apolegamic
12	03.0024	circlip for hole	Φ25	2	GB 893.1-86
13	81.021.0001	Electrical components		1	
14	02.XDC.2214	SM15 battery (TN)	24V/32Ah	1	
15	30.09.0005	rubber blanket		1	
16	30.38.0003	Battery baffle (550 Type)		1	standard
	30.38.0020	Battery baffle (685 Type)			apolegamic
	30.38.0052	Battery baffle (550 Type) low 75mm			apolegamic
	30.38.0051	Battery baffle (685 Type) low 75mm			apolegamic
17	03.0587	Spring snap nut	M6	2	
18	03.0089	Hexagon socket countersunk head screw	M6×16	4	GB/T 70.3-2000
19	02.0243	hexagon lock nut	M10	2	apolegamic
20	30.28.0137	running pulley		2	apolegamic
	30.28.0153	running pulley (low 75mm)			
21	03.03820	Hexagon head bolt full thread	M10×60	2	apolegamic

kupit-shtabeler.ru

1.2 Connecting rod rocker arm subassembly

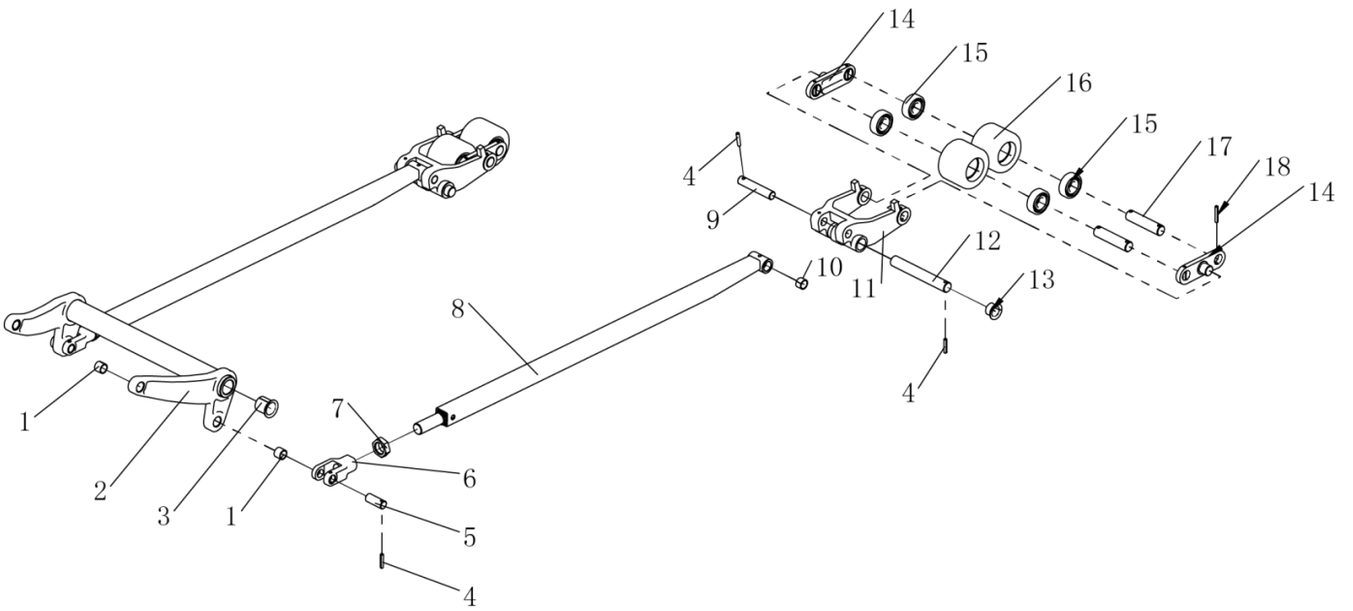

kupit-shtabeler.ru

1.2 Connecting rod rocker arm subassembly — Parts list

NO.	Code	Name	Specification	Qty.	Remark
1	03.0691	Composite sleeve	Φ16×Φ19×15	4	
2	33.036.0005	Circle rods welded (550 Type)		1	standard
	33.015.0003	Circle rods welded (685 Type)			apolegamic
	33.036.0010	Circle rods welded (550 Type) low 75mm			apolegamic
	33.036.0011	Circle rods welded (685 Type) low 75mm			apolegamic
3	03.04422	Composite sleeve with shoulder	Φ35×Φ28×Φ25×27	2	
4	03.0305	elastic cylindrical pin	Φ5×30	6	GB/T879.2-2000
5	30.01.6569	Small axle		2	
6	30.01.6601	The push-rod bracket		2	
7	03.0943	Thin hexagonal nut with fine teeth	M22×1.5	2	GB/T6173-2000
8	33.036.0007	Push rod welded		2	standard
	33.036.0012	Push rod welded (low 75mm)			apolegamic
9	30.28.0093	Push rod axle		2	
10	03.0451	composite sleeve	Φ16×Φ19×12	4	
11	30.28.0082	Wheel carrier		2	standard
	30.28.0200	Wheel carrier (low 75mm)			apolegamic
12	30.28.0164	Wheel carrier axle		2	
13	03.0453	Composite sleeve with shoulder	Φ31×Φ23×Φ20×16.5	4	
14	30.01.1290	Connecting plate		4	
15	03.90.057	Deep groove ball bearing	6204	8	GB/T276-94
16	03.LZ.0128	wheel (PU)	Φ80×60	4	standard
	03.LZ.01261	Wheel (PU) (low 75mm)	Φ70×60		apolegamic
17	30.28.0094	Bearing wheel pin shaft		4	
18	03.03030	Elastic cylindrical pin	Φ5×35	8	GB/T879.1-2000

kupit-shtabeler.ru

1.3 The cover for driving motor

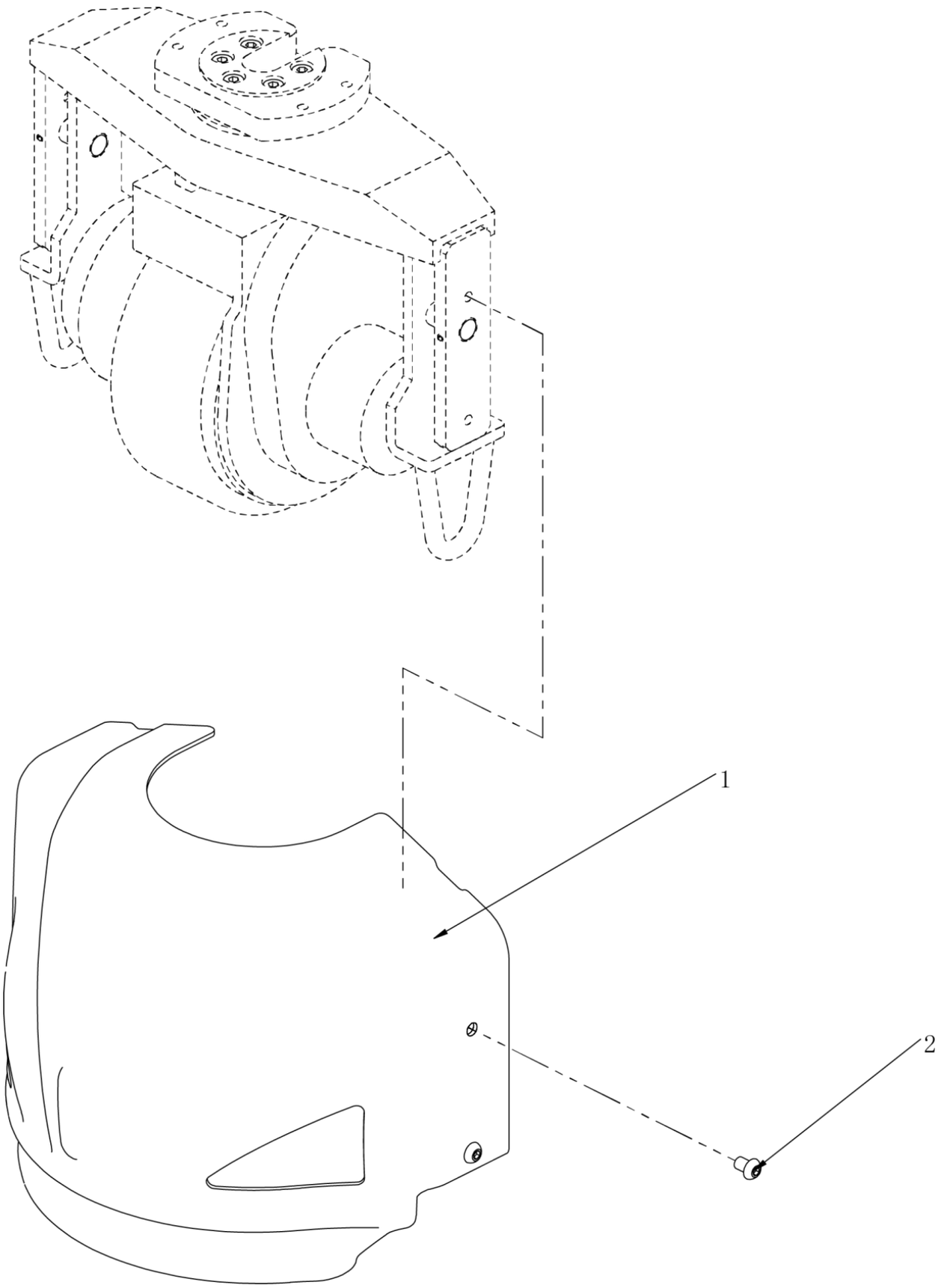

kupit-shtabeler.ru

1.3 The cover for driving motor — Parts list

NO.	Code	Name	Specification	Qty.	Remark
1	30.09.0037	Back penal		1	
2	03.01173	Hexagon socket plain round head screw	M8×12	4	GB/T 70.2-2000

kupit-shtabeler.ru

2.1 Driving Assembly

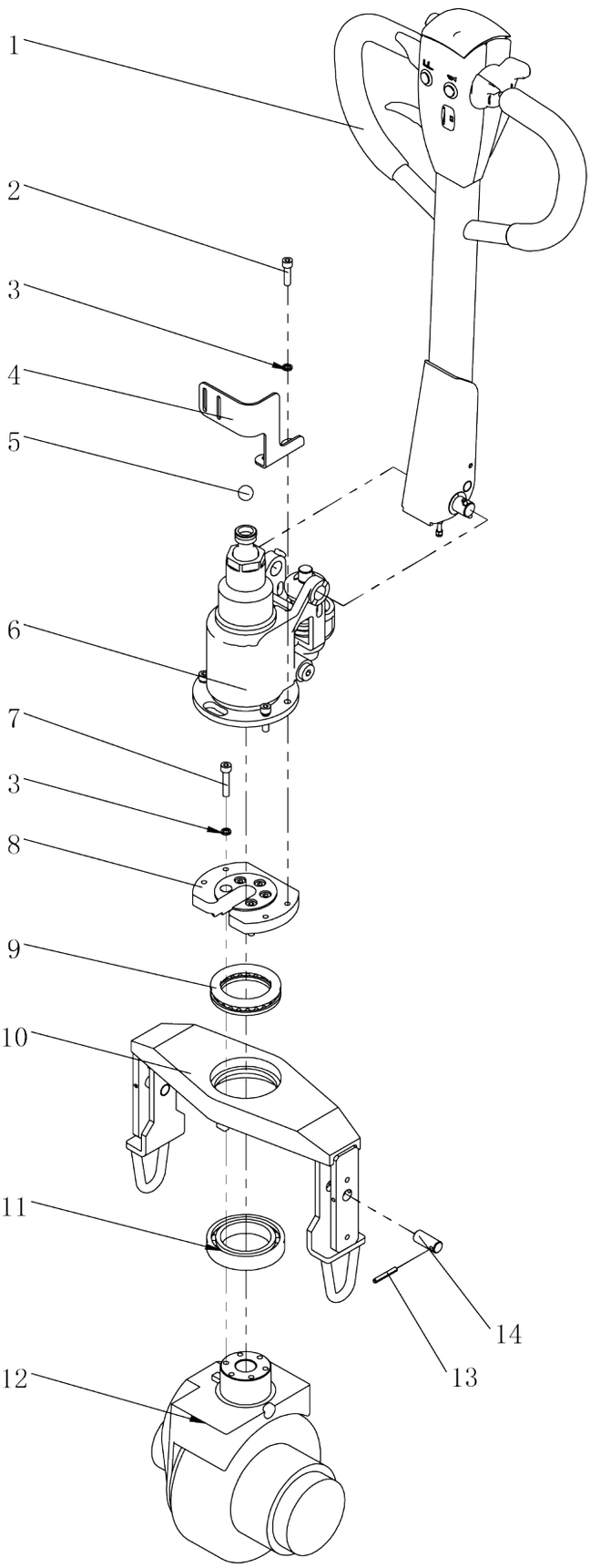

kupit-shtabeler.ru

2.1 Driving Assembly — Parts list

NO.	Code	Name	Specification	Qty.	Remark
1	81.020.0003	Handle subassembly		1	
2	30.01570	Hexagon socket cap screws	M8×30	4	GB/T 70.1-2000
3	03.0013	Spring washer	Φ8	9	GB/T 93-1987
4	30.38.0004	Wire harness mounting plate		1	
5	03.0739	Steel ball	Φ19.05	1	GB / T308-77
6	02.YG.20749	Oil cylinder subassembly		1	
7	03.0159	Hexagon socket cap screws	M8×40	5	GB/T 70.1-2000
8	30.38.0017	Driving clamp plate		1	
9	03.90.0121	Thrust ball bearing	51113	1	GB/T 301-1995
10	33.036.0003	Drive mount welded		1	
11	03.90.01211	Angular contact ball bearing	7013AC	1	GB/T 292-94
12	02.QD.00830	SM15 driving assembly	24V/0.75KW	1	
13	03.0306	Elastic cylindrical pin	Φ5×40	2	GB/T 879.1-2000
14	30.09.0069	Driving coupling shaft		2	

kupit-shtabeler.ru

2.2 Driving motor

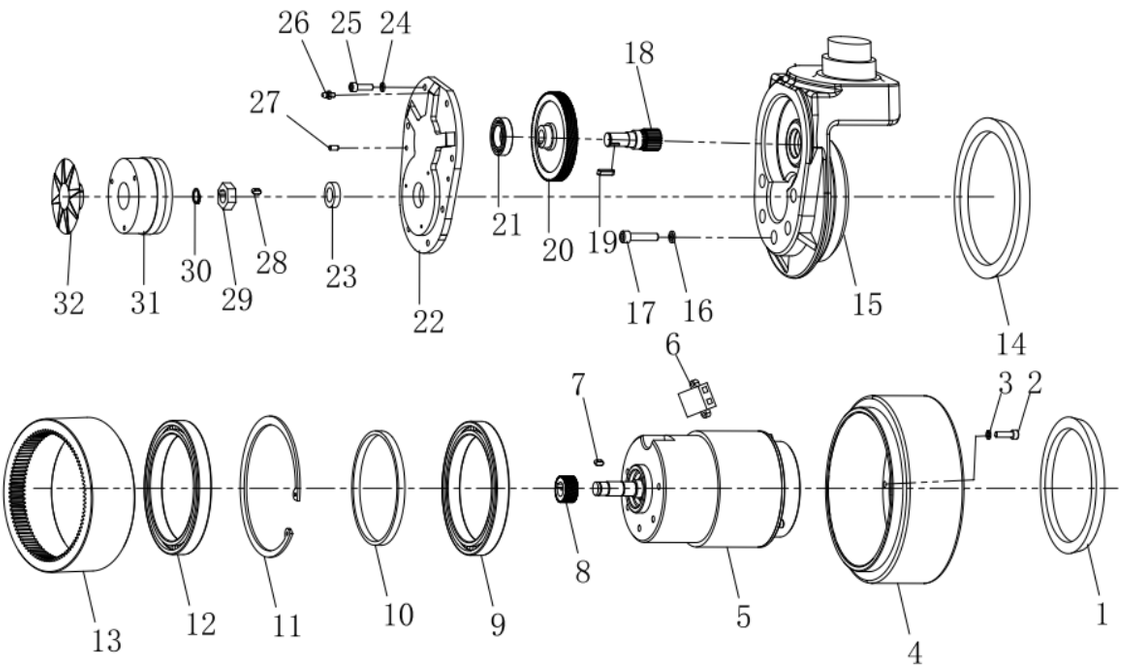

kupit-shtabeler.ru

2.2 Driving motor — Parts list

NO.	Code	Name	Specification	Qty.	Remark
1	GB/T13871-92	framework oil seal	VC 130*145-10	8	
2	03.01049	hexagon socket cap screws	M6×20	8	GB/T 70.1-2000
3	03.0011	spring washer	Φ6	8	GB/T79-1987
4	1115-220000-0B	Driving wheel suassembly		1	
5	Z130D750-24A1-26.5S	Driving assembly		1	
6	JX6-2	Junction box		1	
7	GB/T1096-2003	Key 5*5*14 blocking hammer	Keys Type A	1	
8	1115-200005-0B	bevel pinion		1	
9	GB/T276-94	antifriction bearing61824-2RS	Φ120*Φ150*16	1	
10	ZD-NL-571-001	adjusting washer	40CR	1	
11	GB/T 893.1-86	circlip for hole	Φ150	1	
12	GB/T276-94	antifriction bearing61824-2RS	Φ120*Φ150*16	1	
13	1115-200002-0B-X	Straight tooth circle	20CrMnTi	1	
14	GB/T13871-92	framework oil seal	TCΦ155*Φ172*10	1	
15	ZD-SJ-504-001	The box	QT450	1	
16	03.0013	spring washer	Φ8	5	GB/T79-1987
17	03.0158	hexagon socket cap screws	M8×35	5	GB/T 70.1-2000
18	1115-200003-0B	Small straight tooth		1	
19	GB/T1096-2003	Key 5*5*20blocking hammer	Keys Type A	1	
20	1115-200004-0B	Bi dental sclerite		1	
21	GB/T276-94	antifriction bearing	61905-ZZ	1	
22	ZD-RY-505-001	Case cover	ADC12	1	
23	GB/T13871-92	framework oil seal	TCΦ16*Φ28*7	1	
24	03.0011	spring washer	Φ6	8	GB/T79-1987
25	03.01049	hexagon socket cap screws	M6×20	8	GB/T 70.1-2000
26	JB/T7940.1-1995	Straight through pressure filling cup		1	
27	GB/T119.1-2000	Locating pin	5*15	1	
28	GB/T1096-2003	Key 5*5*8 blocking hammer	Keys Type A	1	
29	ZD-NL-571-002	Brake hex nut		1	
30	GB/T894.1-86	Circlip for shaft	Φ15	1	
31	ZD-HZDC-362-001	6N.M brake		1	
32	ZD-ZJNL-076-001	The brake plug		1	

kupit-shtabeler.ru

3.1 Handle subassembly

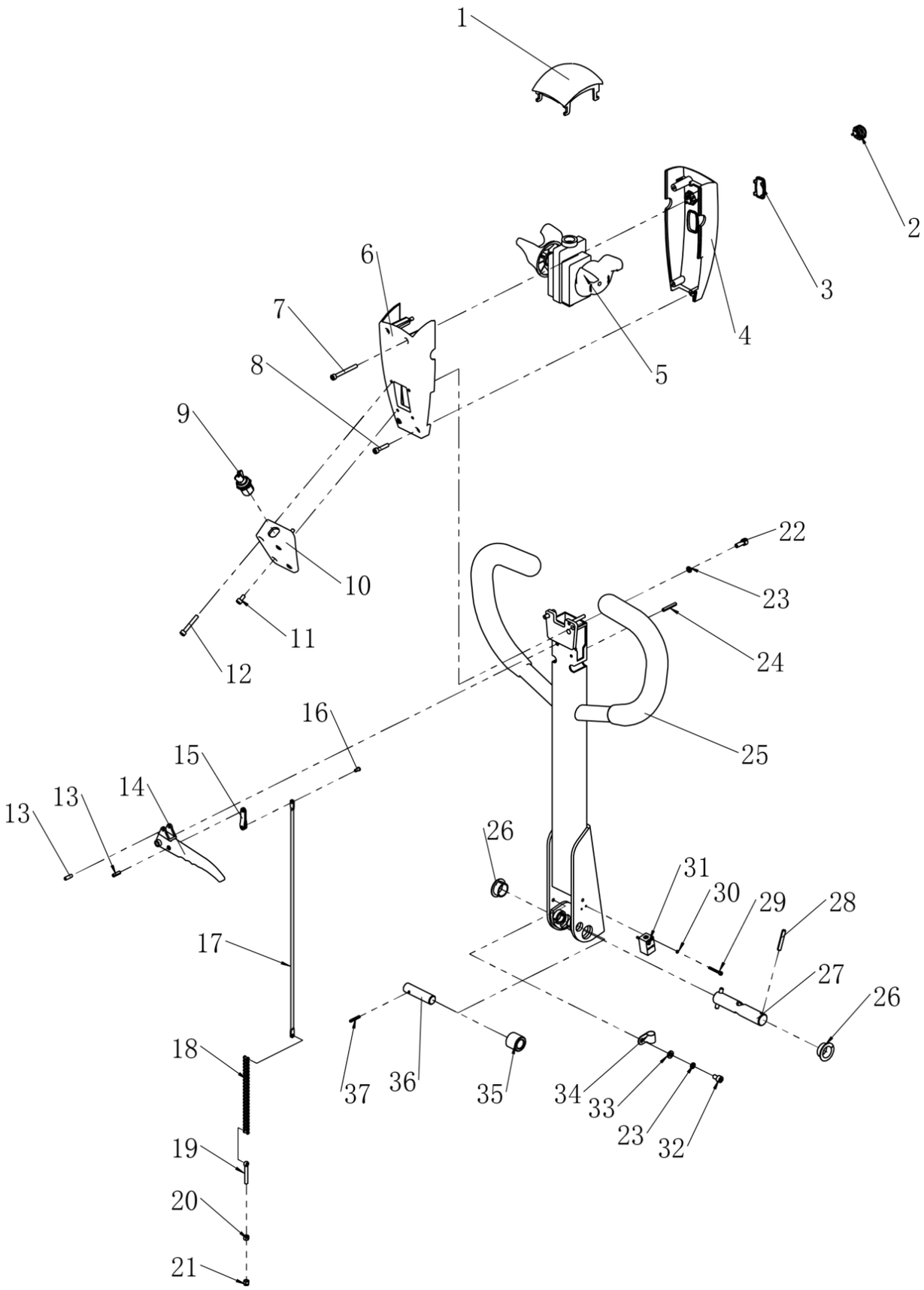

kupit-shtabeler.ru

3.1 Handle subassembly — Parts list

NO.	Code	Name	Specification	Qty.	Remark
1	16.0038	Belly switch		1	
2	16.0246	Metal push button switch	GQ19SH-10	2	
3	02.DLB.317703	Coulombmeter (SL15GL)	24V	1	
4	02.FGJ.32834	Upper canopy for handle		1	
5	02.01.2155	Accelerator (SL15GL)	24V	1	
6	02.FGJ.3416	Under canopy for handle		1	
7	03.03644	hexagon socket cap screws	M5×50	2	GB/T 70.1-2000
8	03.01410	hexagon socket cap screws	M5×25	2	GB/T 70.1-2000
9	02.01.2193	Key switch	2801	1	
10	02.FGJ.0219	Handle key box		1	
11	03.0139	hexagon socket cap screws	M5×10	2	GB/T 70.1-2000
12	03.01340	hexagon socket cap screws	M5×35	2	GB/T 70.1-2000
13	03.0312	elastic cylindrical pin	Φ4×16	2	GB/T 879.2-2000
14	30.01.3270	Handle		1	
15	30.01.3268	Connecting plate		1	
16	03.0703	Axis pin	Φ4×8	1	GB 882-88
17	30.01.3292	Pull road		1	
18	02.01.3161	T40 roller chain	08B-1 98	1	
19	30.01.3272	Bolt with hole		1	
20	03.0255	hex nut	M5	1	GB/T 41-2000
21	03.02441	hexagon lock nut	M5	1	GB/T 889.1-2000
22	03.0147	hexagon socket cap screws	M6×16	2	GB/T 70.1-2000
23	03.0011	spring washer	Φ6	3	GB/T 93-1987
24	03.03101	elastic cylindrical pin	Φ4×30	1	GB/T 879.2-2000
25	30.01.3266	Handle welled		1	
26	03.0692	composite sleeve with shoul	Φ31×Φ23×Φ20×10	2	
27	30.02.046	axis of rotation		1	
28	03.0303	elastic cylindrical pin	Φ5×35	2	GB/T 879.2-2000
29	03.01301	hexagon socket cap screws	M3×25	2	GB/T 70.1-2000
30	03.00091	spring washer	Φ3	2	GB/T 93-1987
31	19.03464	Proximity switch	TL-Q5MB1-Z	1	
32	03.0175	hexagon socket cap screws	M6×10	1	GB/T 70.1-2000
33	03.0049	flat washer	Φ6	1	GB/T 95-2002
34	03.0601	R hoop (with rubber)	Φ12	1	
35	30.02.047	axial compression		1	
36	30.01.3293	Press roller		1	
37	03.0702	elastic cylindrical pin	Φ3×22	1	GB/T 879.1-2000

kupit-shtabeler.ru

4.1 Oil cylinder Assembly

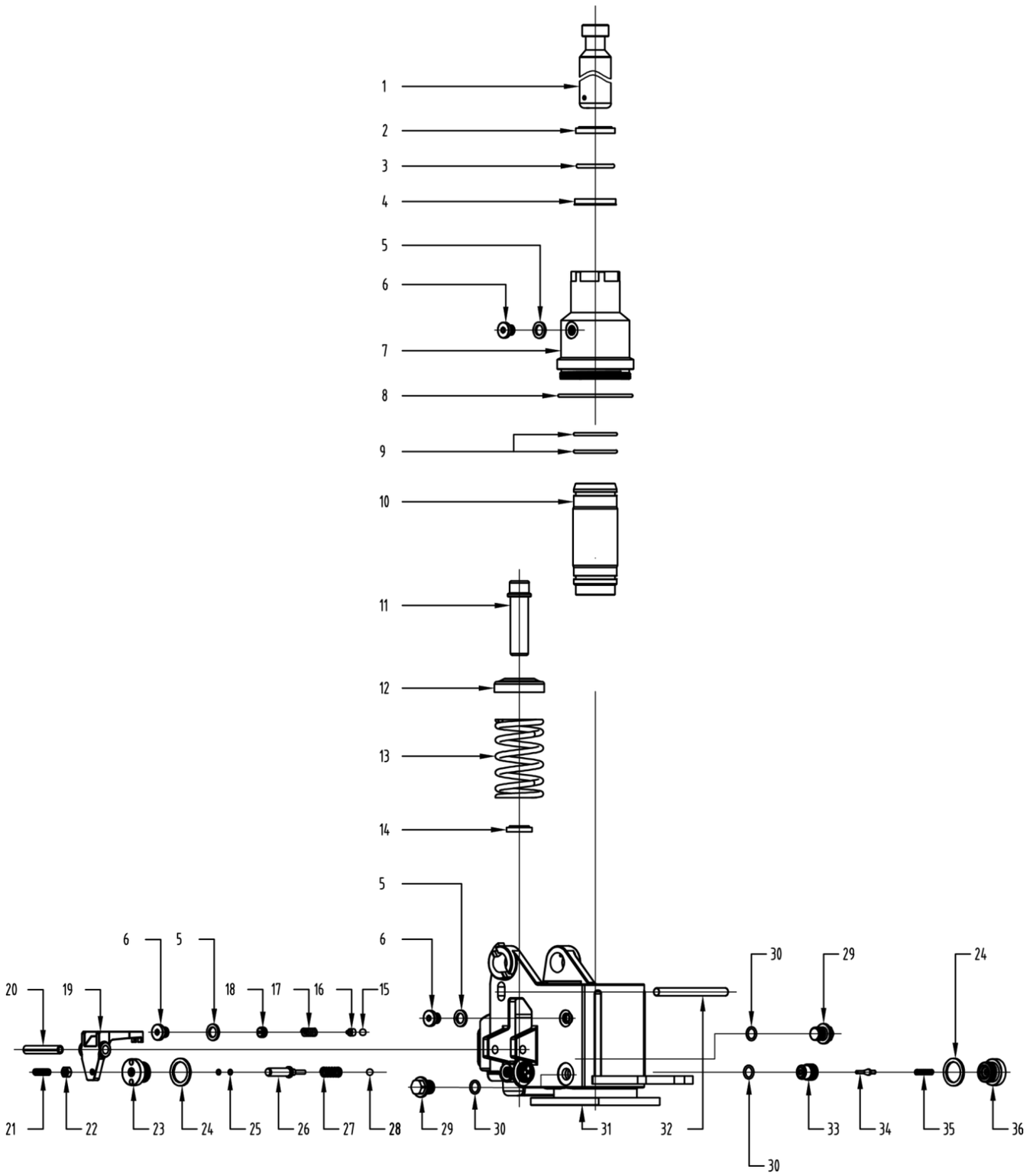

kupit-shtabeler.ru

4.1 Oil cylinder Assembly — Parts list

NO.	Code	Name	Specification	Qty.	Remark
1	CDD-ME2T-685-35-0001	Plunger lever		1	
2	DHS32	Dustband		1	
3	GB/T3452.1-1992	0-ring	Φ31.5×3.55	1	
4	UHS32	Seal ring		1	
5	CDB-MA2T-685-0050	Bonded washer	Φ10	3	
6	C-10	The little screw		3	
7	CDD-ME2T-685-35-0002	Outer cylinder		1	
8	GB/T3452.1-1992	0-ring	Φ69×2.5	1	
9	GB/T3452.1-1992	0-ring	Φ39×3	2	
10	CDD-ME2T-685-35-0003	Inner cylinder	L110	1	
11	CDD-ME2T-685-0020	Small pump core		1	
12	C-13	spring cover		1	
13	CDD-ME2T-685-0030	The pump core spring		1	
14	DHS18	Dustband		1	
15	CDB-MA2T-685-0180	Steel ball	Φ4.75	1	
16	C-8	Safety seat		1	
17	C-17	Safety valve spring		1	
18	C-9	Safety valve regulating screw		1	
19	CDD-ME2T-685-0040	Switch plate		1	
20	GB/T 879.2-2000	elastic cylindrical pin	Φ8×50	1	
21	GB/T73-1985	Slotted set screws with cone point	M6×25	1	
22	GB/T41-2000	hex nut	M6	1	
23	C-11	Copper nut		1	
24	CDB-MA2T-685-0240	bonded washer	Φ20	2	
25	GB/T3452.1-1992	0-ring	Φ11×1.9	2	
26	CDD-ME2T-685-0040	Mandril		1	
27	C-15	Msnftil spring		1	
28	CDB-MA2T-685-0270	Steel ball	Φ6.35	1	
29		Plug 1/4		2	
30	GB/T3452.1-1992	0-ring	Φ14×1.9	2	
31	CDD-ME2T-685-35-0070	Oil pumper welded		1	
32	CDB-MA2T-685-35-0170	Locating rod	Φ8×100	1	
33	H-3290	Valve body		1	
34	H-3310	Valve element		1	
35	H-3320	Valve element spring		1	
36	C-7	plug screw		1	

kupit-shtabeler.ru

5.1 Electric appliance subassembly

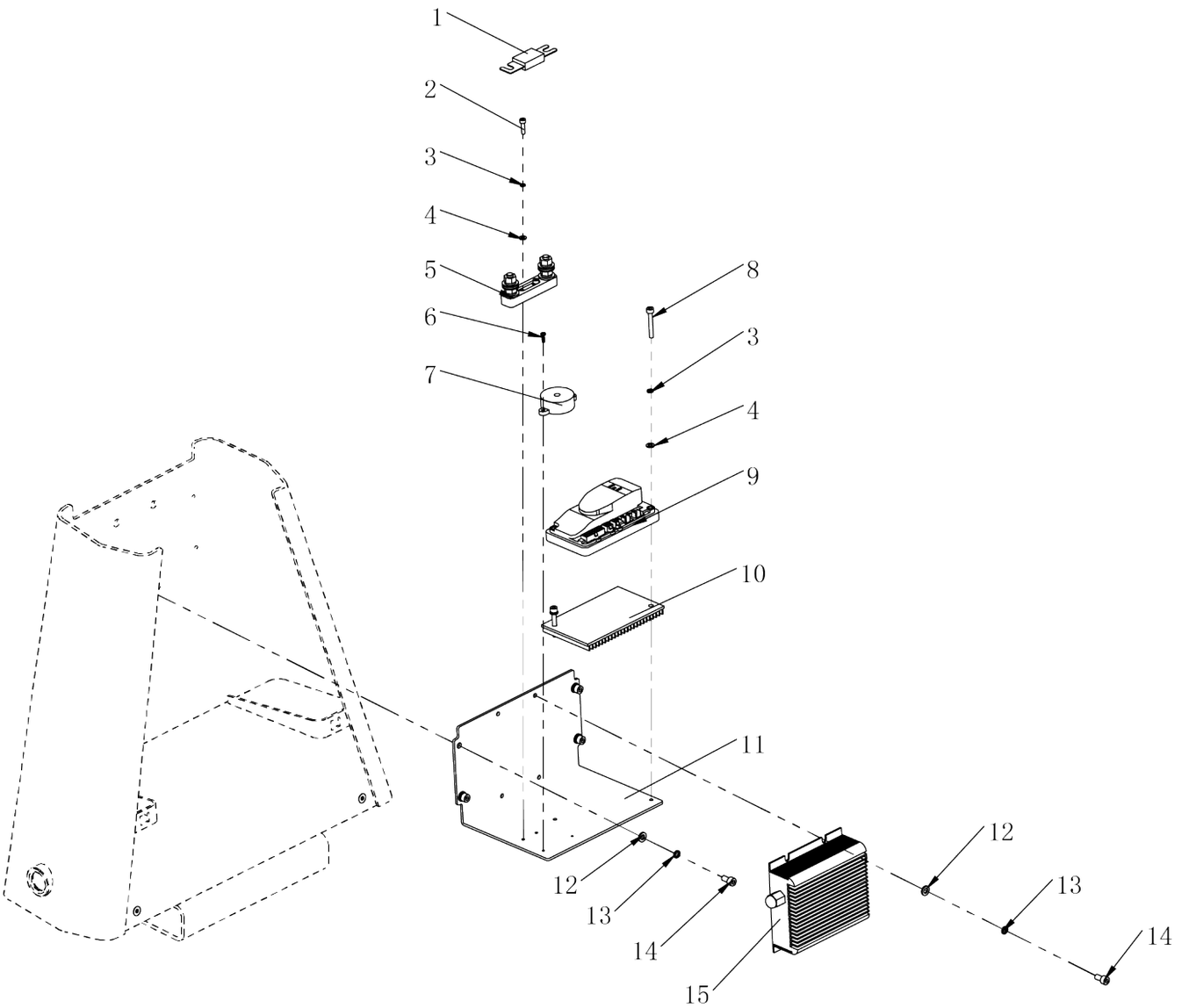

kupit-shtabeler.ru

5.1 Electric appliance subassembly — Parts list

NO.	Code	Name	Specification	Qty.	Remark
1	19.03450	fuse (SL15GD)	CNP-100A	1	
2	03.0133	hexagon socket cap screws	M5×16	2	GB/T 70.1-2000
3	03.0007	spring washer	Φ5	4	GB/T 93-1987
4	03.0055	flat washer	Φ5	4	GB/T 95-2002
5	02.01.3057	Fuse base	SYY	1	
6	03.05361	cross recess pan head screw	M3×10	2	GB/T 818-2000
7	19.03620	Horn (SL13)	3-24V	1	
8	03.01340	hexagon socket cap screws	M5×35	2	GB/T 70.1-2000
9	02.KZQ.2376	controller	D2-3101	1	Standard
	02.KZQ.2151	controller	1212P-2501	1	Optional
10	02.01.33281	Controller mounting plate		1	
11	30.38.0038	Electric mounting plate		1	
12	03.0049	flat washer	Φ6	8	GB/T 95-2002
13	03.0011	spring washer	Φ6	8	GB/T 93-1987
14	03.0145	hexagon socket cap screws	M6×12	8	GB/T 70.1-2000
15	02.CDQ.3310	Internally charger (YNmaintenance-free battery)	24V/5A	1	

kupit-shtabeler.ru

Исходный документ

Оригинал: OL19-1_CBD20J-B-S Part list.doc. Содержимое этой копии не является подтверждением применимости деталей к другим моделям.

Сведения и рисунки оставлены в формулировках источника. Изменены только расположение на страницах и оформление таблиц.