**Купить штабелёр**
kupit-shtabeler.ru +7 495 159-44-32 zakaz@kupit-shtabeler.ru
Справочная копия документа изготовителя. Масштаб исходных страниц сохранён.

# 本零件目录汇集了1.4t电动前移式叉车的零部件

## 查询方法

步骤一：在检索目录中找到系统或总成该图所在页次并翻至所标页次，找到该图；

步骤二：在其图中找出所需零部件，以及它所标注的序号；

步骤三：根据这个序号，在其后附表中可以查到系统或零件的详细信息。

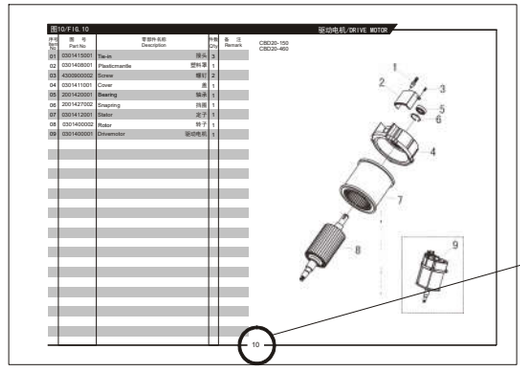


## 订购零部件时，务请写清叉车的型号、出厂编号、所需零部件的图号及订购数量

## 在维修时，请使用正规渠道提供的本公司零部件，以确保叉车质量

## 恕不能将本产品可能进行的零部件改进在本图册中同时修改，您可以从本公司的销售和配件公司获得最新资料

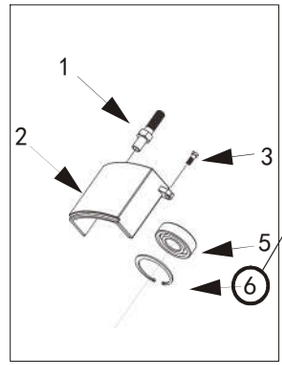


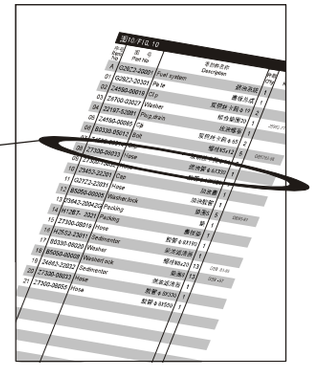


## 叉车型号说明

C Q D H 14-850

| | |
|---|---|
| 产品配置号 | |
| 1.4吨 | |
| 货叉 | |
| 电动 | |
| 前移式叉车 | |

具体车型

CQDH14-850

Купить штабелёр
kupit-shtabeler.ru +7 495 159-44-32 zakaz@kupit-shtabeler.ru
Справочная копия документа изготовителя. Масштаб исходных страниц сохранён.

# THIS PARTS CATALOGUE COVERS PARTS IN THE MOST OF 1.4 TON ELECTRIC REACH TRUCKS

## Indexing Way

**Step1:Finding out the page for the system or assembly** required from the indexing contents and turn to the required page, finding out the concerned drawing;

**Step2:From the detail drawing,find out the parts and** their item numbers.

**Step3:According to these item numbers, find out details** of these parts of the system or assembly from attached table.

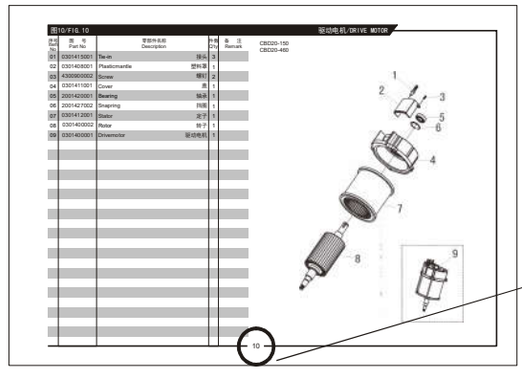

This page code denotes this system or assembly drawing shows on the page.

**When ordering the parts or components,please indicate the model and series number of the your forklift truck,the drawing number of parts or components you require and their quantity.**

**When you replace parts or components,please apply the real goods made by our company to ensure the truck's guality.**

**We reserve modification right without notice Designations in the CATALOGUE**

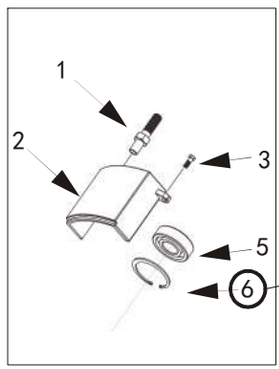


According to these item numbers, find out details of hese parts or the system from attached table.

Every part or componet in the drawing is expressed with only item number

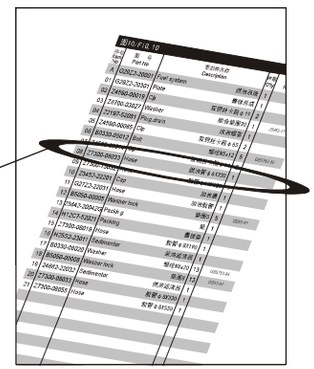

C Q D H 14-850

| |
|---|
| Configuration Number |
| 1.4 ton capacity |
| Fork |
| Electric |
| Reach trucks |

**The following trucks**

CQDH14-850

Купить штабелёр
kupit-shtabeler.ru +7 495 159-44-32 zakaz@kupit-shtabeler.ru
Справочная копия документа изготовителя. Масштаб исходных страниц сохранён.
kupit-shtabeler.ru

## 目录/INDEX


| | | |
|---|---|---|
| 图1 转向操纵系统 | 1 | Fig.1 Steering control system |
| 图2 手柄总成 | 2 | Fig.2 Handle assembly |
| 图3 控制盒总成 | 3 | Fig.3 Switch box assembly |
| 图4 行走开关总成 | 4 | Fig.4 Stepped switch assembly |
| 图5 转向操纵系统 | 5 | Fig.5 Steering control system |
| 图6 手柄总成 | 6 | Fig.6 Handle assembly |
| 图7 行走开关总成 | 7 | Fig.7 Stepped switch assembly |
| 图8 电位器组装 | 8 | Fig.8 Potentiometer assembly |
| 图9 驱动系统 | 9 | Fig.9 Driving system |
| 图10 齿轮箱总成 | 10 | Fig.10 Gear box assembly |
| 图11 驱动电机 | 11 | Fig.11 Driving motor |
| 图12 液压系统 | 12 | Fig.12 Hydraulic system |
| 图13 液压动力单元 | 13 | Fig.13 Hydraulic power unit |
| 图14 车身 | 14 | Fig.14 Frame |
| 图15 车身 | 15 | Fig.15 Frame |
| 图16 配电板总成 | 16 | Fig.16 Electric panel assembly |
| 图17 萨牌配电板总成 | 17 | Fig.17 ZAPI electric panel assembly |
| 图18 外门架组件 | 18 | Fig.18 Mast assy-outer |
| 图19 中门架组件 | 20 | Fig.19 Mast assy-middle |
| 图20 油缸总成 | 21 | Fig.20 Cylinder assembly |
| 图21 内门架组件 | 22 | Fig.21 Mast assy-inner |
| 图22 中间油缸总成 | 24 | Fig.22 Middle Cylinder assembly |
| 图23 起升架总成 | 25 | Fig.23 Mast assy assembly |
| 图24 剪叉架总成 | 27 | Fig.24 Shear fork assembly |
| 图25 叉架和挡货架 | 28 | Fig.25 Fork & Carriage & Backrest |

Купить штабелёр
kupit-shtabeler.ru +7 495 159-44-32 zakaz@kupit-shtabeler.ru
Справочная копия документа изготовителя. Масштаб исходных страниц сохранён.
kupit-shtabeler.ru

## 目录/INDEX

图26 叉架和挡货架 ····· 29 ····· Fig.26 Fork & Carriage & Backrest
图27 叉架和挡货架 ····· 30 ····· Fig.27 Fork & Carriage & Backrest
图28 倾斜油缸总成 ····· 32 ····· Fig.28 Incline cylinder assembly
图29 倾斜油缸总成 ····· 33 ····· Fig.29 Incline cylinder assembly
图30 倾斜油缸总成 ····· 34 ····· Fig.30 Incline cylinder assembly
图31 电池组件 ····· 35 ····· Fig.31 Battery assembly

Купить штабелёр
kupit-shtabeler.ru +7 495 159-44-32 zakaz@kupit-shtabeler.ru
Справочная копия документа изготовителя. Масштаб исходных страниц сохранён.

## 图1/FIG.1 转向操纵系统/STEERING CONTROL SYSTEM

| 序号 Item No | 图号 Part No | 零部件名称 Description | 件数 Q'ty | 备注 Remark |
|---|---|---|---|---|
| 01 | 8500500001 | Handle assembly 手柄总成 | 1 | |
| | 9700500003 | Handle assembly(without footplate) 手柄总成(不带踏板) | 1 | |
| 02 | 2000508001 | Outer covering plate 手柄座盖板 | 1 | |
| 03 | 2000537002 | Washer 垫圈 | 2 | |
| 04 | 2000541002 | Screw 螺栓 | 2 | |
| 05 | 2000512002 | Lubricated bush 自润滑轴承 | 2 | |
| 06 | 2000513001 | Pin shaft 销轴 | 1 | |
| 07 | 2000536001 | Spring pin 弹性销 | 1 | |
| 08 | 2000534003 | Rubber washer 缓冲垫 | 1 | |
| 09 | 2000931004 | Screw 螺栓 | 2 | |
| 10 | 2000534002 | Rubber sleeve 轴套 | 1 | |
| 11 | 2000513003 | Pin shaft 销轴 | 1 | |
| 12 | 2000541004 | Screw 螺栓 | 2 | |
| 13 | 4300534001 | Rubber sack 橡胶密封圈 | 1 | |
| 14 | 2000525004 | Screw 螺栓 | 1 | |
| 15 | 2000535005 | Installing plate 调整块 | 1 | |
| 16 | 2000504001 | Steel ball 钢球 | 1 | |
| 17 | 2000507004 | Inching switch 微动开关 | 1 | |
| 18 | 2000537003 | Washer 垫圈 | 2 | |
| 19 | 2000541001 | Screw 螺栓 | 2 | |
| 20 | 2000541003 | Screw 螺栓 | 2 | |
| 21 | 2000537001 | Washer 垫圈 | 6 | |
| 22 | 2000508002 | Inner covering plate 盖板 | 1 | |
| 23 | 4300501001 | Handle socket 手把座 | 1 | |
| 24 | 8100500002 | Electron handle grip 电子转向 | 1 | |
| 25 | 5500521001 | Gear 被动齿轮 | 1 | |
| 26 | 5501221001 | Gear 主动齿轮 | 1 | |
| 27 | 9300200001 | Sensor assembly 角度传感器总成 | 1 | |
| 28 | 8500517001 | Base plate 垫板 | 1 | |

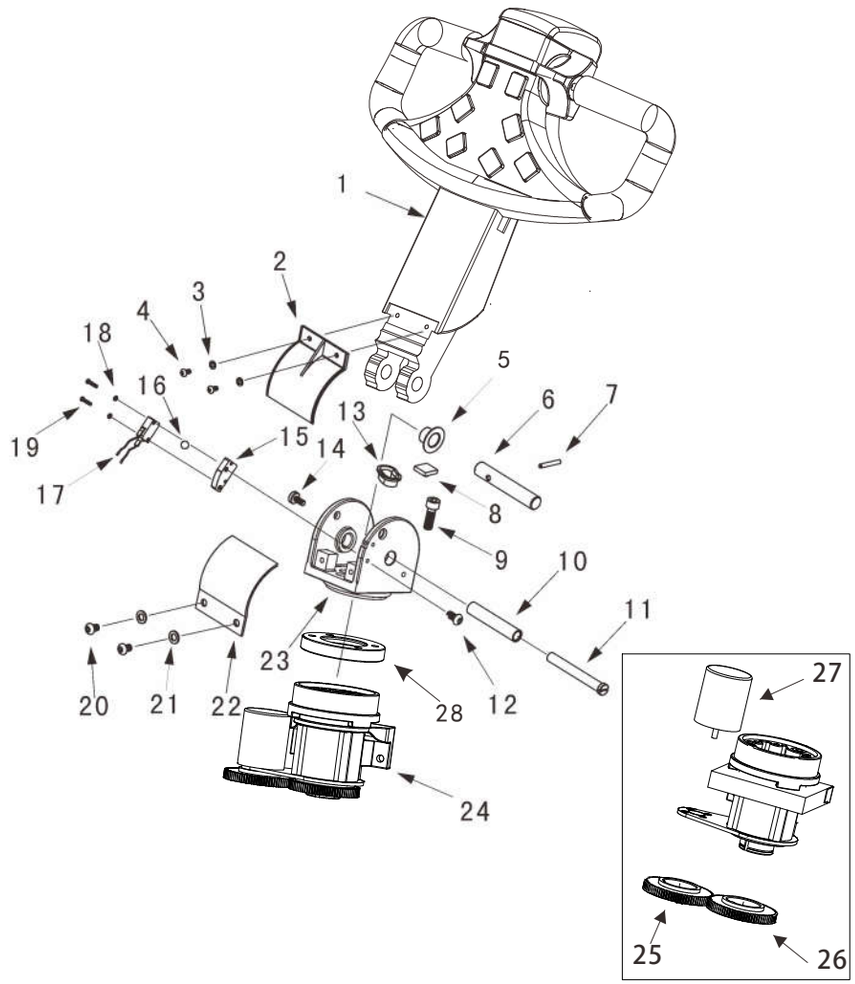


1

kupit-shtabeler.ru

## 图2/FIG.2 手柄总成(带倾斜)/HANDLE ASSEMBLY(INCLINE)

| 序号 Item No | 图号 Part No | 零部件名称 Description | 件数 Q'ty | 备注 Remark |
|---|---|---|---|---|
| 01 | 8500500001 | Handle assembly 力达款手柄总成 | 1 | |
| | 9700500003 | Handle assembly(without footplate) 力达款手柄总成(不带踏板) | 1 | |
| 02 | 9700500005 | Switch box assembly 控制盒总成 | 1 | |
| 03 | 2000442001 | Screw 螺钉 | 4 | |
| 04 | 4000517003 | Handle tube 铝手柄 | 1 | |
| | 4300501004 | Handle tube(without footplate) 铝手柄(不带踏板) | 1 | |
| 05 | 6000502002 | Pneumatic spring seat 气弹簧座 | 1 | |
| 06 | 2000525012 | Joint 气弹簧球头 | 1 | |
| 07 | 4600519001 | Pneumatic spring complete 气弹簧 | 1 | |
| 08 | 2000527002 | Snap ring 挡圈 | 1 | |
| 09 | 2000520003 | Joint 下接头 | 1 | |
| 10 | 2000525006 | Shaft 轴 | 1 | |
| 11 | 1000527001 | Snap ring 挡圈 | 1 | |
| 12 | 4000517001 | Covering plate 盖板 | 1 | |
| | 4300501003 | Covering plate(without footplate) 盖板(不带踏板) | 1 | |
| 13 | 2000542001 | Screw 螺钉 | 4 | |

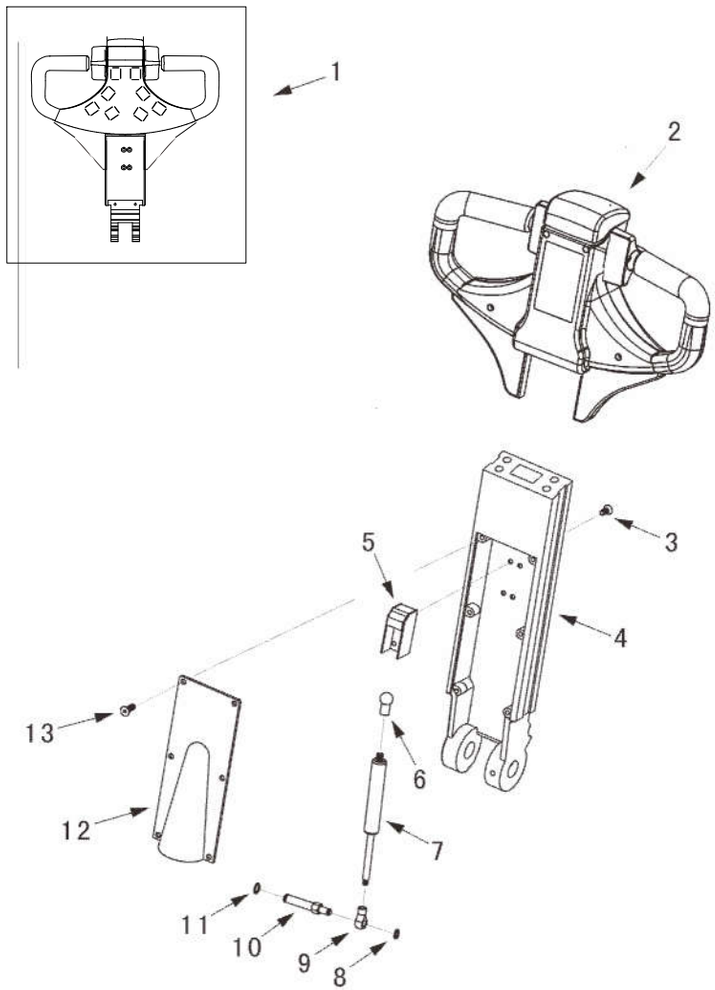

**Купить штабелёр**
kupit-shtabeler.ru +7 495 159-44-32 zakaz@kupit-shtabeler.ru
Справочная копия документа изготовителя. Масштаб исходных страниц сохранён.
kupit-shtabeler.ru

## 图3/FIG.3 控制盒总成(带倾斜)/SWITCH BOX ASSEMBLY(INCLINE)

| 序号 Item No | 图 号 Part No | 零部件名称 Description | 件数 Q'ty | 备 注 Remark |
|---|---|---|---|---|
| 01 | 9700500005 | Switch box assembly 控制盒总成 | 1 | |
| 02 | 4300508001 | Emergency reverser button cover 紧急换向按钮盖 | 1 | |
| 03 | 2000519004 | Spring 弹簧 | 1 | |
| 04 | 9700500004 | Cover assembly 手柄盖总成 | 1 | |
| 05 | 4300500004 | Stepped switch assembly 行走开关总成 | 1 | |
| 06 | 2000507002 | Emergency reverser button 紧急换向按钮 | 1 | |
| 07 | 4300517001 | Handle 手柄 | 1 | |
| 08 | 6000131007 | Screw 螺钉 | 4 | |
| 09 | 1001437003 | Washer 垫圈 | 4 | |
| 10 | 1200518001 | Supporting plate 支撑板 | 1 | |
| 11 | 3201431001 | Screw 螺钉 | 2 | |
| 12 | 6000131006 | Screw 螺钉 | 2 | |
| 13 | 9300517001 | Seat 微动开关座 | 2 | |
| 14 | 1000515002 | Shell 接插件母胶壳 | 1 | |
| 15 | 1000515001 | Shell 接插件公胶壳 | 1 | |

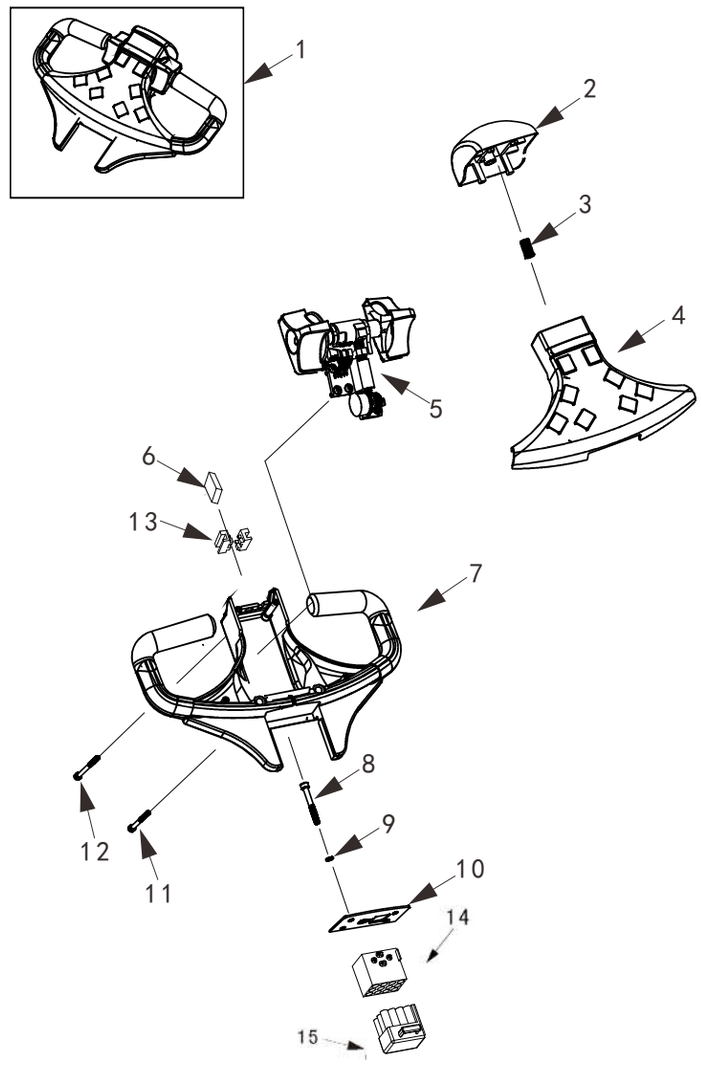


3

Купить штабелёр
kupit-shtabeler.ru +7 495 159-44-32 zakaz@kupit-shtabeler.ru
Справочная копия документа изготовителя. Масштаб исходных страниц сохранён.

## 图4/FIG.4 行走开关总成/STEPPED SWITCH ASSEMBLY

| 序号 Item No | 图号 Part No | 零部件名称 Description | 件数 Q'ty | 备注 Remark |
|---|---|---|---|---|
| 01 | 4300500004 | Stepped switch assembly 行走开关总成 | 1 | |
| 02 | 2000538005 | Screw 螺栓 | 2 | |
| 03 | 2000507003 | Inching switch 微动开关 | 2 | |
| 04 | 2000535001 | Isolate block 绝缘块 | 2 | |
| 05 | 2001141005 | Screw 螺栓 | 2 | |
| 06 | 4300518003 | Fastening bracket 固定支架 | 1 | |
| 07 | 1000504001 | Washer 垫圈 | 2 | |
| 08 | 2000539002 | Nut 螺母 | 2 | |
| 09 | 4300501005 | Cam 凸轮 | 1 | |
| 10 | 4300513001 | Cam Shaft 凸轮安装轴 | 1 | |
| 11 | 1002343003 | Rack 齿条 | 1 | |
| 12 | 2000519004 | Spring 弹簧 | 1 | |
| 13 | 4300900002 | Screw 螺钉 | 2 | |
| 14 | 2001437005 | Washer 垫圈 | 2 | |
| 15 | 4300540001 | Right control knob 右控制手柄 | 1 | |
| 16 | 4300512001 | Shaft sleeve 轴套 | 2 | |
| 17 | 4300535001 | Fastening bracket 固定支架 | 1 | |
| 18 | 2000541004 | Screw 螺钉 | 4 | |
| 19 | 4300540002 | Left control knob 左控制手柄 | 1 | |
| 20 | 4300518004 | Baffle 挡板 | 1 | |
| 21 | 2000521001 | Gear 齿轮 | 1 | |
| 22 | 4700418001 | Fastening bracket 固定支架 | 1 | |
| 23 | 4700400001 | Potentiometer 电位器 | 1 | |

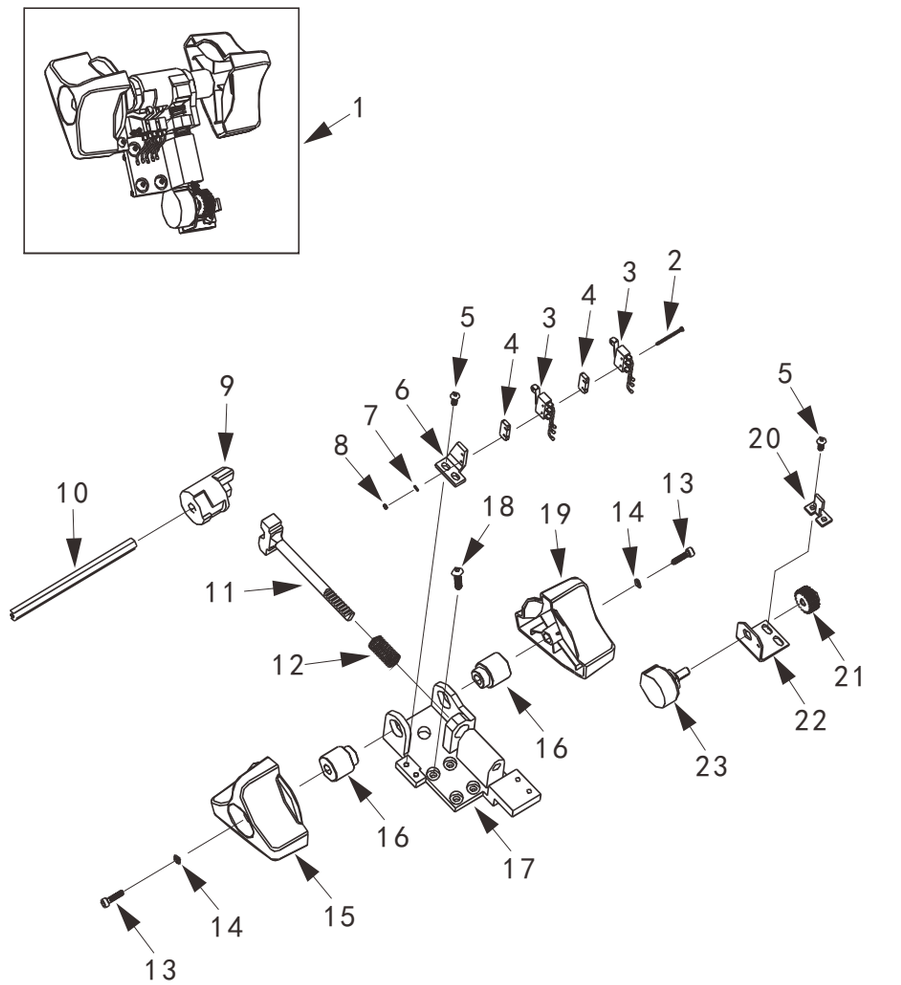

kupit-shtabeler.ru

## 图5/FIG.5 转向操纵系统/STEERING CONTROL SYSTEM

| 序号 Item No | 图号 Part No | 零部件名称 Description | 件数 Q'ty | 备注 Remark |
|---|---|---|---|---|
| 01 | 8500718002 | Handle assembly 手柄总成 | 1 | |
| 02 | 2000942001 | Screw 螺栓 | 6 | |
| 03 | 8500529001 | Handle covering plate 手柄盖板 | 1 | |
| 04 | 8500529002 | Aluminum handle 铝手柄 | 1 | |
| 05 | 2000542001 | Screw 螺栓 | 8 | |
| 06 | 8500519001 | Coil spring 卷簧 | 2 | |
| 07 | 8500535001 | Spacer 隔套 | 1 | |
| 08 | 8500520001 | Composite bearing 复合轴承 | 2 | |
| 09 | 8500508001 | Plastic cover 手柄座塑料面板 | 1 | |
| 10 | 2000504001 | Steel ball 钢球 | 1 | |
| 11 | 8500534001 | Fixed frame 固定座 | 1 | |
| 12 | 2000507004 | Micro switch 手柄微动开关 | 1 | |
| 13 | 8500518001 | Switch seat 微动开关座 | 1 | |
| 14 | 1001036001 | Pin 弹性销 | 1 | |
| 15 | 2000542003 | Screw 螺栓 | 2 | |
| 16 | 2000542001 | Screw 螺栓 | 8 | |
| 17 | 8500518002 | Handle support 手柄座 | 1 | |
| 18 | 8500513001 | Shaft 轴 | 1 | |

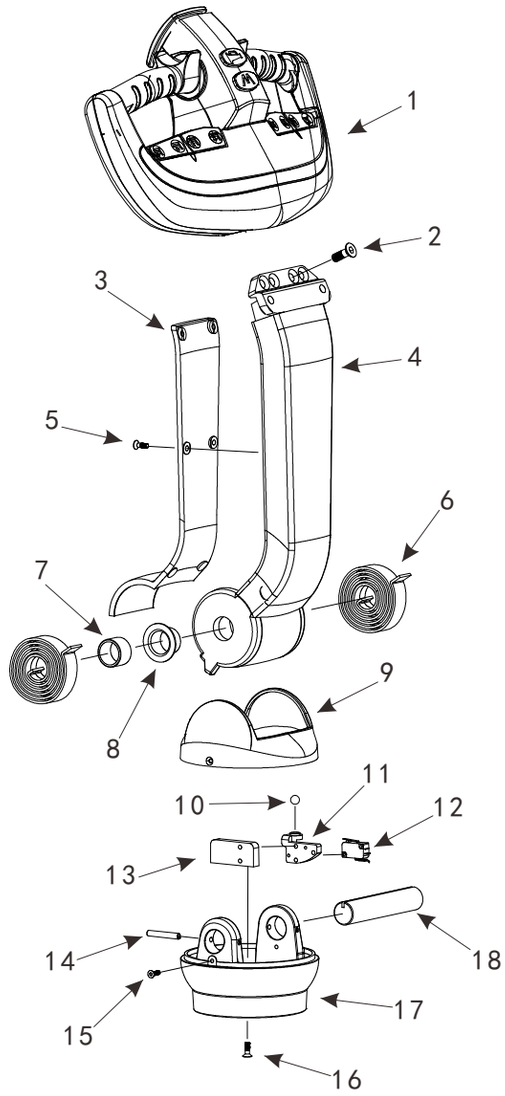

Купить штабелёр
kupit-shtabeler.ru +7 495 159-44-32 zakaz@kupit-shtabeler.ru
Справочная копия документа изготовителя. Масштаб исходных страниц сохранён.

## 图6/FIG.6 手柄总成/HANDLE ASSEMBLY

| 序号 Item No | 图号 Part No | 零部件名称 Description | 件数 Q'ty | 备注 Remark |
|---|---|---|---|---|
| 01 | 8500517003 | Handrail cover 手柄操作盒扶手前盖 | 1 | |
| 02 | 8500517005 | Left handle 左手把 | 1 | |
| 03 | 8500517006 | Right handle 右手把 | 1 | |
| 04 | 8500517007 | Square nut 方螺母 | 2 | |
| 05 | 4000831001 | Screw 螺钉 | 2 | |
| 06 | 3201431001 | Screw 螺钉 | 2 | |
| 07 | 8500517002 | Operating box armrest 手柄操作盒扶手 | 1 | |
| 08 | 8500540001 | Lateral move button 侧移按钮 | 1 | |
| 09 | 8500540002 | Up & down button 起升下降按钮 | 1 | |
| 10 | 8500540003 | Adjustable button 剪刀伸缩按钮 | 1 | |
| 11 | 8500540004 | Tilt button 倾斜按钮 | 1 | |
| 12 | 8500431001 | Screw 螺栓 | 8 | |
| 13 | 8500540005 | Horn button 喇叭按钮 | 1 | |
| 14 | 8500517004 | Operating box front cover 手柄操作盒前盖 | 1 | |
| 15 | 8500540006 | Mode button 模式按钮 | 1 | |
| 16 | 8500519003 | Polyurethane spring 聚氨酯弹簧 | 2 | |
| 17 | 8500535003 | Button base 按钮底座 | 2 | |
| 18 | 8500506001 | Micro switch 微动开关 | 2 | |

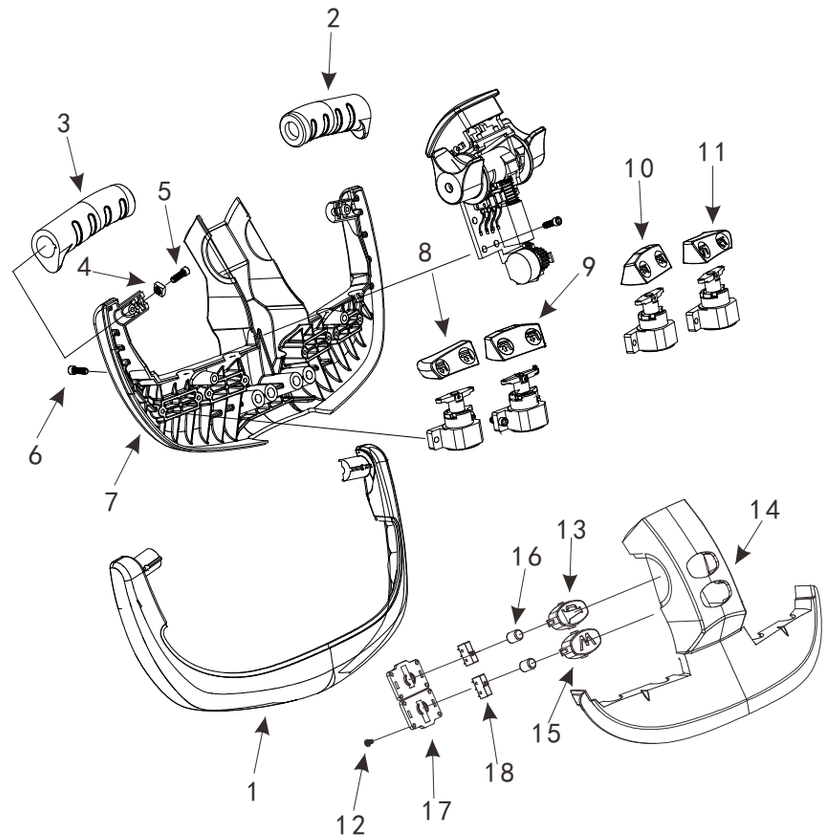

Купить штабелёр
kupit-shtabeler.ru +7 495 159-44-32 zakaz@kupit-shtabeler.ru
Справочная копия документа изготовителя. Масштаб исходных страниц сохранён.

## 图7/FIG.7 行走开关总成/STEPPED SWITCH ASSEMBLY

| 序号 Item No | 图号 Part No | 零部件名称 Description | | 件数 Q'ty | 备注 Remark |
|---|---|---|---|---|---|
| 01 | 8500533001 | Plastic pin | 紧急反向塑料销 | 1 | |
| 02 | 8500508002 | Emergency reverse button cover | 紧急反向开关盖 | 1 | |
| 03 | 8500431001 | Screw | 螺钉 | 1 | |
| 04 | 8500519002 | Spring | 弹簧 | 4 | |
| 05 | 8500506001 | Micro switch | 微动开关 | 1 | |
| 06 | 2000538005 | Screw | 螺栓 | 2 | |
| 07 | 4300501005 | Cam | 凸轮 | 1 | |
| 08 | 8500517008 | Handle ear | 手柄耳朵 | 2 | |
| 09 | 4300900002 | Screw | 螺栓 | 2 | |
| 10 | 1002343003 | Rack | 齿条 | 1 | |
| 11 | 2000519004 | Spring | 弹簧 | 1 | |
| 12 | 2001141005 | Screw | 螺钉 | 2 | |
| 13 | 4300518004 | Baffle | 挡板 | 1 | |
| 14 | 2000521001 | Gear | 齿轮 | 1 | |
| 15 | 4700418001 | Mounting plate | 安装板 | 1 | |
| 16 | 4700400001 | Potentiometer | 电位器 | 1 | |
| 17 | 2000507003 | Micro switch | 微动开关 | 2 | |
| 18 | 2000535001 | Isolation block | 隔离块 | 2 | |
| 19 | 2000538005 | Screw | 螺栓 | 2 | |
| 20 | 8500513002 | Camshaft | 凸轮安装轴 | 1 | |
| 21 | 8500534002 | Ear block | 耳朵垫块 | 2 | |
| 22 | 8500517009 | Switch seat | 开关座 | 1 | |

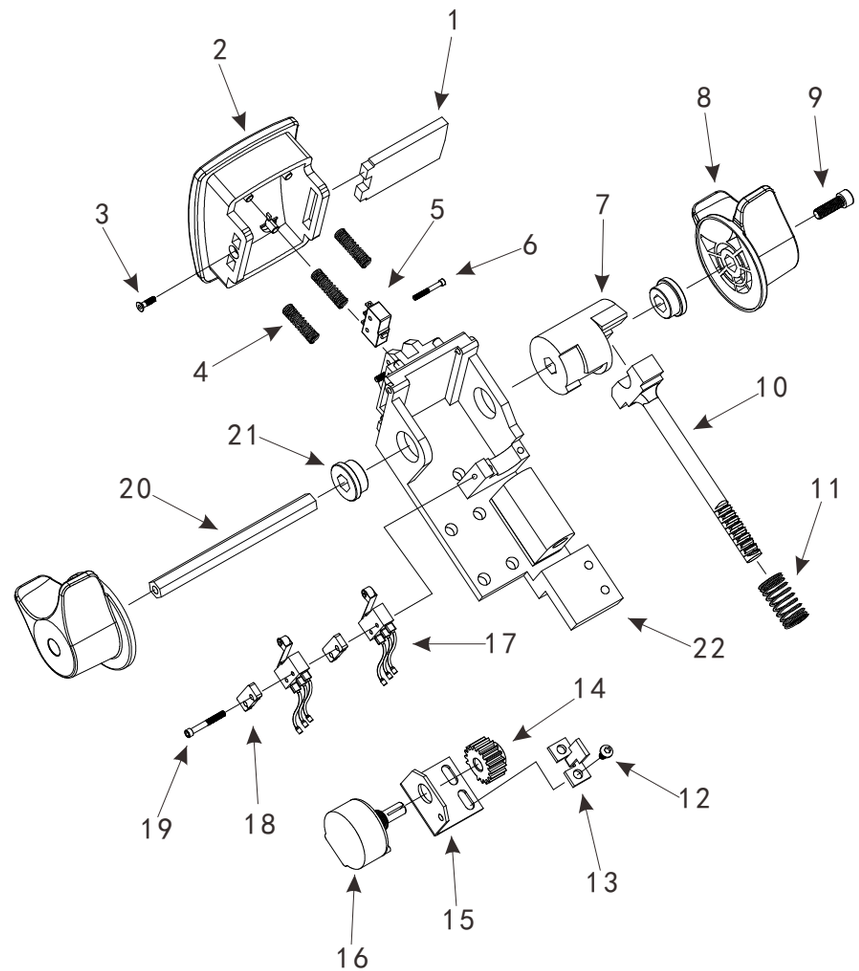


7

## 图8/FIG.8 电位器组装/POTENTIOMETER ASSEMBLY

| 序号 Item No | 图 号 Part No | 零部件名称 Description | 件数 Q'ty | 备 注 Remark |
|---|---|---|---|---|
| 01 | 8500535002 | Button connection plate 按钮连接板 | 1 | |
| 02 | 8500431001 | Screw 螺栓 | 3 | |
| 03 | 8600519001 | Torsional spring 扭簧 | 1 | |
| 04 | 8500507001 | Potentiometer 电位器 | 1 | |
| 05 | 8500531001 | Screw 螺栓 | 2 | |

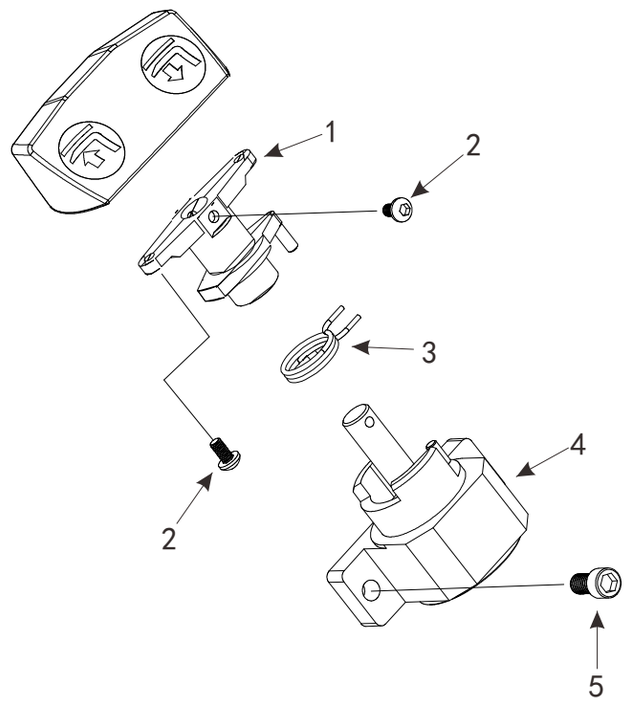


8

Купить штабелёр
kupit-shtabeler.ru +7 495 159-44-32 zakaz@kupit-shtabeler.ru
Справочная копия документа изготовителя. Масштаб исходных страниц сохранён.

## 图9/FIG.9 驱动系统/DRIVING SYSTEM

| 序号 Item No | 图号 Part No | 零部件名称 Description | 件数 Q'ty | 备注 Remark |
|---|---|---|---|---|
| 01 | 7800300001 | Motor 电机 | 1 | |
| 02 | 1000130001 | Screw 螺栓 | 4 | |
| 03 | 2001037001 | Washer 垫圈 | 4 | |
| 04 | 9300400002 | Encoder 编码器 | 1 | |
| 05 | 5501221004 | Gear 齿轮 | 1 | |
| 06 | 7800337001 | Washer 垫圈 | 1 | |
| 07 | 7800330002 | Screw 螺栓 | 1 | |
| 08 | 8100318001 | Flange 浮动架 | 1 | |
| 09 | 0300320001 | Axletree 变速箱大轴承 | 1 | |
| 10 | 9700406001 | Limitation switch 光电开关 | 1 | |
| 11 | 9300312002 | Sleeve 衬套 | 1 | |
| 12 | 7800300003 | Gear box assembly 变速箱总成 | 1 | |
| 13 | 4000332001 | Drive wheel assembly 驱动轮总成 | 1 | |
| 14 | 2000325002 | Nut 螺母 | 5 | |
| 15 | 1500300001 | Motor assembly 转向电机总成 | 1 | |

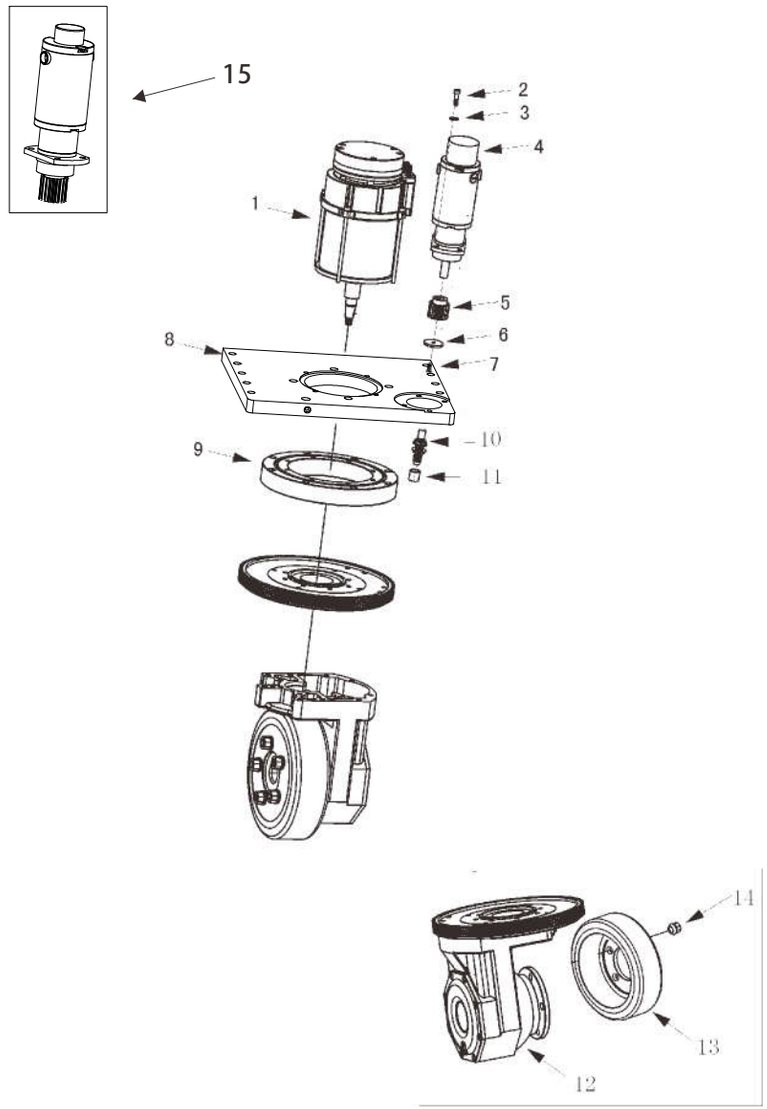

kupit-shtabeler.ru

## 图10/FIG.10 齿轮箱总成/GEAR BOX ASSEMBLY

| 序号 Item No | 图号 Part No | 零部件名称 Description | 件数 Q'ty | 备注 Remark |
|---|---|---|---|---|
| 01 | 1000131001 | Screw 螺栓 | 4 | |
| 02 | 7800321001 | Gear 齿轮 | 1 | |
| 03 | 2000125001 | Nut 螺母 | 1 | |
| 04 | 2000121006 | Gear 齿轮 | 1 | |
| 05 | 2000120003 | Bearing 轴承 | 2 | |
| 06 | 2000141001 | Screw 螺栓 | 8 | |
| 07 | 2000625001 | Bolt 六角头螺栓 | 2 | |
| 08 | 2000603010 | Washer 垫圈 | 2 | |
| 09 | 2000111002 | Sider cover 箱体侧盖 | 1 | |
| 10 | 2000128002 | O-ring 0型圈 | 1 | |
| 11 | 4600113001 | Nut 螺母 | 1 | |
| 12 | 2000121002 | Gear 齿轮 | 1 | |
| 13 | 2000120002 | Bearing 轴承 | 1 | |
| 14 | 2000137001 | Washer 垫圈 | 2 | |
| 15 | 2000137002 | Washer 垫圈 | 2 | |
| 16 | 4000201001 | Gear 齿轮 | 1 | |
| 17 | 4000101001 | Flat 平键 | 1 | |
| 18 | 2001037001 | Circlip 弹性挡圈 | 8 | |
| 19 | 2000731003 | Screw 螺栓 | 8 | |
| 20 | 2000120001 | Bearing 轴承 | 1 | |
| 21 | 2000105001 | Seal ring 密封圈 | 1 | |
| 22 | 4600113002 | Spline Shaft 花键轴 | 1 | |
| 23 | 2000126001 | Gear box body 齿轮箱箱体 | 1 | |
| 24 | 7800300003 | Gear box assembly 变速箱总成 | 1 | |

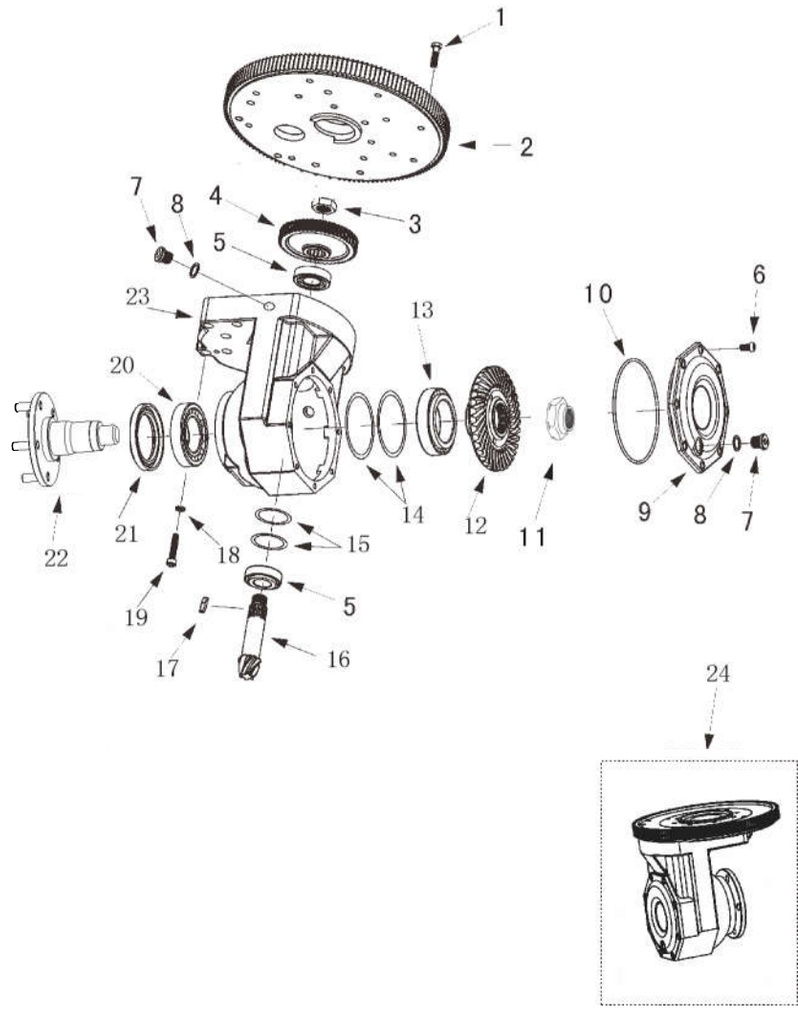


10

Купить штабелёр
kupit-shtabeler.ru +7 495 159-44-32 zakaz@kupit-shtabeler.ru
Справочная копия документа изготовителя. Масштаб исходных страниц сохранён.

## 图11/FIG.11 驱动电机/DRIVING MOTOR

| 序号 Item No | 图号 Part No | 零部件名称 Description | 件数 Q'ty | 备注 Remark |
|---|---|---|---|---|
| 01 | 0301000001 | Brake assembly 电磁制动器 | 1 | |
| 02 | 2001021001 | Spline 花键轴套 | 1 | |
| 03 | 2001427001 | Snap ring 轴用挡圈 | 1 | |
| 04 | 2001012001 | Sleeve 定位套 | 1 | |
| 05 | 4600628001 | O-ring 0型圈 | 1 | |
| 06 | 4001404001 | Flat key 平键 | 1 | |
| 07 | 0301400001 | Motor 电机 | 1 | |
| 08 | 0301431001 | Screw 螺栓 | 4 | |
| 09 | 0301435001 | Position sleeve 过渡定位套 | 1 | |
| 10 | 2001405001 | Dust ring 骨架油封 | 1 | |
| 11 | 2001228001 | O-ring 0型圈 | 1 | |
| 12 | 2001420001 | Bearing 轴承 | 1 | |
| 13 | 2001427001 | Snap ring 轴用挡圈 | 2 | |
| 14 | 2001227003 | Snap ring 轴用挡圈 | 1 | |
| 15 | 2000121005 | Gear 齿轮 | 1 | |
| 16 | 2001435002 | Semicircle key 半圆键 | 1 | |
| 17 | 2001425002 | Nut 螺母 | 1 | |
| 18 | 4601402001 | Joint 磁钢头 | 1 | |
| 19 | 0301427001 | Washer 垫圈 | 3 | |
| 20 | 2001441001 | Screw 螺栓 | 4 | |
| 21 | 1801411001 | Cover 刹车盘上盖 | 1 | |
| 22 | 1801411002 | Wire saddle 线套 | 1 | |
| 23 | 7801006001 | Circuit board 编码器线路板 | 1 | |

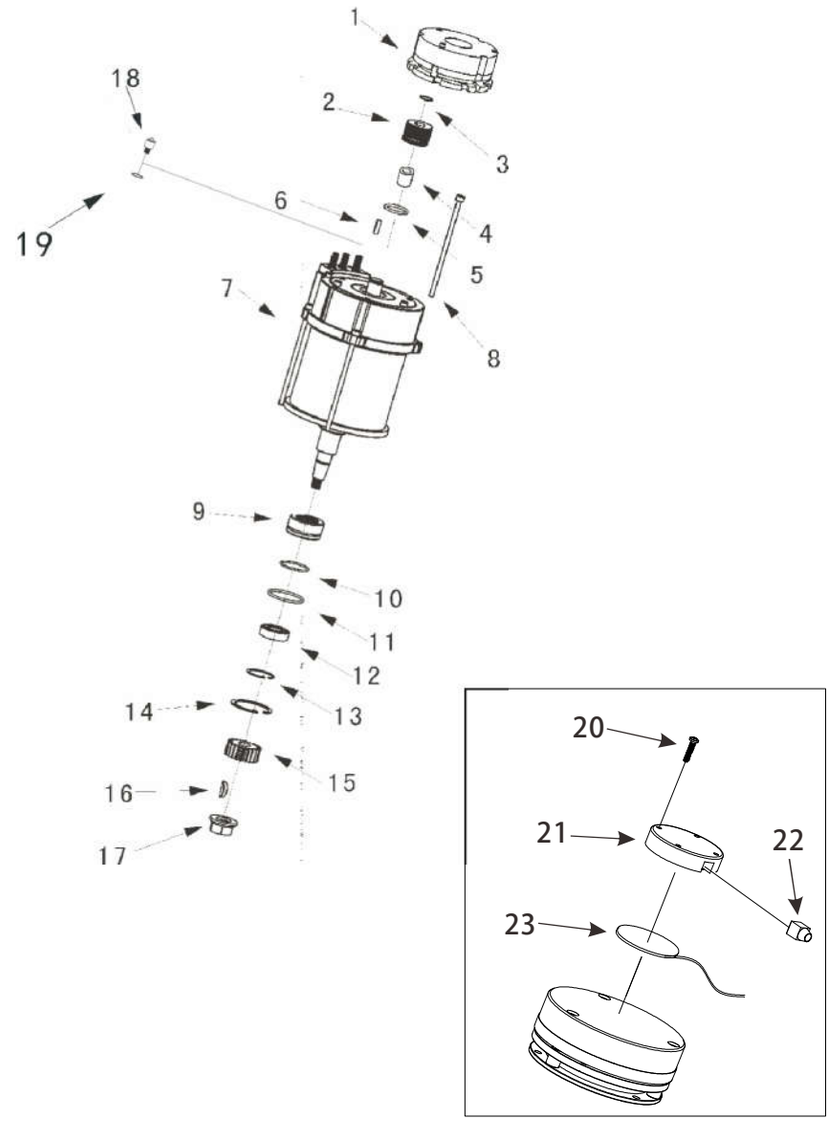

## 图12/FIG.12 液压系统/HYDRAULIC SYSTEM

| 序号 Item No | 图号 Part No | 零部件名称 Description | 件数 Q'ty | 备注 Remark |
|---|---|---|---|---|
| 01 | 8500614011 | Hard oil pipe 硬油管 | 1 | |
| 02 | 8600603003 | Valve body 阀体 | 1 | |
| 03 | 8500614036 | Soft oil pipe 软油管 | 1 | |
| 04 | 8500603015 | Joint 接头 | 4 | |
| 05 | 8500614012 | Hard oil pipe 硬油管 | 1 | |
| 06 | 8500614013 | Hard oil pipe 硬油管 | 1 | |
| 07 | 8600603002 | Valve body 阀体 | 1 | |
| 08 | 8500603016 | Joint 接头 | 2 | |
| 09 | 9700603003 | Joint 接头 | 4 | |
| 10 | 8500614014 | Soft oil pipe 软油管 | 1 | |
| 11 | 8100614023 | Soft oil pipe 软油管 | 1 | |
| 12 | 8500614016 | Soft oil pipe 软油管 | 1 | |
| 13 | 8500603006 | Joint 接头 | 2 | |
| 14 | 8500603024 | Joint 接头 | 1 | |
| 15 | 8500603023 | Joint 接头 | 1 | |

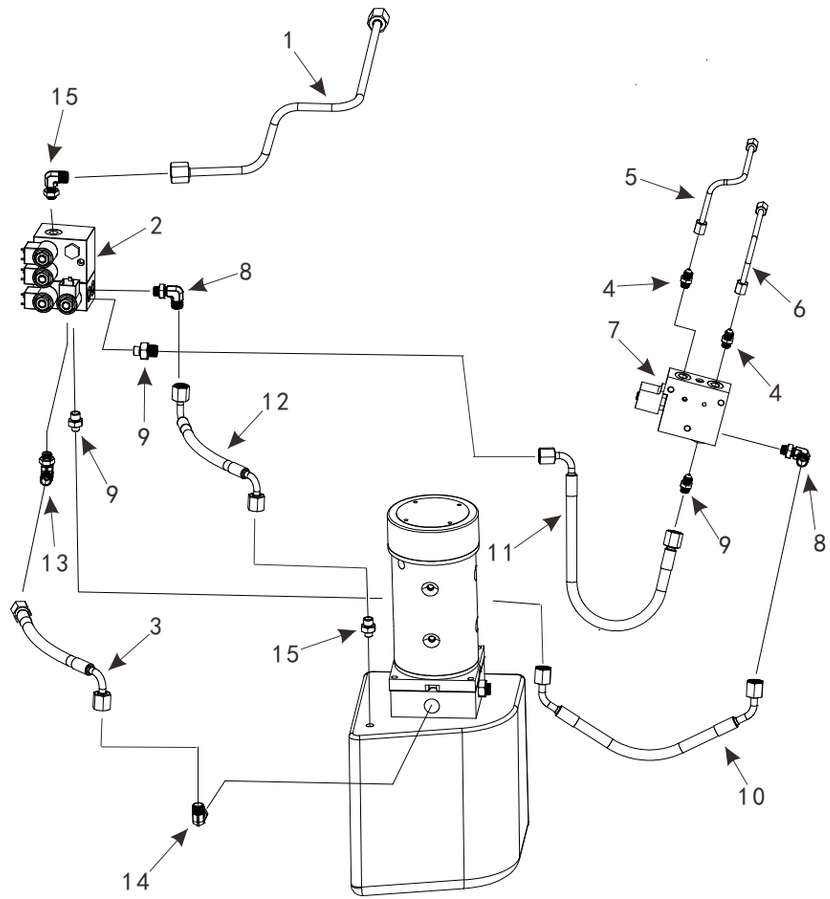


12

kupit-shtabeler.ru

## 图13/FIG.13 液压动力单元/HYDRAULIC POWER UNIT

| 序号 Item | 图号 Part No | 零部件名称 Description | 件数 Q'ty | 备注 Remark |
|---|---|---|---|---|
| 01 | 8500607002 | Hydraulic motor 电机 | 1 | |
| 02 | 2000631004 | Screw 螺钉 | 4 | |
| 03 | 2001037001 | Shim 垫片 | 4 | |
| 04 | 8100602007 | Axle sleeve 轴套 | 1 | |
| 05 | 9700603005 | Valve plate 阀板 | 1 | |
| 06 | 8100605001 | O-ring 0型圈 | 1 | |
| 07 | 9300600018 | Oil pump 油泵 | 1 | |
| 08 | 2000631004 | Screw 螺钉 | 2 | |
| 09 | 2000631003 | Screw 螺钉 | 2 | |
| 10 | 8500626001 | Oil tank 油箱 | 2 | |

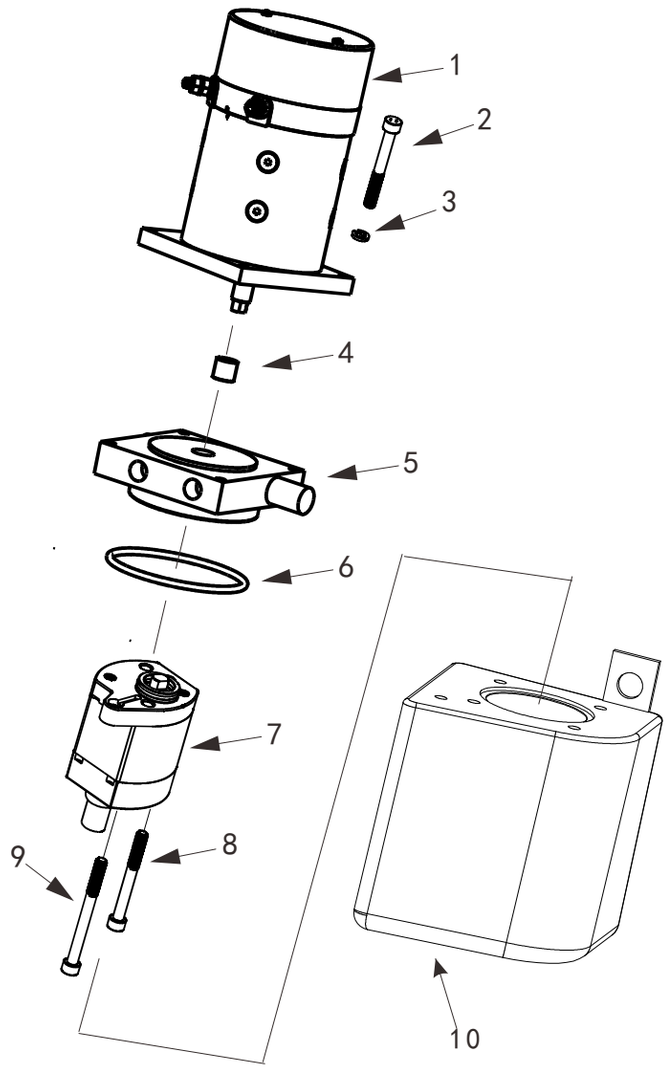

kupit-shtabeler.ru

## 图14/FIG.14 车架总成/FRAME

| 序号 Item No | 图 号 Part No | 零部件名称 Description | 件数 Q'ty | 备 注 Remark |
|---|---|---|---|---|
| 01 | 8500909001 | Plastic cover plate 电瓶箱盖 | 1 | |
| 02 | 8500732001 | Wheel 轮子 | 4 | |
| 03 | 8500704001 | Bearing 轴承 | 8 | |
| 04 | 8500735001 | Fixed plate 固定板 | 2 | |
| 05 | 8500735002 | Fixed plate 固定板 | 2 | |
| 06 | 5101337001 | Washer 垫圈 | 8 | |
| 07 | 8500713001 | Shaft 轴 | 4 | |
| 08 | 5101320002 | Bearing 自润滑轴承 | 4 | |
| 09 | 8500909002 | Panel 机架外壳 | 1 | |
| 10 | 8500702001 | Pulling plate 主板拉板 | 2 | |
| 11 | 8500702002 | Support plate 支撑板 | 2 | |
| 12 | 8500908002 | Middle panel 中间面板 | 1 | |
| 13 | 1801116001 | Key 电门锁 | 1 | |
| 14 | 2001116002 | Battery indicator 电量表 | 1 | |
| 15 | 2000407001 | Emergencystop button 紧急制动开关 | 1 | |
| 16 | 8500718001 | Dashboard 仪表盘 | 1 | |
| 17 | 8500718002 | Dashboard 仪表盘 | 1 | |
| 18 | 8500734001 | Rubber protective pads 橡胶防护垫 | 2 | |
| 19 | 8500735003 | Stainless steel plate 不锈钢固定板 | 2 | |
| 20 | 2000541003 | Screw 半圆头螺钉 | 8 | |

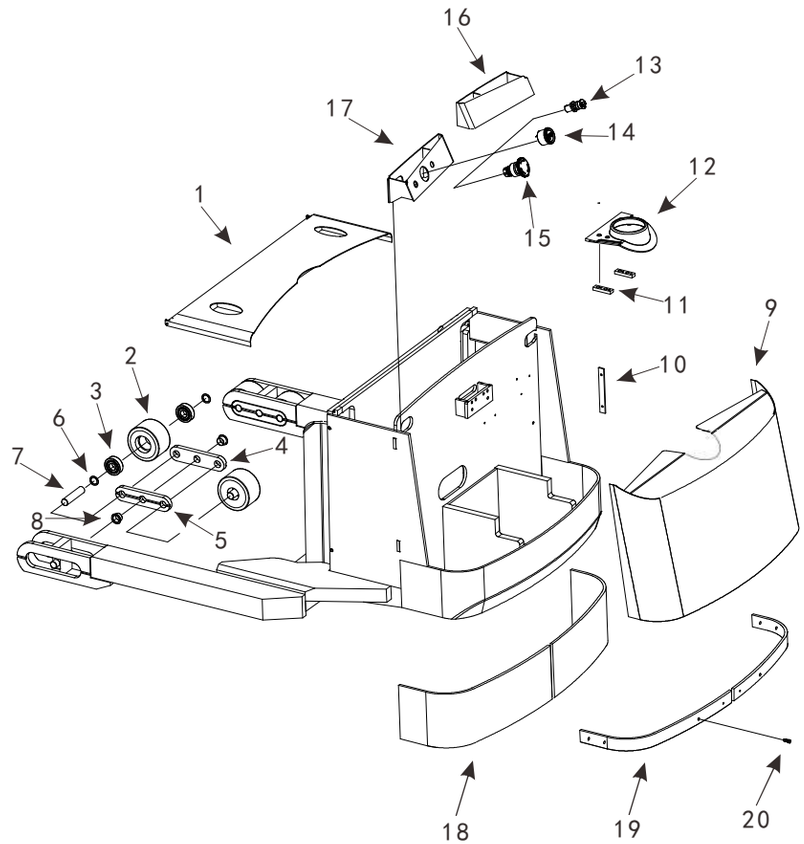

**Купить штабелёр**
kupit-shtabeler.ru +7 495 159-44-32 zakaz@kupit-shtabeler.ru
Справочная копия документа изготовителя. Масштаб исходных страниц сохранён.
kupit-shtabeler.ru

## 图15/FIG.15 车架总成/FRAME

| 序号 Item No | 图号 Part No | 零部件名称 Description | 件数 Q'ty | 备注 Remark |
|---|---|---|---|---|
| 01 | 8500909003 | Plastic cover plate 电瓶箱盖 | 1 | |
| 02 | 8500732001 | Wheel 轮子 | 4 | |
| 03 | 8500704001 | Bearing 轴承 | 8 | |
| 04 | 8500735001 | Fixed plate 固定板 | 2 | |
| 05 | 8500735002 | Fixed plate 固定板 | 2 | |
| 06 | 5101337001 | Washer 垫圈 | 8 | |
| 07 | 8500713001 | Shaft 轴 | 4 | |
| 08 | 5101320002 | Bearing 自润滑轴承 | 4 | |
| 09 | 8500909002 | Panel 机架外壳 | 1 | |
| 10 | 8500702001 | Pulling plate 主板拉板 | 2 | |
| 11 | 8500702002 | Support plate 支撑板 | 2 | |
| 12 | 8500908002 | Middle panel 中间面板 | 1 | |
| 13 | 1801116001 | Key 电门锁 | 1 | |
| 14 | 2001116002 | Battery indicator 电量表 | 1 | |
| 15 | 2000407001 | Emergencystop button 紧急制动开关 | 1 | |
| 16 | 8500718001 | Dashboard 仪表盘 | 1 | |
| 17 | 8500718002 | Dashboard 仪表盘 | 1 | |
| 18 | 5100717001 | Button assembly 按钮总成 | 2 | |
| 19 | 8500734001 | Rubber protective pads 橡胶防护垫 | 2 | |
| 20 | 8500735003 | Stainless steel plate 不锈钢固定板 | 2 | |
| 21 | 2000541003 | Screw 半圆头螺钉 | 8 | |

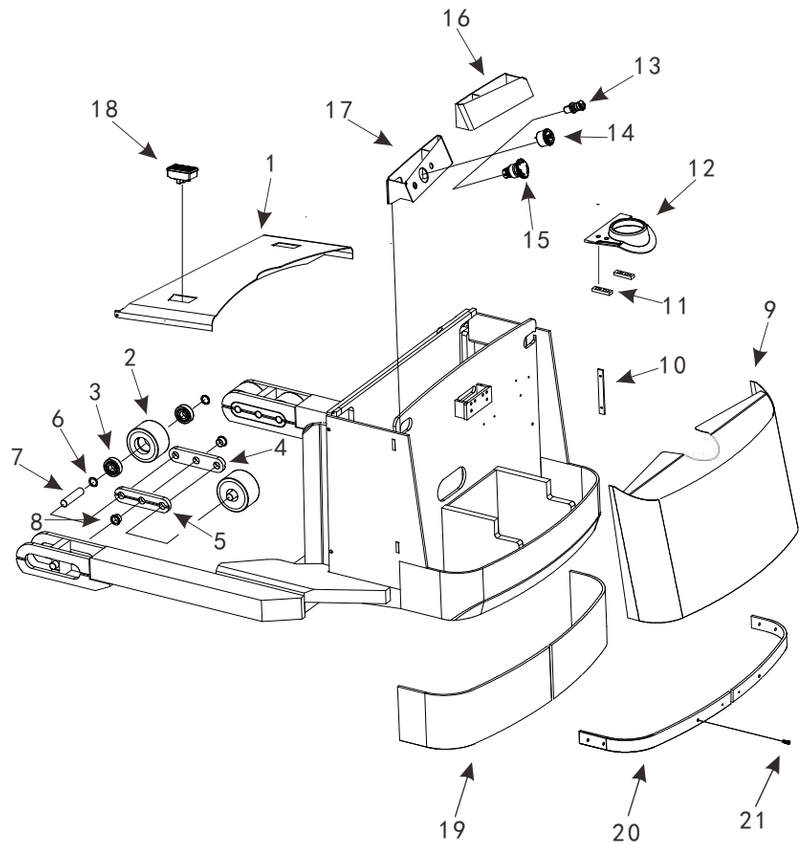


15

kupit-shtabeler.ru

## 图16/FIG.16 配电板总成/ELECTRIC PANEL ASSEMBLY

| 序号 Item No | 图号 Part No | 零部件名称 Description | 件数 Q'ty | 备注 Remark |
|---|---|---|---|---|
| 01 | 8500406001 | Controller 控制器 | 1 | |
| 02 | 8500406002 | Contactor 接触器 | 1 | |
| 03 | 4000831001 | Screw 螺栓 | 2 | |
| 04 | 1000407015 | Fuse 保险丝 | 1 | |
| 05 | 1800306001 | Contactor 接触器 | 1 | |
| 06 | 6000418004 | Install plate 安装板 | 1 | |
| 07 | 1000441006 | Screw 螺栓 | 4 | |
| 08 | 8500406003 | Controller 控制器 | 1 | |
| 09 | 8500418001 | Install plate 安装板 | 1 | |
| 10 | 7300400003 | Circuit board 电路板 | 1 | |
| 11 | 4000412001 | Washer 垫圈 | 4 | |
| 12 | 2001141005 | Screw 螺栓 | 4 | |
| 13 | 9701102001 | Seat 风扇安装座 | 1 | |
| 14 | 4900406001 | Fan 风扇 | 1 | |
| 15 | 6000131001 | Screw 螺栓 | 4 | |
| 16 | 4601102001 | Radiator 散热架 | 1 | |
| 17 | 7800400002 | 1230 Controller 1230控制器 | 1 | |
| 18 | 1000441006 | Screw 螺栓 | 4 | |
| 19 | 7800400003 | Controller 控制器 | 1 | |

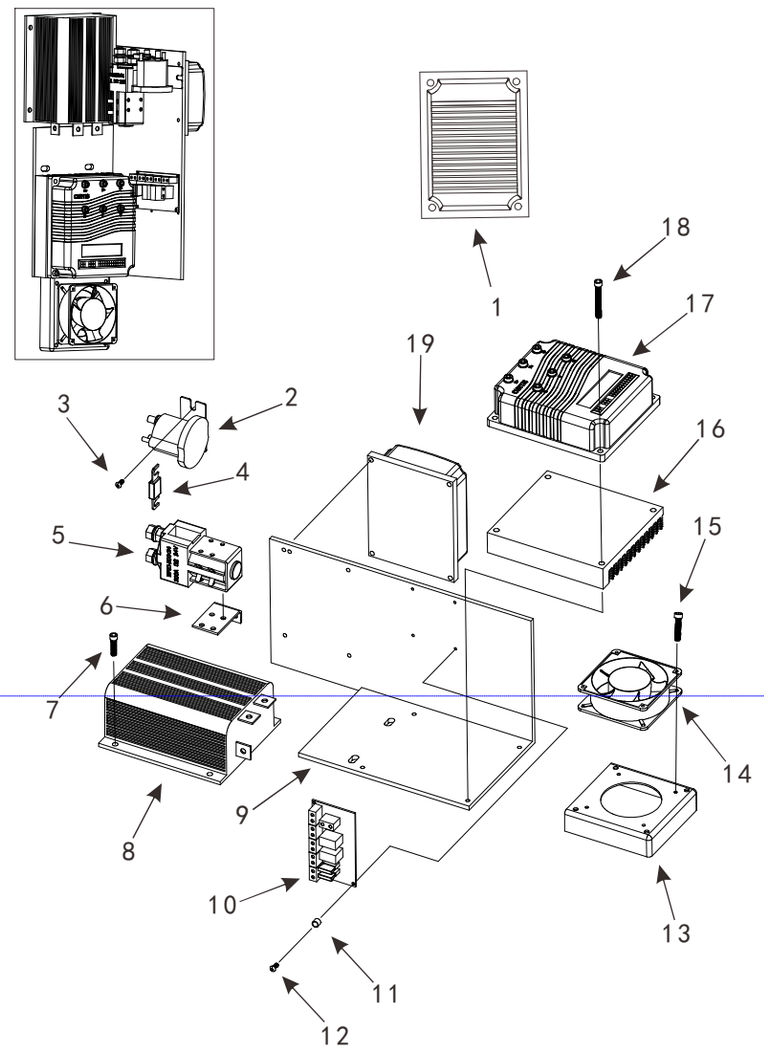

Купить штабелёр
kupit-shtabeler.ru +7 495 159-44-32 zakaz@kupit-shtabeler.ru
Справочная копия документа изготовителя. Масштаб исходных страниц сохранён.

## 图17/FIG.17 萨牌配电板总成/ZAPI ELECTRIC PANEL ASSEMBLY

| 序号 Item No | 图号 Part No | 零部件名称 Description | 件数 Q'ty | 备注 Remark |
|---|---|---|---|---|
| 01 | 8500400001 | ZAPI electric panel assembly 萨牌配电板总成 | 1 | |
| 02 | 8500418002 | Install plate 安装板 | 1 | |
| 03 | 0301031001 | Screw 螺钉 | 4 | |
| 04 | 8500400002 | Steering controller 转向控制器 | 1 | |
| 05 | 2000831001 | Screw 螺钉 | 1 | |
| 06 | 9300418002 | Install plate 安装板 | 2 | |
| 07 | 2000939001 | Nut 螺母 | 1 | |
| 08 | 9500411001 | Radiator 散热架 | 1 | |
| 09 | 9500407001 | ZAPI controller 萨牌控制器 | 1 | |
| 10 | 4600431001 | Screw 螺钉 | 4 | |
| 11 | 2000507006 | Horn 喇叭 | 1 | |
| 12 | 6000731001 | Screw 螺钉 | 5 | |
| 13 | 4000412001 | Spacer bush 隔套 | 4 | |
| 14 | 4000400025 | Circuit board 电路板 | 1 | |
| 15 | 1000406006 | Fuse 保险丝 | 2 | |
| 16 | 1001141001 | Screw 螺钉 | 4 | |
| 17 | 9300506001 | Fuse 保险丝 | 1 | |
| 18 | 4000831001 | Screw 螺钉 | 2 | |
| 19 | 1000435004 | Fuse seat 保险丝座 | 1 | |
| 20 | 8500406002 | Contactor 接触器 | 1 | |
| 21 | 07G0431001 | Screw 螺钉 | 4 | |
| 22 | 6000418004 | Install plate 安装板 | 1 | |
| 23 | 1800306001 | Contactor 接触器 | 1 | |
| 24 | 8500406004 | Fuse 保险丝 | 1 | |
| 25 | 8500406003 | Controller 控制器 | 1 | |

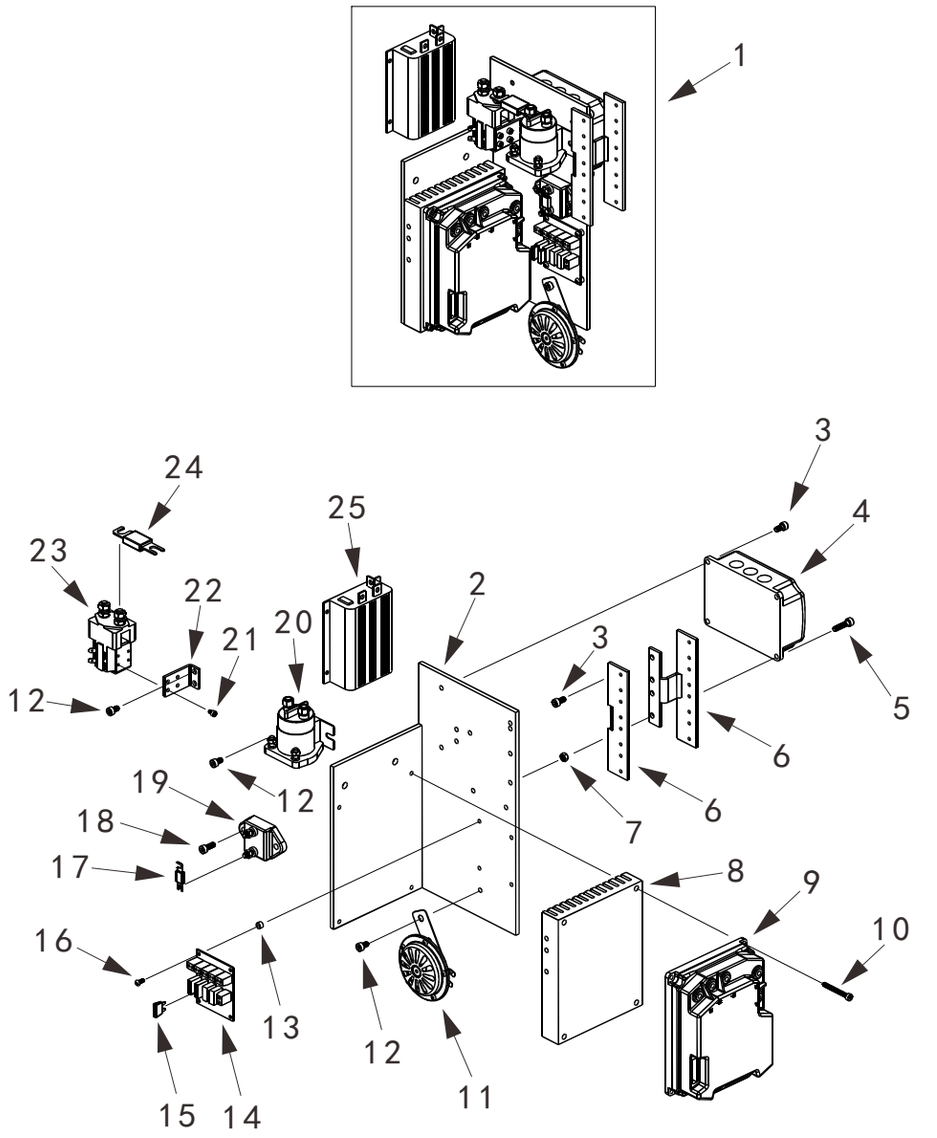


17

kupit-shtabeler.ru

## 图18/FIG.18 外门架组件/MAST ASSY-OUTER

| 序号 Item No | 图号 Part No | 零部件名称 Description | 件数 Q'ty | 备注 Remark |
|---|---|---|---|---|
| 01 | 8500818001 | Limitation switch socket 限位开关座 | 2 | |
| 02 | 0300407001 | Limitation switch 起升限位接近开关 | 2 | |
| 03 | 1000441006 | Screw 螺栓 | 4 | |
| 04 | 8500832003 | Mast roller 门架滚轮 | 2 | |
| 05 | 8500832002 | Mast roller 滚轮 | 2 | |
| 06 | 8500813007 | Shaft 侧滚轮轴 | 2 | |
| 07 | 8500820001 | Bearing 复合轴承 | 2 | |
| 08 | 8500835001 | Mounting base 侧滚轮座 | 2 | |
| 09 | 8500839003 | Nut 六角螺母 | 2 | |
| 10 | 8500813006 | Joint 链条端接头 | 2 | |
| 11 | 8500833001 | Pin 销轴 | 2 | |
| 12 | 1000239001 | Nut 六角薄螺母 | 2 | |
| 13 | 8500838001 | Screw 调整螺钉 | 2 | |
| 14 | 8500835002 | Fastening nip 油缸固定夹 | 2 | |
| 15 | 4000231002 | Screw 螺栓 | 4 | |
| 16 | 8500802008 | Roundabout device 绕弯器 | 1 | |
| 17 | 8500803001 | Cylinder assembly(4.5m) 油缸总成(4.5m) | 2 | |
| | 8500803002 | Cylinder assembly(5.0m) 油缸总成(5.0m) | 2 | |
| | 8500803003 | Cylinder assembly(4.0m) 油缸总成(4.0m) | 2 | |
| 18 | 8500831001 | Screw 螺栓 | 8 | |
| 19 | 8500603004 | Valve plate 阀板 | 1 | |
| 20 | 8700615004 | Joint 接头 | 2 | |
| 21 | 5500834001 | Protecting net 保护网 | 1 | |
| 22 | 2001141004 | Screw 螺栓 | 6 | |
| 23 | 8500834002 | Circlip 弹簧垫圈 | 6 | |
| 24 | 8500837001 | Washer 垫圈 | 6 | |
| 25 | 8500603005 | Oil distributing plate 分油板 | 1 | |
| 26 | 8500603006 | Joint 接头 | 1 | |
| 27 | 8500614021 | Hard oil pipe 硬油管 | 2 | |
| 28 | 8500603018 | Joint 接头 | 2 | |

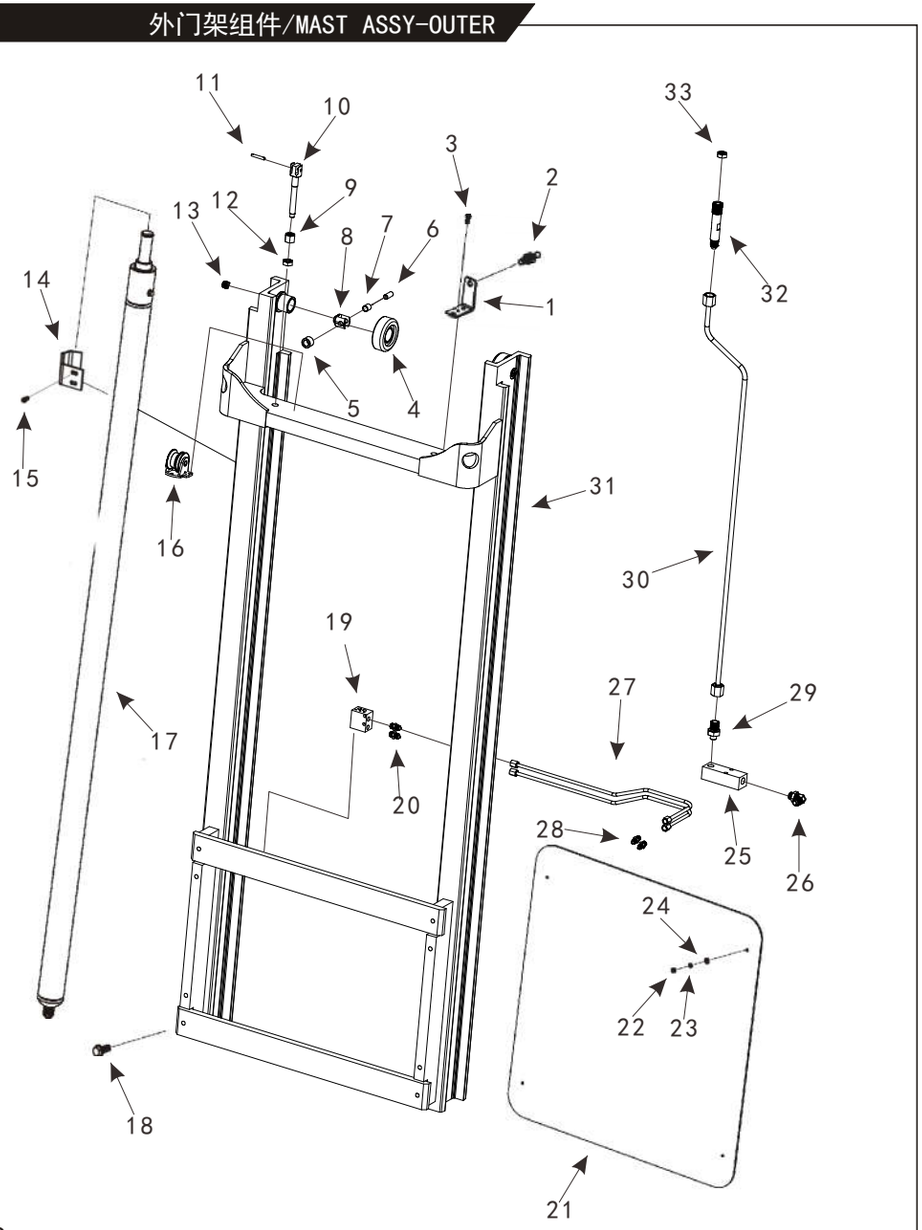

kupit-shtabeler.ru

## 图18/FIG.18 外门架组件/MAST ASSY-OUTER

| 序号 Item No | 图 号 Part No | 零部件名称 Description | 件数 Q'ty | 备 注 Remark |
|---|---|---|---|---|
| 29 | 2000603024 | Joint 接头 | 1 | |
| 30 | 8500614006 | Hard oil pipe（4.5m） 硬油管（4.5m） | 1 | |
| | 8500614025 | Hard oil pipe（5.0m） 硬油管（5.0m） | 1 | |
| | 8500614026 | Hard oil pipe（4.0m） 硬油管（4.0m） | 1 | |
| 31 | 8500824006 | Mast frame 门架 | 1 | |
| 32 | 8500603019 | Joint 油通接头 | 1 | |
| 33 | 4300639001 | Nut 螺母 | 1 | |

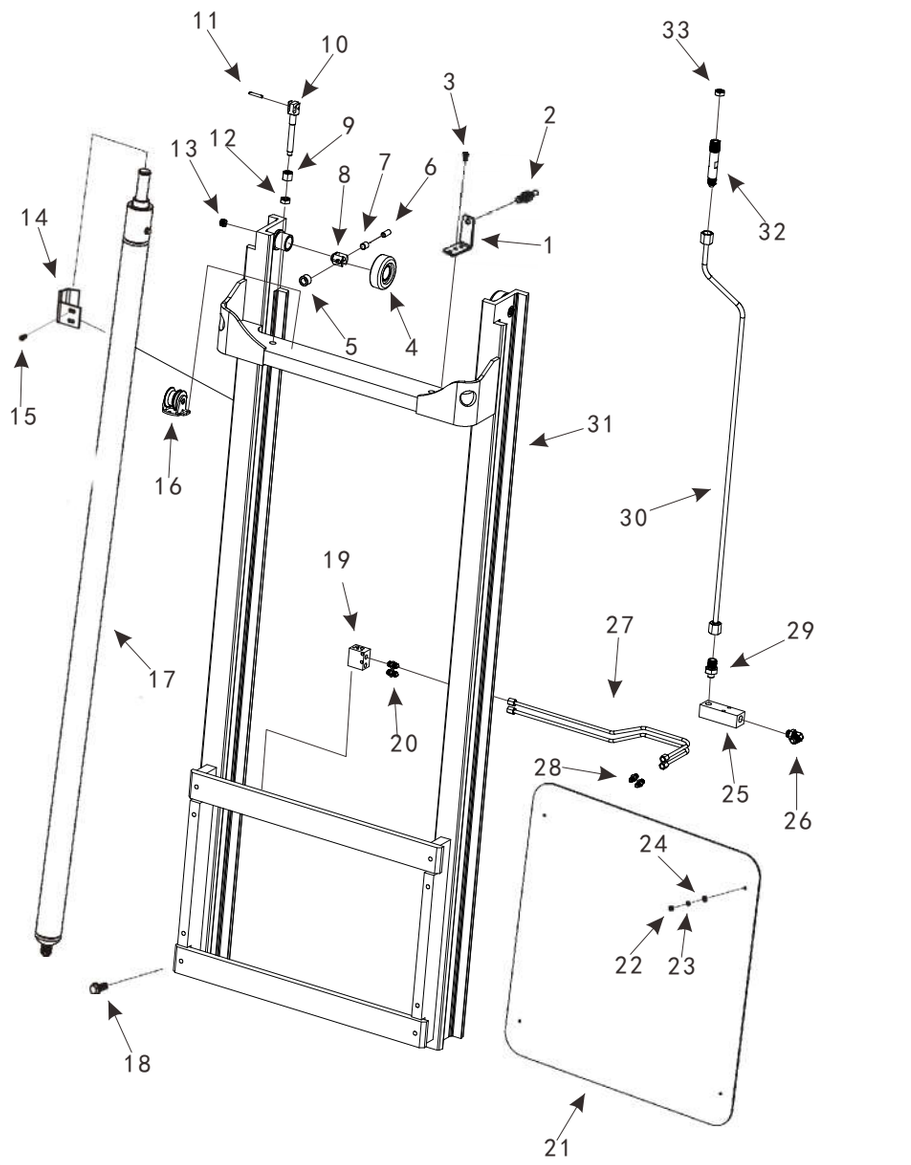


19

kupit-shtabeler.ru

## 图19/FIG.19 中门架组件/MAST ASSY-MIDDLE

| 序号 Item No | 图 号 Part No | 零部件名称 Description | 件数 Q'ty | 备 注 Remark |
|---|---|---|---|---|
| 01 | 2800804001 | Lifting chain 板式链 | 2 | |
| 02 | 8600832001 | Chain wheel 链条滚轮 | 2 | |
| 03 | 8500614007 | Soft oil pipe(4.5m) 软油管(4.5m) | 1 | |
| | 8500614027 | Soft oil pipe(5.0m) 软油管(5.0m) | 1 | |
| | 8500614028 | Soft oil pipe(4.0m) 软油管(4.0m) | 1 | |
| 04 | 8500832004 | Wheel 滚轮 | 1 | |
| 05 | 8500804003 | Bearing 轴承 | 4 | |
| 06 | 8500804002 | Snapring 挡圈 | 2 | |
| 07 | 8500824007 | Mast frame 门架 | 1 | |
| 08 | 8500804005 | Bearing 轴承 | 1 | |
| 09 | 8500814003 | Wheel 滚轮 | 1 | |
| 10 | 8500814009 | Wheel 滚轮 | 1 | |
| 11 | 8500814011 | Wheel 滚轮 | 1 | |
| 12 | 8500614008 | Soft oil pipe(4.5m) 软油管(4.5m) | 1 | |
| | 8500614029 | Soft oil pipe(5.0m) 软油管(5.0m) | 1 | |
| | 8500614030 | Soft oil pipe(4.0m) 软油管(4.0m) | 1 | |
| 13 | 8500838001 | Screw 调整螺钉 | 4 | |
| 14 | 8500813007 | Shaft 侧滚轮轴 | 4 | |
| 15 | 8500820001 | Bearing 复合轴承 | 4 | |
| 16 | 8500832003 | Mast roller 门架滚轮 | 4 | |
| 17 | 8500835001 | Mounting base 侧滚轮座 | 4 | |
| 18 | 8500832002 | Mast roller 滚轮 | 4 | |

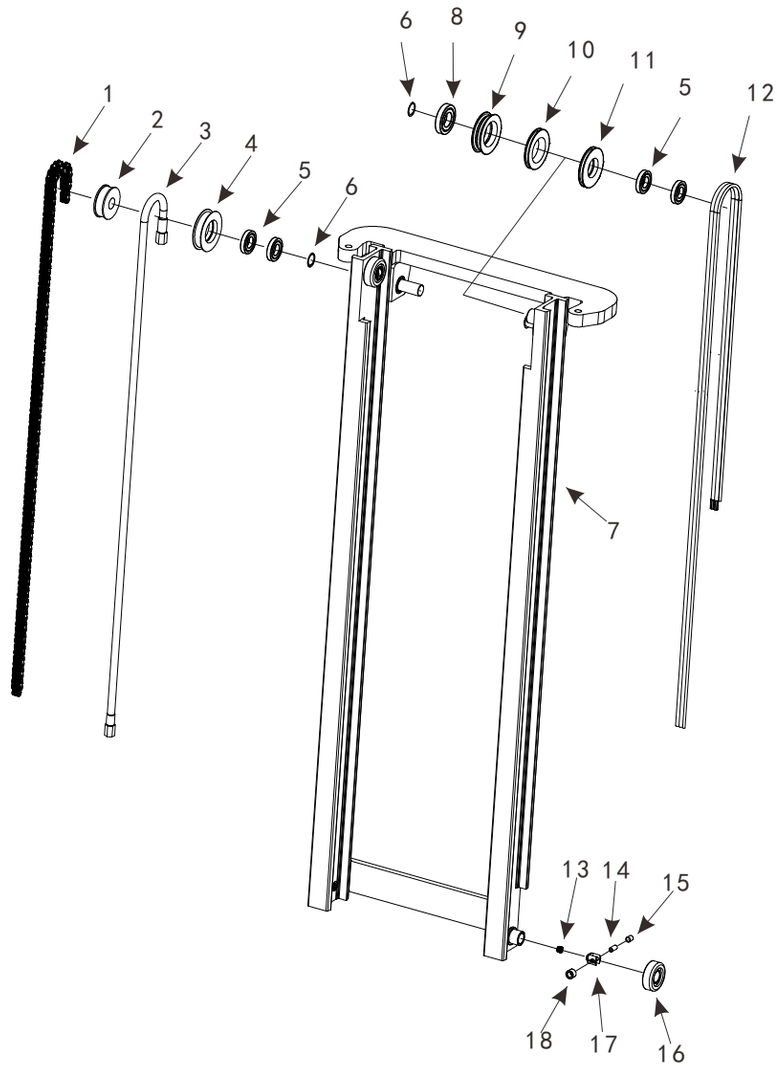

kupit-shtabeler.ru

## 图20/FIG.20 油缸总成/CYLINDER ASSEMBLY

| 序号 Item No | 图号 Part No | 零部件名称 Description | 件数 Q'ty | 备注 Remark |
|---|---|---|---|---|
| 01 | | Dust ring Da17型 防尘圈45x53x6/9 | 1 | |
| 02 | | Seal washer 密封圈45x55x7 | 1 | |

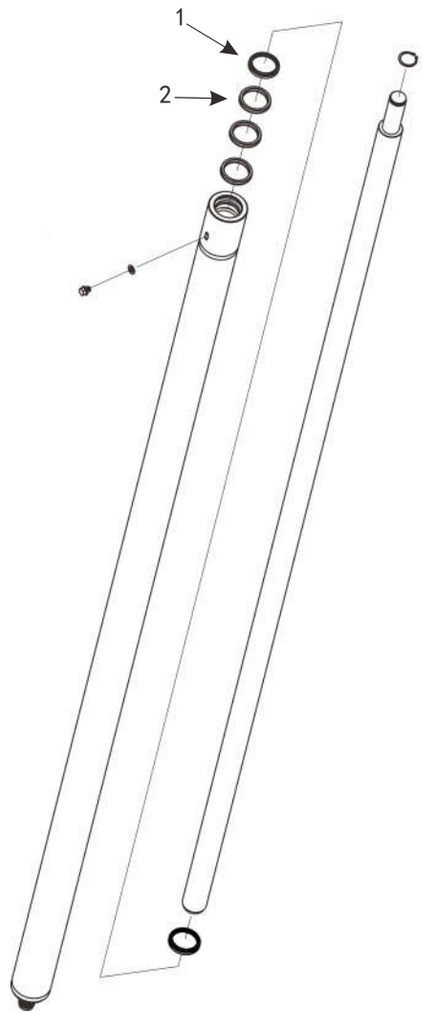

Купить штабелёр
kupit-shtabeler.ru +7 495 159-44-32 zakaz@kupit-shtabeler.ru
Справочная копия документа изготовителя. Масштаб исходных страниц сохранён.

## 图21/FIG.21 内门架组件/MAST ASSY-INNER

| 序号 Item No | 图号 Part No | 零部件名称 Description | 件数 Q'ty | 备注 Remark |
|---|---|---|---|---|
| 01 | 8500804002 | Snapring 挡圈 | 2 | |
| 02 | 8500804005 | Bearing 轴承 | 1 | |
| 03 | 8500832005 | Wheel 油管滚轮 | 1 | |
| 04 | 8500832009 | Wheel 油管滚轮 | 1 | |
| 05 | 8500832010 | Wheel 油管滚轮 | 1 | |
| 06 | 8500804003 | Bearing 轴承 | 2 | |
| 07 | 8500614022 | Soft oil pipe(4.5m) 软油管 (4.5m) | 1 | |
| | 8500614023 | Soft oil pipe(5.0m) 软油管 (5.0m) | 1 | |
| | 8500614024 | Soft oil pipe(4.0m) 软油管 (4.0m) | 1 | |
| 08 | 8500832006 | Chain wheel 链条滚轮 | 1 | |
| 09 | 8500804004 | Lifting chain 板式链 | 1 | |
| 10 | 8500802001 | Oil cylinder cap seat 油缸顶座 | 1 | |
| 11 | 8500813011 | Chain wheel shaft 滚轮轴 | 1 | |
| 12 | 8500813006 | Joint 链条端接头 | 2 | |
| 13 | 2000742001 | Screw 螺栓 | 1 | |
| 14 | 8600833001 | Connecting pin 链条连接销 | 2 | |
| 15 | 8500634001 | Platen 压板 | 2 | |
| 16 | 8500603008 | Oil distributing plate 分油板 | 1 | |
| 17 | 8500614005 | Oil pipe 油管 | 1 | |
| 18 | 8500603004 | Valve plate 阀板 | 1 | |
| 19 | 8700615004 | Joint 接头 | 2 | |
| 20 | 8500614004 | Oil pipe 油管 | 1 | |
| 21 | 8500600006 | Middle cylinder(4.5m) 油缸 (4.5m) | 1 | |
| | 8500600004 | Middle cylinder(5.0m) 油缸 (5.0m) | 1 | |
| | 8500600005 | Middle cylinder(4.0m) 油缸 (4.0m) | 1 | |
| 22 | 8500614031 | Soft oil pipe 硬油管 | 1 | |
| 23 | 8500603020 | Joint 接头 | 1 | |
| 24 | 8500832013 | Roundabout roller 绕弯滚轮 | 4 | |
| 25 | 8500838001 | Screw 调整螺钉 | 2 | |
| 26 | 8500832002 | Mast roller 滚轮 | 2 | |

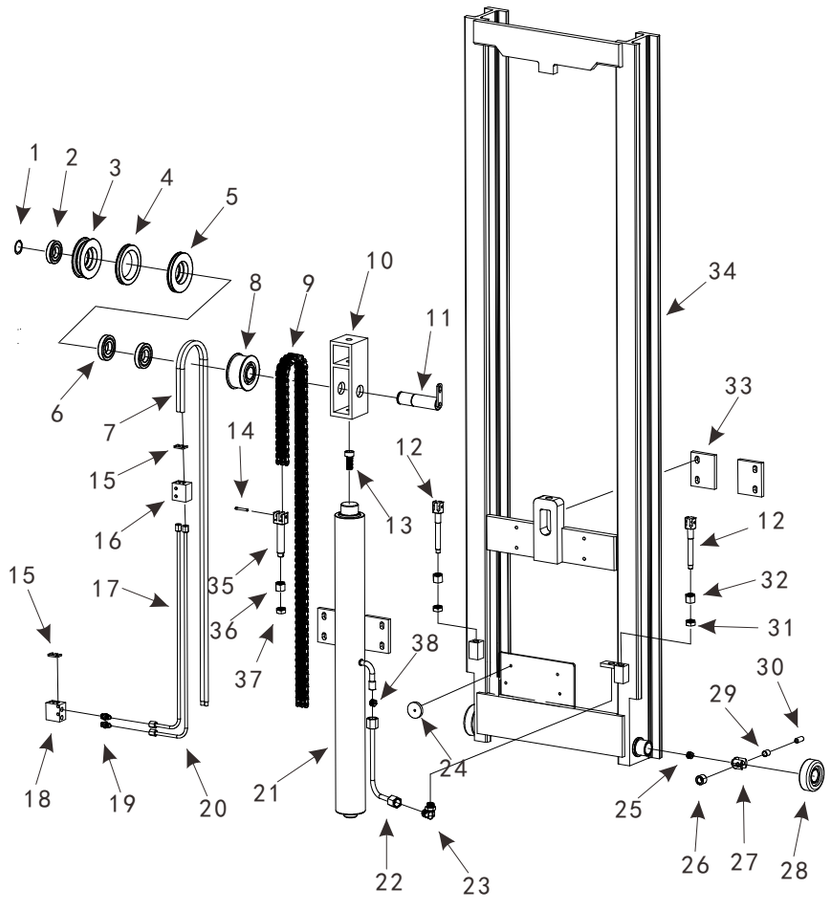

**Купить штабелёр**
kupit-shtabeler.ru +7 495 159-44-32 zakaz@kupit-shtabeler.ru
Справочная копия документа изготовителя. Масштаб исходных страниц сохранён.

## 图21/FIG.21 内门架组件/MAST ASSY-INNER

| 序号 Item No | 图号 Part No | 零部件名称 Description | 件数 Q'ty | 备注 Remark |
|---|---|---|---|---|
| 27 | 8500835001 | Mounting base 侧滚轮座 | 2 | |
| 28 | 8500832003 | Mast roller 门架滚轮 | 2 | |
| 29 | 8500820001 | Bearing 复合轴承 | 2 | |
| 30 | 8500813007 | Shaft 侧滚轮轴 | 2 | |
| 31 | 1000239001 | Nut 六角薄螺母 | 4 | |
| 32 | 8500839003 | Nut 六角螺母 | 4 | |
| 33 | 8500634002 | Base plate 垫板 | 2 | |
| 34 | 8500824008 | Mast frame 门架 | 1 | |
| 35 | 8600813001 | Joint 链条端接头 | 2 | |
| 36 | 8600839001 | Nut 六角螺母 | 2 | |
| 37 | 8600839002 | Nut 六角薄螺母 | 2 | |
| 38 | 9300603008 | Explosion-proof valve 防爆阀 | 1 | |

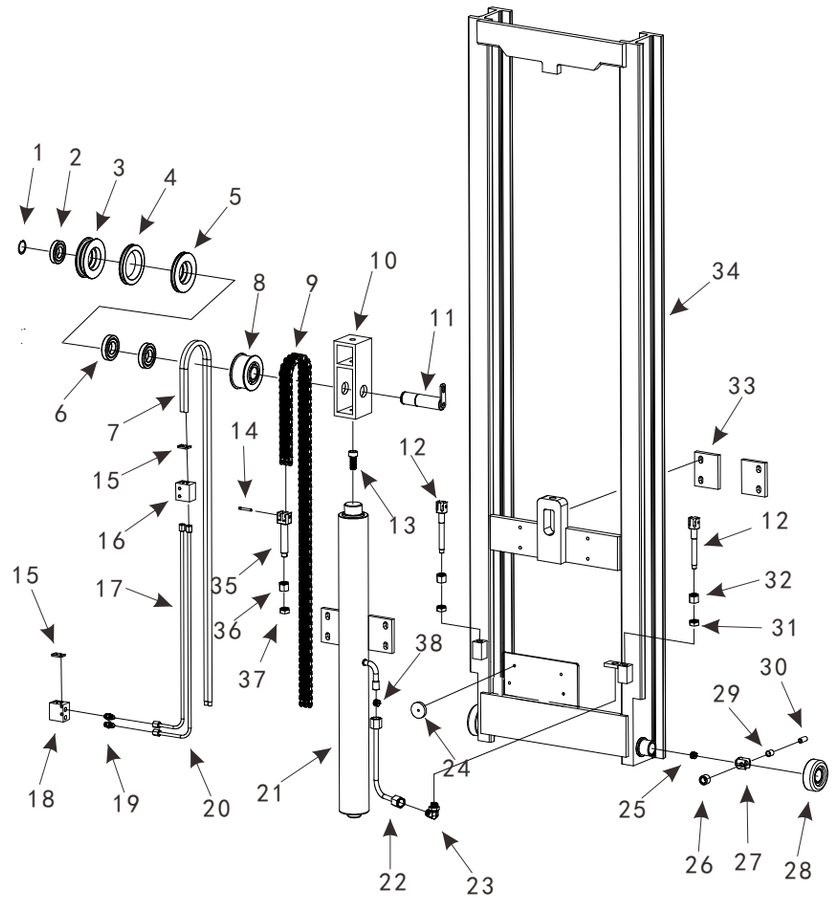

kupit-shtabeler.ru

## 图22/FIG.22 中间油缸总成/MIDDLE CYLINDER ASSEMBLY

| 序号 Item No | 图 号 Part No | 零部件名称 Description | 件数 Q'ty | 备 注 Remark |
|---|---|---|---|---|
| 01 | | Dust ring 防尘圈65x73x5x6.5 | 1 | |
| 02 | | Seal washer 密封圈65x75x6 | 1 | |

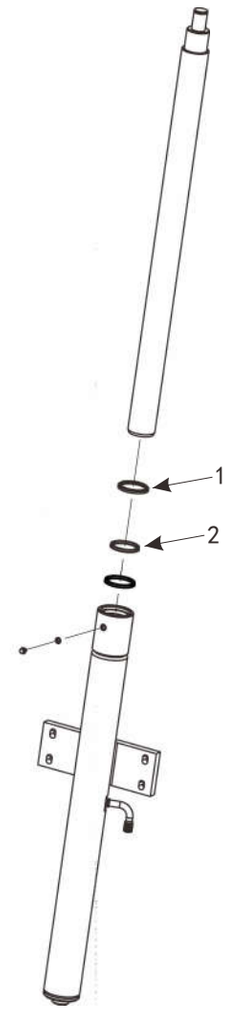

Купить штабелёр
kupit-shtabeler.ru +7 495 159-44-32 zakaz@kupit-shtabeler.ru
Справочная копия документа изготовителя. Масштаб исходных страниц сохранён.

## 图23/FIG.23 起升架总成/MAST FRAME ASSEMBLY

| 序号 Item No | 图号 Part No | 零部件名称 Description | 件数 Q'ty | 备注 Remark |
|---|---|---|---|---|
| 01 | 8500832012 | Wheel 油管滚轮 | 1 | |
| 02 | 8500839002 | Nut 滚轮螺母 | 1 | |
| 03 | 8500834001 | Dust ring 防尘圈 | 2 | |
| 04 | 8500820002 | Bearing 轴承 | 2 | |
| 05 | 8500828001 | O-ring 0型圈 | 2 | |
| 06 | 8500813004 | Shaft 轴 | 1 | |
| 07 | 8500614010 | Hard oil pipe 硬油管 | 1 | |
| 08 | 8500603013 | Joint 接头 | 2 | |
| 09 | 8500603014 | Joint 接头 | 2 | |
| 10 | 8500603011 | Joint 接头 | 2 | |
| 11 | 8500603003 | Valve plate 阀板 | 1 | |
| 12 | 4600615001 | Solenoid coil 电磁线圈 | 2 | |
| 13 | 9700603003 | Joint 接头 | 2 | |
| 14 | 8500614011 | Hard oil pipe 硬油管 | 1 | |
| 15 | 8500839004 | Nut 螺母 | 1 | |
| 16 | 8500813005 | Shaft 轴 | 1 | |
| 17 | 8600813001 | Joint 链条端接头 | 1 | |
| 18 | 8600839001 | Nut 六角螺母 | 1 | |
| 19 | 8600839002 | Nut 六角薄螺母 | 1 | |
| 20 | 8500603021 | Valve plate 阀板 | 1 | |
| 21 | 8500634001 | Platen 压板 | 2 | |
| 22 | 8500824003 | Mast frame 剪叉起升架 | 1 | |
| 23 | 8500838001 | Screw 调整螺钉 | 6 | |
| 24 | 8500820001 | Bearing 复合轴承 | 6 | |
| 25 | 8500813007 | Shaft 侧滚轮轴 | 6 | |
| 26 | 8500832002 | Mast roller 滚轮 | 6 | |
| 27 | 8500835001 | Mounting base 侧滚轮座 | 6 | |
| 28 | 8500832003 | Mast roller 门架滚轮 | 6 | |
| 29 | 8500603012 | Valve plate 阀板 | 1 | |
| 30 | 8500614032 | Soft oil pipe 软油管 | 1 | |

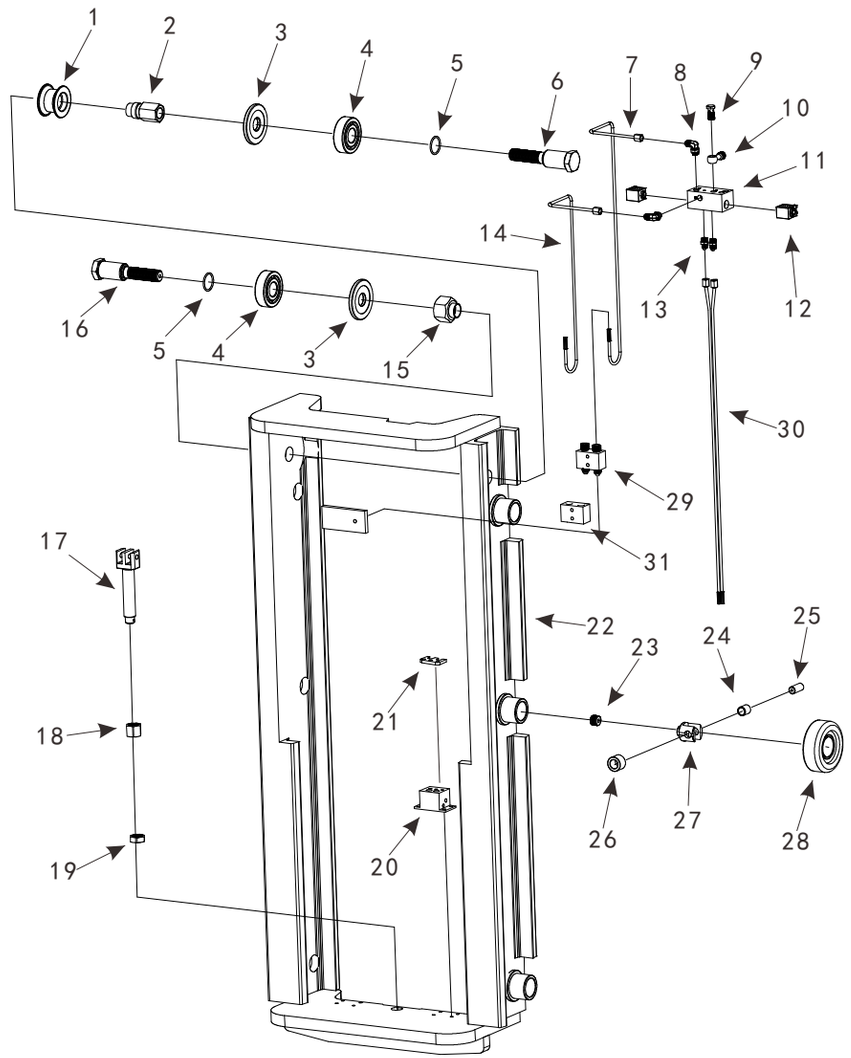


25

kupit-shtabeler.ru

## 图23/FIG.23 起升架总成/MAST FRAME ASSEMBLY

| 序号 Item No | 图 号 Part No | 零部件名称 Description | 件数 Q'ty | 备 注 Remark |
|---|---|---|---|---|
| 31 | 8500834003 | Block 垫块 | 1 | |

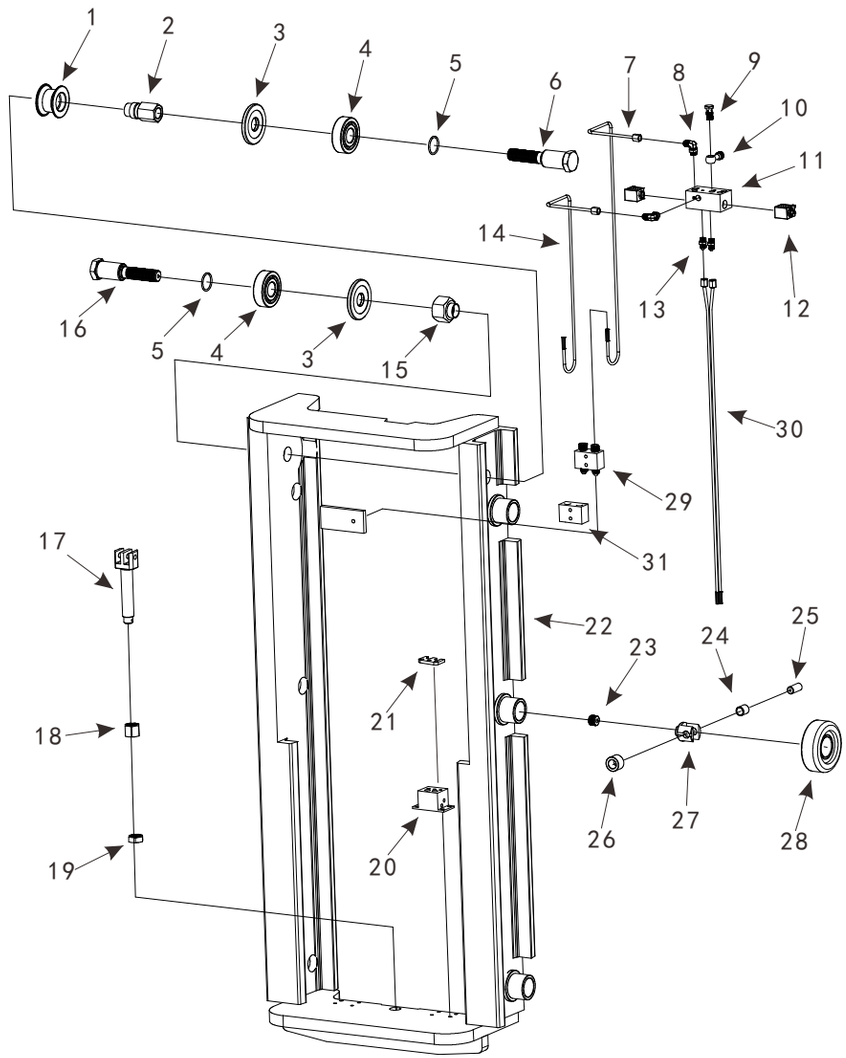

Купить штабелёр
kupit-shtabeler.ru +7 495 159-44-32 zakaz@kupit-shtabeler.ru
Справочная копия документа изготовителя. Масштаб исходных страниц сохранён.

## 图24/FIG.24 剪叉架总成/SHEAR FORK ASSEMBLY

| 序号 Item No | 图号 Part No | 零部件名称 Description | 件数 Q'ty | 备注 Remark |
|---|---|---|---|---|
| 01 | 8500813001 | Shaft 轴 | 1 | |
| 02 | 8500828001 | O-ring 0型圈 | 2 | |
| 03 | 8500820002 | Bearing 轴承 | 2 | |
| 04 | 8500834001 | Dust ring 防尘圈 | 2 | |
| 05 | 8500839004 | Nut 螺母 | 1 | |
| 06 | 8500839001 | Nut 滚轮螺母 | 1 | |
| 07 | 8500832001 | Wheel 油管滚轮 | 1 | |
| 08 | 8500813008 | Shaft 轴 | 1 | |
| 09 | 8700827001 | Snapring 挡圈 | 2 | |
| 10 | 8500813010 | Shaft 轴 | 1 | |
| 11 | 8500824004 | Theshear fork 内剪叉 | 1 | |
| 12 | 8500824005 | Theshear fork 外剪叉 | 1 | |
| 13 | 8500813015 | Shaft 轴 | 1 | |
| 14 | 8500614001 | Soft oil pipe 软油管 | 1 | |
| 15 | 8500614003 | Soft oil pipe 软油管 | 1 | |
| 16 | 8500603014 | Joint 接头 | 2 | |
| 17 | 8500614002 | Soft oil pipe 软油管 | 1 | |
| 18 | 9700603004 | Joint 接头 | 1 | |
| 19 | 8500600001 | Cylinder assembly 油缸总成 | 1 | |
| 20 | 2000820001 | Mast roller 门架滚轮 | 2 | |
| 21 | 8500800001 | Aircylinder 气缸 | 1 | |

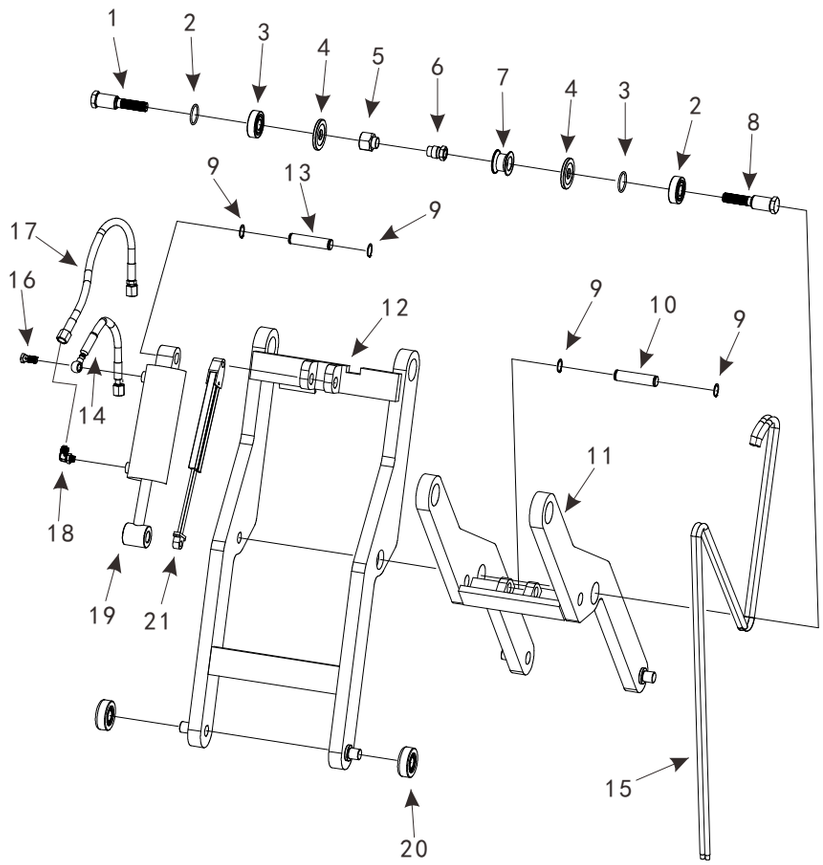

Купить штабелёр
kupit-shtabeler.ru +7 495 159-44-32 zakaz@kupit-shtabeler.ru
Справочная копия документа изготовителя. Масштаб исходных страниц сохранён.

## 图25/FIG.25 叉架和挡货架/FORK&CARRIAGE&BACKREST

| 序号 Item No | 图号 Part No | 零部件名称 Description | 件数 Q'ty | 备注 Remark |
|---|---|---|---|---|
| 01 | 8500813003 | Shaft 轴 | 1 | |
| 02 | 8500828001 | O-ring 0型圈 | 2 | |
| 03 | 8500820002 | Bearing 轴承 | 2 | |
| 04 | 8500834001 | Dust ring 防尘圈 | 2 | |
| 05 | 8500839004 | Nut 螺母 | 1 | |
| 06 | 8500824001 | Mast frame 剪叉前移架 | 1 | |
| 07 | 8500839001 | Nut 滚轮螺母 | 1 | |
| 08 | 8500832012 | Wheel 油管滚轮 | 1 | |
| 09 | 8500813009 | Shaft 轴 | 1 | |
| 10 | 2001318001 | Backrest 挡货架 | 1 | |
| 11 | 2000830002 | Bolt 外六角螺钉 | 4 | |
| 12 | 8500813002 | shaft 轴 | 2 | |
| 13 | 8700820001 | Axletree 复合轴承 | 4 | |
| 14 | 8700827001 | Snapring 挡圈 | 4 | |
| 15 | 8500824002 | Carriage 移动货叉架 | 1 | |
| 16 | 2001302002 | Fork 铲叉 | 2 | |
| 17 | 5100603002 | Joint 接头 | 2 | |
| 18 | 8500814001 | Soft oil pipe 软油管 | 1 | |
| 19 | 8500814002 | Soft oil pipe 软油管 | 1 | |
| 20 | 9700603003 | Joint 接头 | 2 | |
| 21 | 8500600002 | Incline cylinder assembly 倾斜油缸总成 | 1 | |
| 22 | 8500603001 | Valve plate 阀板 | 1 | |

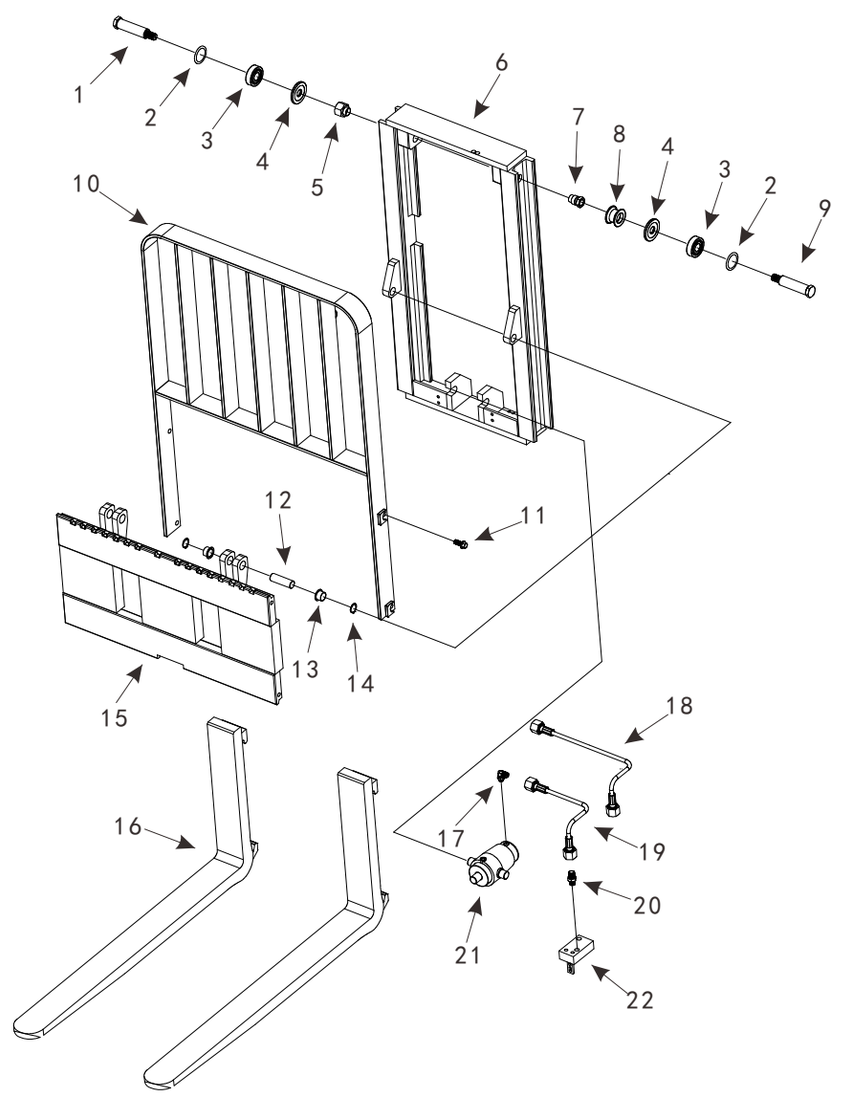

kupit-shtabeler.ru

## 图26/FIG.26 叉架和挡货架（侧移）/FORK&CARRIAGE&BACKREST(SIDESWAY)

| 序号 Item No | 图 号 Part No | 零部件名称 Description | 件数 Q'ty | 备 注 Remark |
|---|---|---|---|---|
| 01 | 8500813009 | Shaft 轴 | 1 | |
| 02 | 8500828001 | O-ring 0型圈 | 2 | |
| 03 | 8500820002 | Bearing 轴承 | 2 | |
| 04 | 8500834001 | Dust ring 防尘圈 | 2 | |
| 05 | 8500839004 | Nut 螺母 | 1 | |
| 06 | 8500824009 | Mast frame 剪叉前移架 | 1 | |
| 07 | 8500839001 | Nut 滚轮螺母 | 1 | |
| 08 | 8500832012 | Wheel 油管滚轮 | 1 | |
| 09 | 8500813003 | Shaft 轴 | 1 | |
| 10 | 2001318001 | Backrest 挡货架 | 1 | |
| 11 | 2000830002 | Bolt 外六角螺钉 | 4 | |
| 12 | 8500813012 | Guide pillar 导柱 | 1 | |
| 13 | 8500802002 | Platen 压板 | 2 | |
| 14 | 8500831001 | Screw 螺栓 | 2 | |
| 15 | 8501313001 | Shaft 轴 | 2 | |
| 16 | 8500603014 | Joint 接头 | 4 | |
| 17 | 8500614018 | Soft oil pipe 软油管 | 2 | |
| 18 | 8500600008 | Incline cylinder assembly 侧移油缸总成 | 1 | |
| 19 | 8500614035 | Soft oil pipe 软油管 | 1 | |
| 20 | 9700603003 | Joint 接头 | 4 | |
| 21 | 8501300001 | Carriage 移动货叉架 | 1 | |
| 22 | 2001302002 | Fork 铲叉 | 2 | |
| 23 | 8600603001 | Joint 接头 | 2 | |
| 24 | 8500603017 | Valve plate 阀板 | 1 | |
| 25 | 8500614019 | Hard oil pipe 硬油管 | 1 | |
| 26 | 4900603006 | Joint 接头 | 2 | |
| 27 | 8501313002 | shaft 轴 | 2 | |
| 28 | 8500614020 | Hard oil pipe 硬油管 | 1 | |
| 29 | 8501302001 | Air cylinder 气缸 | 1 | |

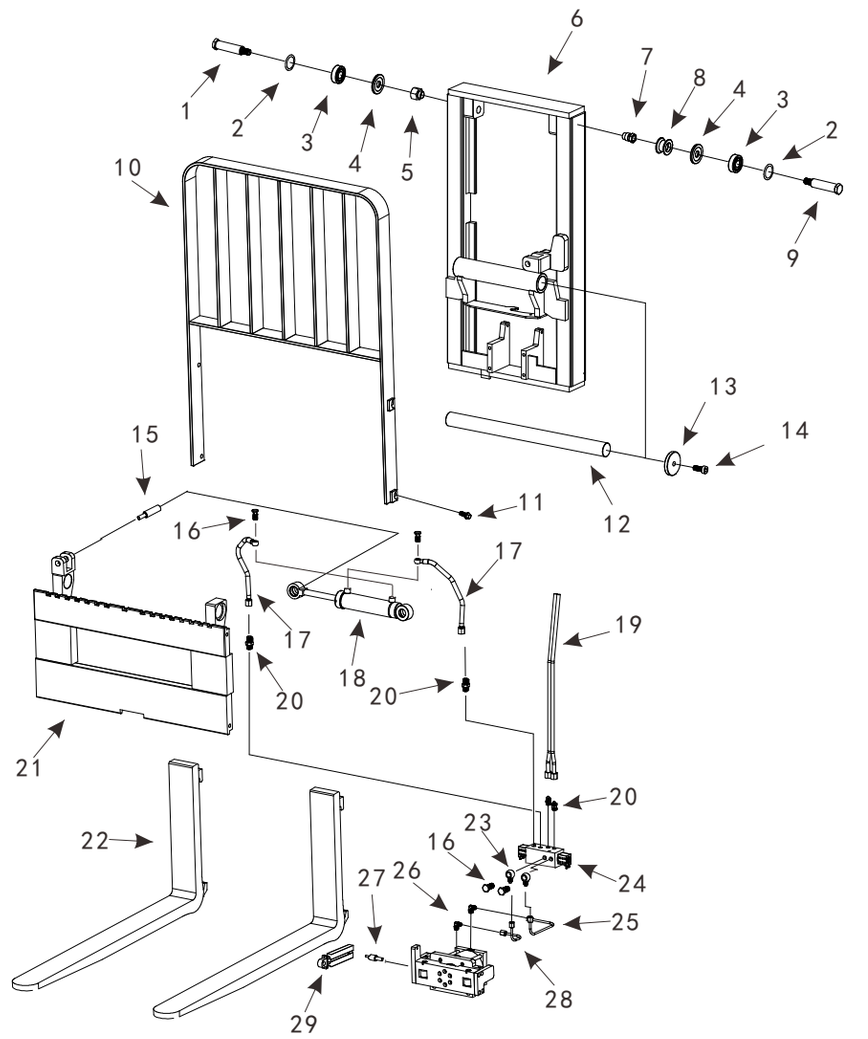


29

kupit-shtabeler.ru

## 图27/FIG.27 叉架和挡货架（侧移）/FORK&CARRIAGE&BACKREST(SIDESWAY)

| 序号 Item No | 图 号 Part No | 零部件名称 Description | 件数 Q'ty | 备 注 Remark |
|---|---|---|---|---|
| 01 | 8500813009 | Shaft 轴 | 1 | |
| 02 | 8500828001 | O-ring 0型圈 | 2 | |
| 03 | 8500820002 | Bearing 轴承 | 2 | |
| 04 | 8500834001 | Dust ring 防尘圈 | 2 | |
| 05 | 8500839004 | Nut 螺母 | 1 | |
| 06 | 8500802009 | Mast frame 剪叉前移架 | 1 | |
| 07 | 8500839001 | Nut 滚轮螺母 | 1 | |
| 08 | 8500832012 | Wheel 油管滚轮 | 1 | |
| 09 | 8500813003 | Shaft 轴 | 1 | |
| 10 | 8501318001 | Backrest 挡货架 | 1 | |
| 11 | 8500827001 | Link 油缸连接环 | 2 | |
| 12 | 8500827002 | Washer 油缸垫圈 | 2 | |
| 13 | 8600600001 | Incline cylinder assembly 侧移油缸总成 | 1 | |
| 14 | 8500831001 | Screw 螺栓 | 2 | |
| 15 | 8100603034 | Joint 接头 | 2 | |
| 16 | 2000830002 | Bolt 外六角螺钉 | 4 | |
| 17 | 8500614033 | Hard oil pipe 硬油管 | 1 | |
| 18 | 8500614034 | Hard oil pipe 硬油管 | 1 | |
| 19 | 9700603003 | Joint 接头 | 2 | |
| 20 | 8500614035 | Soft oil pipe 软油管 | 1 | |
| 21 | 8500603017 | Valve plate 阀板 | 1 | |
| 22 | 8500603014 | Joint 接头 | 2 | |
| 23 | 8600603001 | Joint 接头 | 2 | |
| 24 | 8500614019 | Hard oil pipe 硬油管 | 1 | |
| 25 | 4900603006 | Joint 接头 | 2 | |
| 26 | 8500614020 | Hard oil pipe 硬油管 | 1 | |
| 27 | 8501313002 | shaft 轴 | 1 | |
| 28 | 8501302001 | Air cylinder 气缸 | 1 | |
| 29 | 2001302002 | Fork 铲叉 | 2 | |
| 30 | 8501302002 | Carriage 移动货叉架 | 1 | |

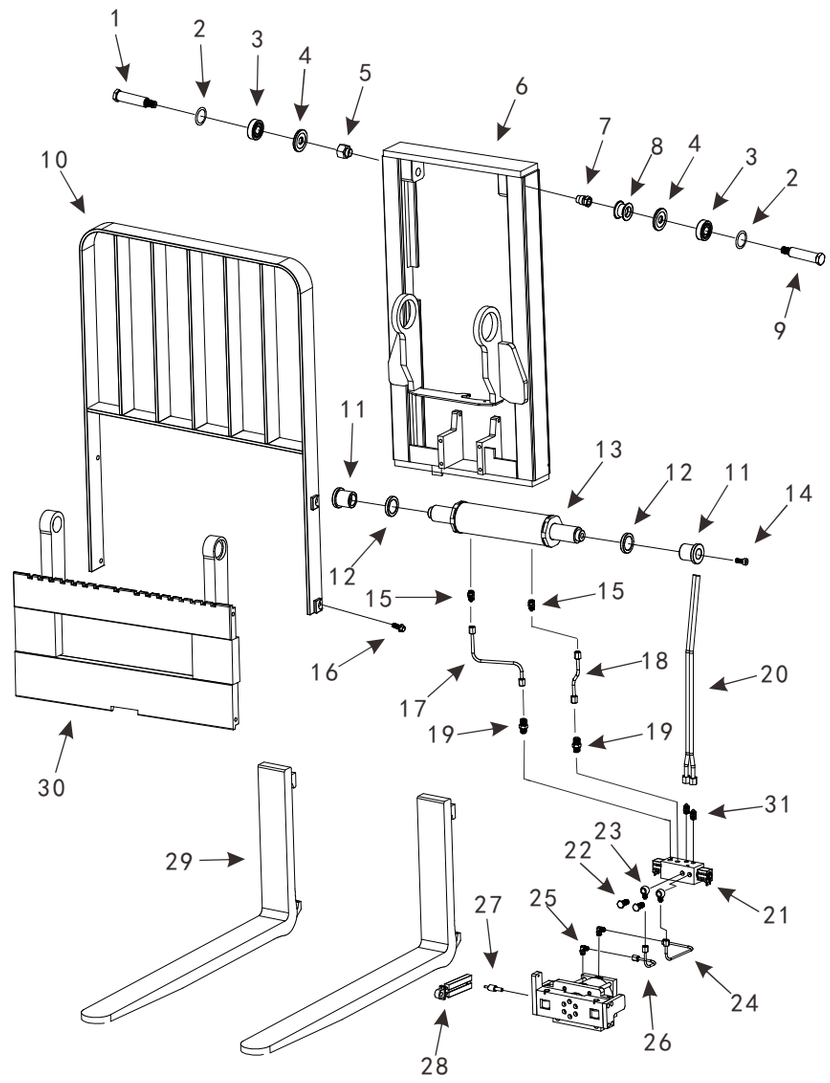


30

kupit-shtabeler.ru

## 图27/FIG.27 叉架和挡货架（侧移）/FORK&CARRIAGE&BACKREST(SIDESWAY)

| 序号 Item No | 图 号 Part No | 零部件名称 Description | 件数 Q'ty | 备 注 Remark |
|---|---|---|---|---|
| 31 | 9300603009 | Joint 接头 | 2 | |

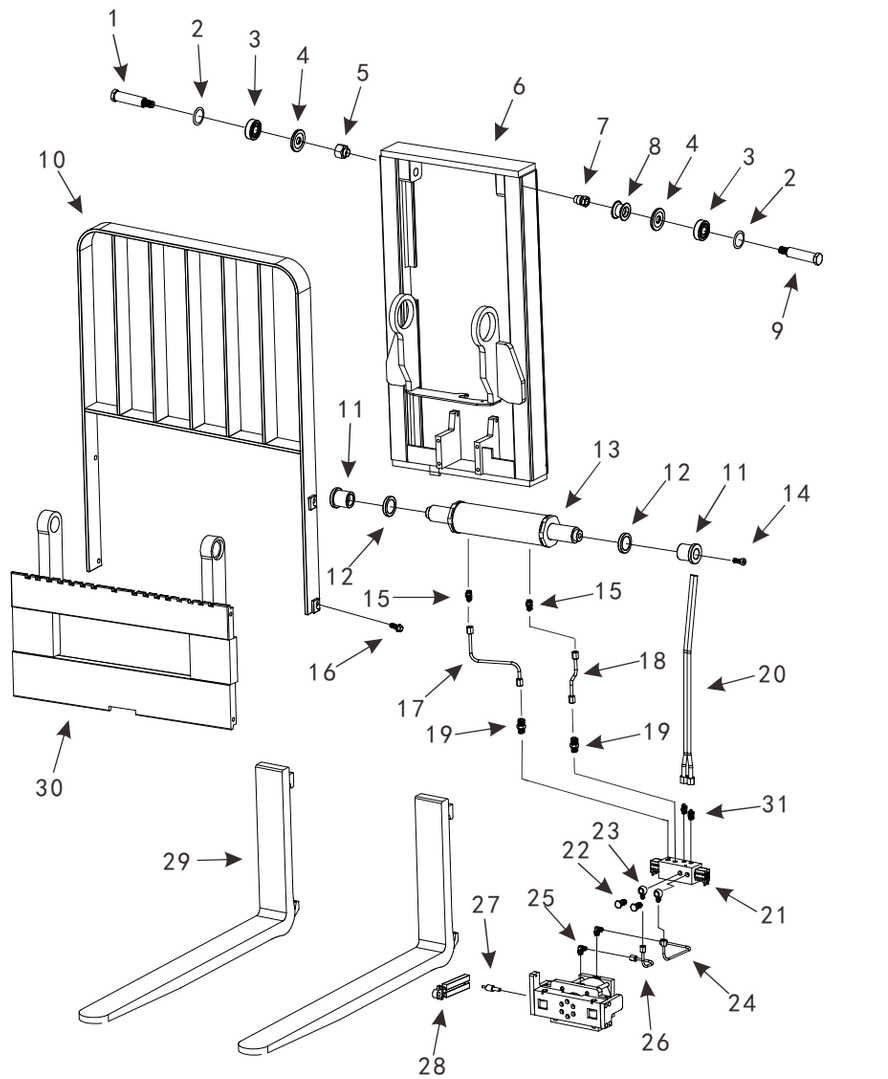

Купить штабелёр
kupit-shtabeler.ru +7 495 159-44-32 zakaz@kupit-shtabeler.ru
Справочная копия документа изготовителя. Масштаб исходных страниц сохранён.

## 图28/FIG.28 倾斜油缸总成（侧移）/INCLINE CYLINDER ASSEMBLY(SIDESWAY)

| 序号 Item No | 图号 Part No | 零部件名称 Description | 件数 Q'ty | 备注 Remark |
|---|---|---|---|---|
| 01 | 8600625001 | Screw 螺栓 | 4 | |
| 02 | 8500600007 | Incline cylinder 倾斜油缸 | 1 | |
| 03 | 8500813013 | Shaft 轴 | 2 | |
| 04 | 8500832007 | Wheel 轮子 | 2 | |
| 05 | 2000536001 | Pin 销子 | 2 | |
| 06 | 8500813014 | Shaft 轴 | 2 | |
| 07 | 8500802005 | Side plate 右侧板 | 1 | |
| 08 | 8500802004 | Knockout plate 油缸推板 | 1 | |
| 09 | 4000231001 | Screw 螺栓 | 6 | |
| 10 | 8500832008 | Wheel 轮子 | 2 | |
| 11 | 8500802003 | Side plate 左侧板 | 1 | |
| 12 | 8500802006 | Spacing plate 限位板 | 2 | |
| 13 | 1000342001 | Screw 螺栓 | 8 | |
| 14 | 8500802007 | Spacing plate 限位板 | 1 | |

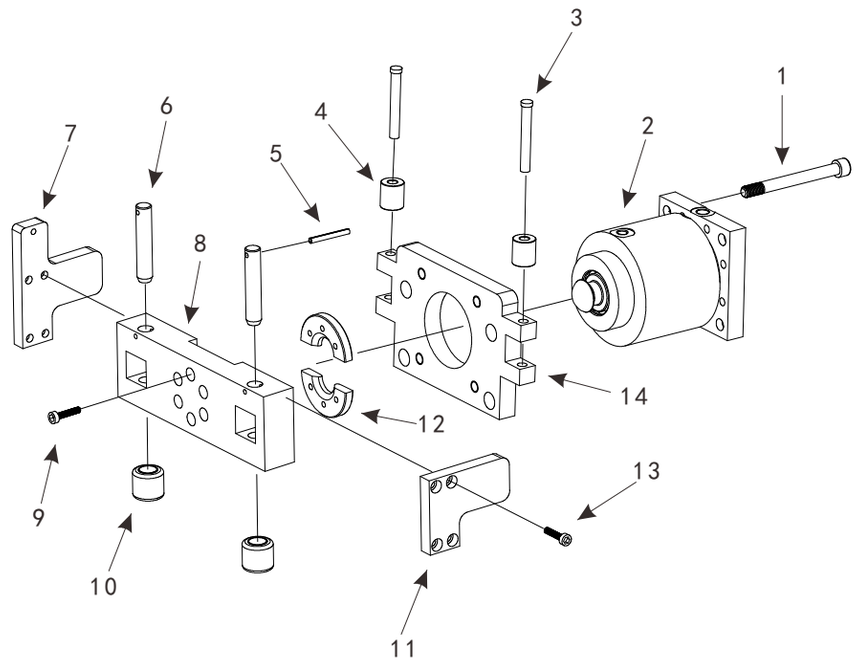

Купить штабелёр
kupit-shtabeler.ru +7 495 159-44-32 zakaz@kupit-shtabeler.ru
Справочная копия документа изготовителя. Масштаб исходных страниц сохранён.

## 图29/FIG.29 倾斜油缸总成/INCLINE CYLINDER ASSEMBLY

| 序号 Item No | 图号 Part No | 零部件名称 Description | 件数 Q'ty | 备注 Remark |
|---|---|---|---|---|
| 01 | 8700839001 | Nut 螺母 | 1 | |
| 02 | 8700828001 | O-ring 0型圈 | 1 | |
| 03 | 8500605001 | O-ring 0型圈 | 1 | |
| 04 | 8500605002 | O-ring 0型圈 | 1 | |
| 05 | 8700834004 | Supporting tach 支承环 | 1 | |
| 06 | 8700834005 | Seal washer 密封圈 | 1 | |
| 07 | 8700834006 | Dust ring 防尘圈 | 1 | |

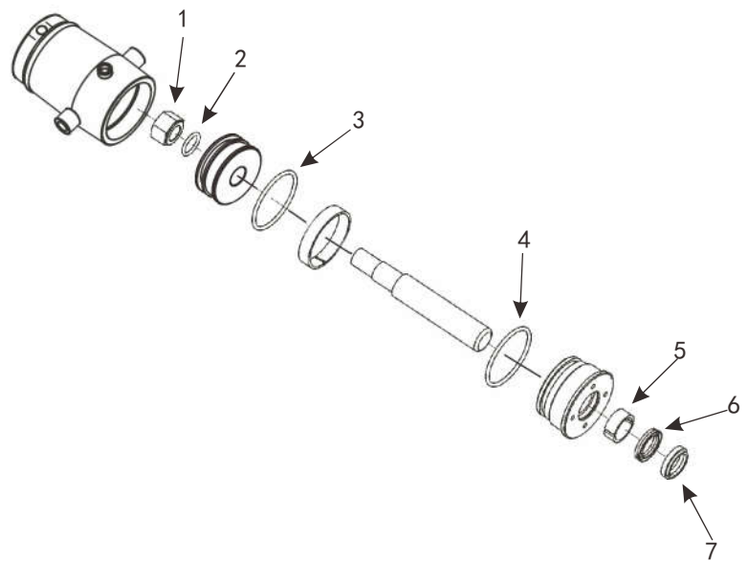

Купить штабелёр
kupit-shtabeler.ru +7 495 159-44-32 zakaz@kupit-shtabeler.ru
Справочная копия документа изготовителя. Масштаб исходных страниц сохранён.

## 图30/FIG.30 倾斜油缸（侧移）/INCLINE CYLINDER(SIDESWAY)

| 序号 Item No | 图号 Part No | 零部件名称 Description | 件数 Q'ty | 备注 Remark |
|---|---|---|---|---|
| 01 | 9300605001 | Dust ring 防尘圈 | 1 | |
| 02 | 9300605002 | Seal washer 密封圈 | 1 | |
| 03 | 9300605003 | Supporting tach 支承环 | 1 | |
| 04 | 8600612001 | Supporting tach 支承环 | 1 | |
| 05 | 8500604003 | Seal washer 密封圈 | 2 | |
| 06 | 8500604002 | O-ring 0型圈 | 1 | |

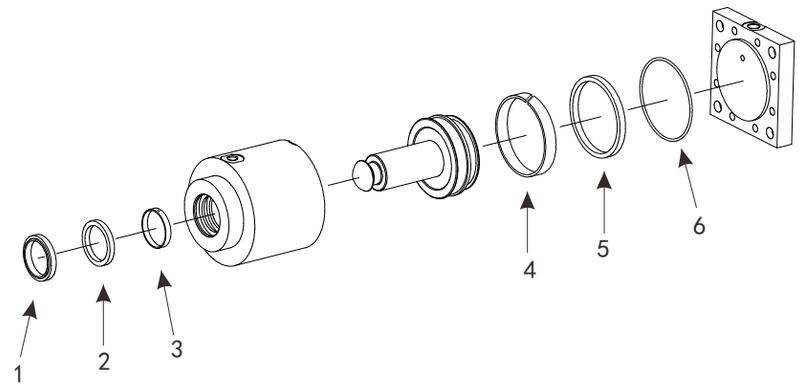

Купить штабелёр
kupit-shtabeler.ru +7 495 159-44-32 zakaz@kupit-shtabeler.ru
Справочная копия документа изготовителя. Масштаб исходных страниц сохранён.
kupit-shtabeler.ru

## 图31/FIG.31 电池组件/BATTERY ASSEMBLY

| 序号 Item No | 图号 Part No | 零部件名称 Description | 件数 Q'ty | 备注 Remark |
|---|---|---|---|---|
| 01 | 2001100021 | Charger (220V Europe criterion) | 1 | |
| | 2001100022 | Charger (220V USA criterion) 美标充电器 | 1 | |
| | 2001100023 | Charger (220V Australia criterion) 澳标充电器 | 1 | |
| | 2001100024 | Charger (220V Eng criterion) 英标充电器 | 1 | |
| | 2001100026 | Charger (110V USA criterion) 美标充电器 | 1 | |
| | 2001100027 | Charger (110V Australia criterion) 澳标充电器 | 1 | |
| | 2001100028 | Charger (110V Eng criterion) 英标充电器 | 1 | |
| | 2001100029 | Charger (110V Europe criterion) 欧标充电器 | 1 | |
| 02 | 9302400001 | Flying rings 充电线 | 1 | |
| 03 | 8501106001 | Battery(350Ah) 电瓶 | 1 | |
| | 8501106002 | Battery(270Ah) 电瓶 | 1 | |
| | 8501106003 | Battery(350Ah)(No leakage hole） | | |
| | | 电瓶（无漏液孔） | 1 | |
| | 8501106004 | Battery(270Ah)(No leakage hole） | | |
| | | 电瓶（无漏液孔） | 1 | |
| 04 | 2000830001 | Screw 防松螺栓 | 2 | |
| 05 | 1000131001 | Screw 螺栓 | 2 | |
| 06 | 2000937002 | Washer 平垫圈 | 2 | |
| | 2000937003 | Washer 弹簧垫圈 | 2 | |
| 07 | 2000537001 | Nut 螺母 | 2 | |
| 08 | 4601108001 | Cover 电线座盖 | 1 | |

